EN

Movement by Perfection



Axial fans

Main catalogue
2016 Edition

The Royal League in **ventilation**, control and drive technology

ZIEHL-ABEGG

Using air intelligently

Air is always there but is hardly perceived consciously. Directing air in a specific form of movement is the competence of ZIEHL-ABEGG. As the world's leading provider of fans with adapted control technology, ZIEHL-ABEGG relies on the efficiency and reliability of the products. With the trailblazing solutions from ZIEHL-ABEGG, customers use air and energy optimally for their individual requirements.

FANselect The fan selection program

With the first fully comprehensive certified fan selection program FANselect the customer can find the optimum fans and system components for his needs conveniently, precisely and quickly. The specified values conform to reality. They are determined in the ZIEHL-ABEGG InVent technology centre which houses the world's biggest combined air and noise test benches of the ventilation system branch. More information on www.fanselect.info



Other catalogues

In the ZIEHL-ABEGG catalogues, the reader can find out all about ZIEHL-ABEGG fans, motors and the perfectly adapted control technology. All the catalogues are available on www.ziehl-abegg.de website in the "Download" section.

Contents

The ZIEHL-ABEGG Company			Page 4
Axial fan FE2owlet-ECblue	sickle-shaped and profiled blades made of high performance composite material or aluminium, optimised for full bell mouth, with highly efficient EC motor		Page 18
Axial fan FE2owlet	sickle-shaped and profiled blades made of high performance composite material or aluminium, optimised for full bell mouth		Page 140
Axial fan FE2owlet-ECblue with ZAplus	Axial fan FE2owlet-ECblue in optimised full bell mouth with guiding vane, motor suspension and short diffusor		Page 278
Axial fan FE2owlet with ZAplus	Axial fan FE2owlet in optimised full bell mouth with guiding vane, motor suspension and short diffusor		Page 354
System components			Page 430
Control technology			Page 446
General notes			Page 520
Ziehl-Abegg global			Page 539


ZIEHL-ABEG
Die Königskla
der Lufttechnik,
Regeltechnik und Antriebstechni
Radialventilator
ZAmid® Technologie

Welcome to the world of ZIEHL-ABEGG





Top technology “Made by ZIEHL-ABEGG”

A pioneering spirit and the courage of innovation were the driving forces behind Emil Ziehl’s development of his first external rotor motor over a hundred years ago. With this he laid the corner stone for the success story of ZIEHL-ABEGG in 1910. Today, the family company ZIEHL-ABEGG, with its headquarters in Künzelsau, develops, produces and sells high quality, high-tech components: Fans, special electric motors and their perfectly adapted, state-of-the-art control technology. Still today, Emil Ziehl’s pioneering spirit is the motivator for making good even better and finding new, revolutionary solutions. ZIEHL-ABEGG is based in Southern Germany but is at home all over the world. At the worldwide production and sales sites, thousands of employees develop, produce and sell technical, economical and ecological progress.

Welcome to the world of ventilation, control and drive technology.

One-stop expertise



Fan, motor and control technology

Whether air conditioning, drying, cooling or ventilating, the efficient fans with adapted drive and control technology from ZIEHL-ABEGG cope with these tasks safely and reliably. Individual and also complex customer requirements are welcome challenges.

At ZIEHL-ABEGG headquarters in Künzelsau, more than 300 engineers and technicians concentrate daily on finding the best solution. In the InVent, one of the most modern technology centres of its kind, they work on the innovations of the future. Their ideas are put into practice by excellently trained specialists on state-of-the-art plants. The production as well as all processes are accompanied by prudent quality management. ZIEHL-ABEGG products are subjected to rigorous testing before being put into operation at the customer's. On the world's biggest air and noise test bench, vibrations and external noises are eliminated and thus ensure top class fan measurements in accordance with ISO and DIN. The result is top class products and services which are marked by the seals "Premium Quality" and "Premium Efficiency".

The world's most modern and largest test-bench for fans at the main location in Künzelsau

Right picture:
Most modern production lines for fans with the highest demands in the world

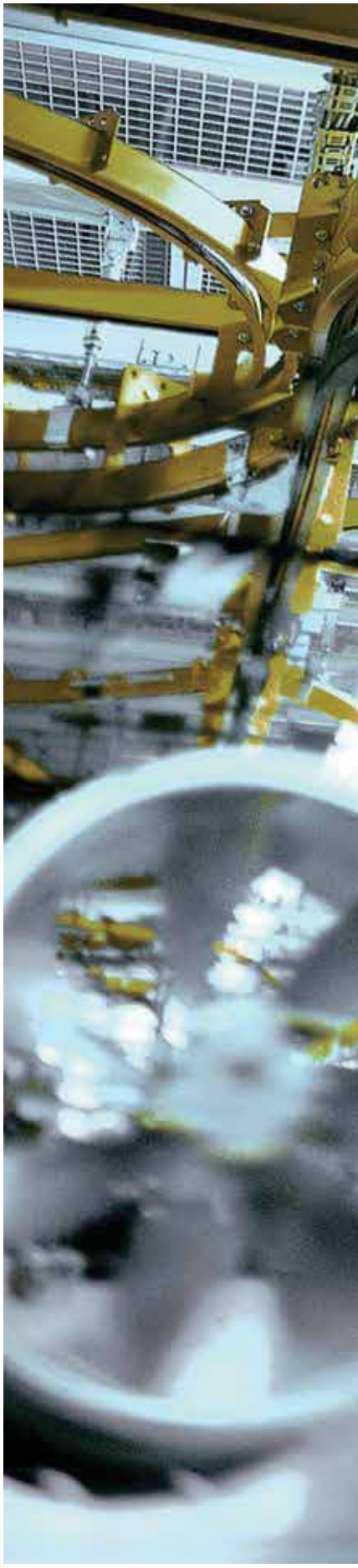



EC fans of the Royal League

Quiet, efficient, environmentally friendly

EC fans from ZIEHL-ABEGG unite state-of-the-art motor technology with innovative aerodynamics. This symbiosis scores high marks by merging revolutionary ECblue technology with premium fans. The result is efficiency and absolutely economical operation. The new generation of axial fans heads the ECblue technology: The FE2owlet has bionically designed rotor blades for almost noiseless conveyance of air. Moreover, the FE2owletbio is made from 100% recyclable bio-polyamides. Further highlights of material development at ZIEHL-ABEGG are shown in the Cpro centrifugal fan with the new ZAmid® technology. The new high performance composite material is as hard as steel but only half the weight. This is kind on the bearings and saves energy. Greater efficiency also comes from the newly developed blade geometry in the centrifugal impellers which has only become possible thanks to the innovative composite material. In standard application, EC-fans achieve maximum volume flows with extraordinary efficiency despite their low noise. Together with the ECblue motors, ZIEHL-ABEGG fans achieve a dynamic response which makes them absolute leaders in environmental friendliness and efficiency.

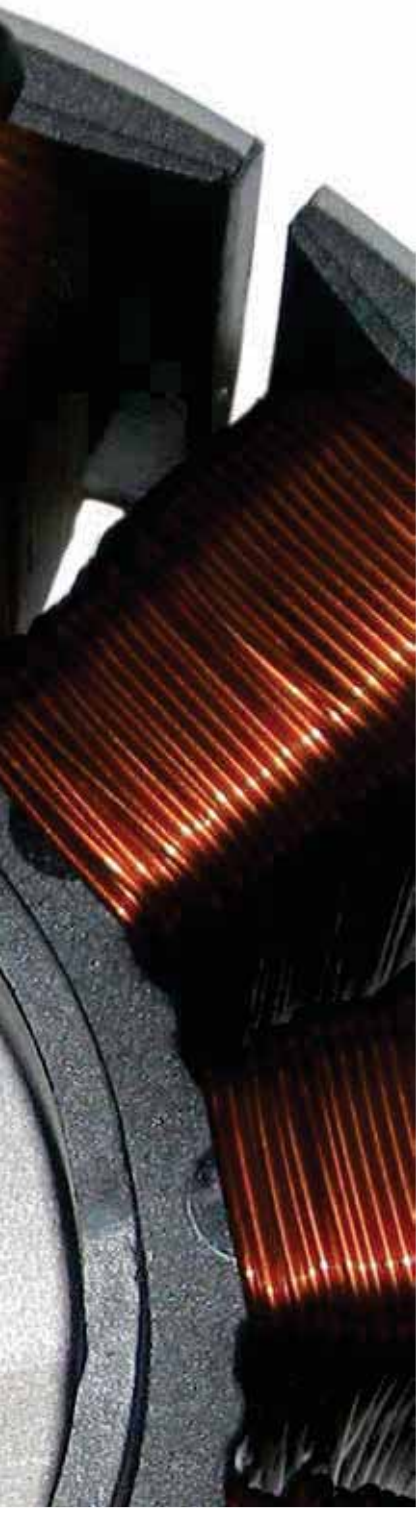

ECblue motor technology





Maximum efficiency and minimum consumption
ECblue with the latest Z A *mid*® *Technology*
Radial fans sector



Unique bionic profile FE2owlet,
combined with ECblue technology

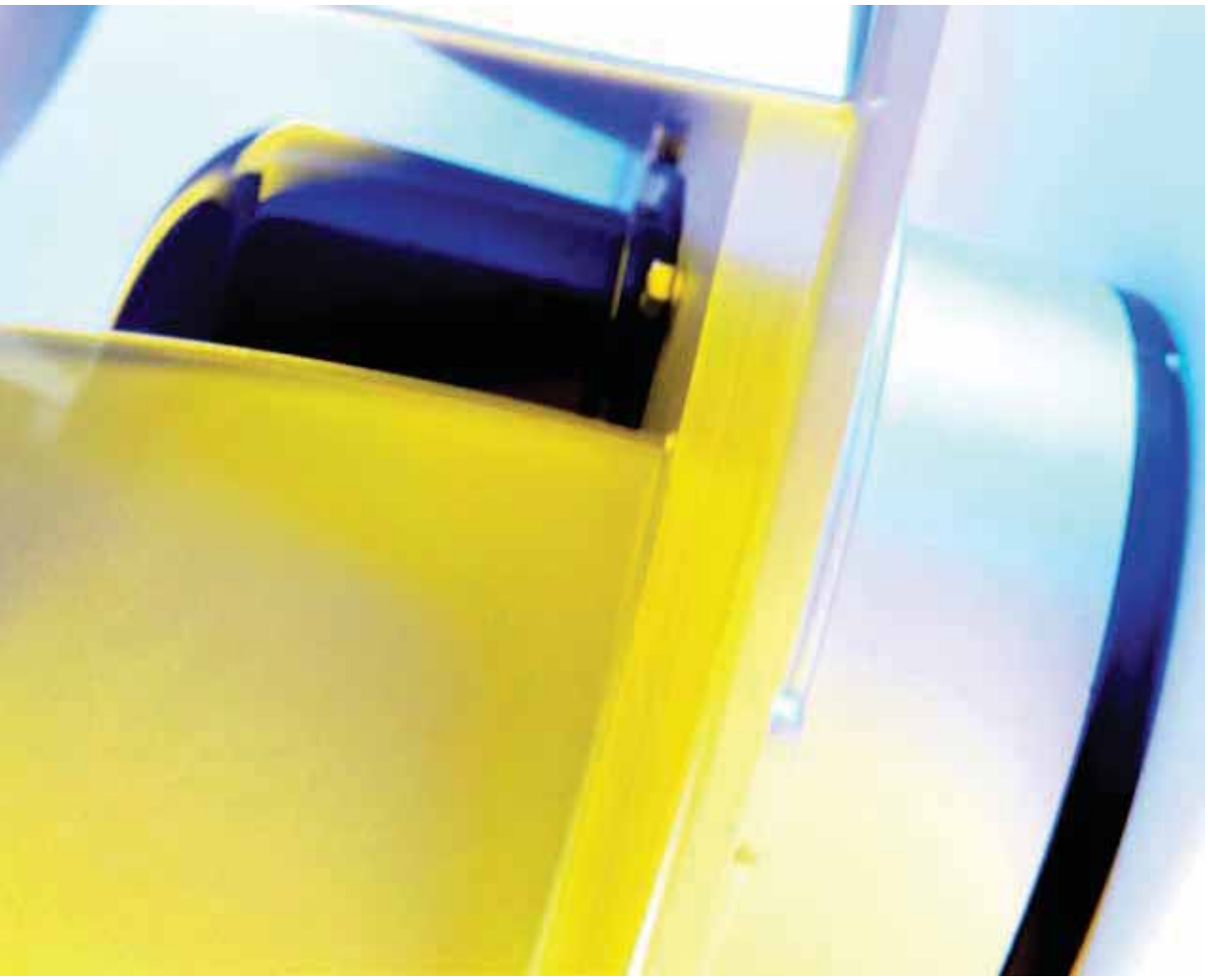

AC-fans of the Royal League



Strong, robust, extraordinary

In all applications in which the material is exposed to immense stress, the AC fans from ZIEHL-ABEGG demonstrate their quality and ability. Their solid components and robust design and technology are able to withstand even the greatest stresses. The fans are therefore used in many different areas of industry or agriculture - wherever absolute insensitivity and stability is important.

The high quality motor technology is the result of decades of experience at ZIEHL-ABEGG. Intelligently used components such as the Fcontrol frequency inverter make them environmentally friendly and efficient key players. Maintenance-free and extraordinarily performant, AC fans from ZIEHL-ABEGG are a safe and rewarding investment.

AC motor technology, robust in operation

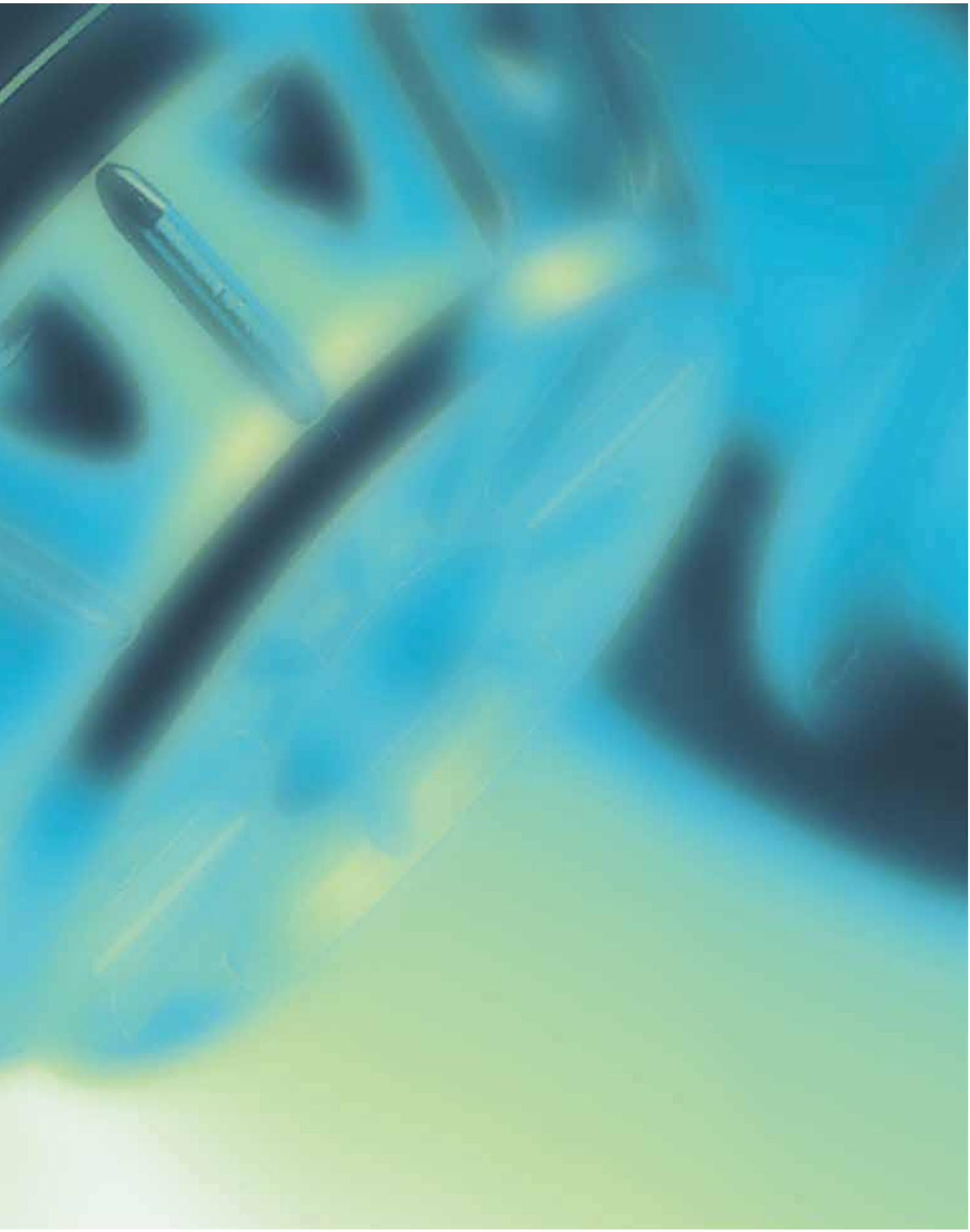

Expertise in ventilation

ErP directive

With the Kyoto protocol, the European Union pledged to reduce CO_2 emissions by at least 20 per cent by the year 2020. One measure for achieving this is the ErP directive for improved energy efficiency and general environmental compatibility of electrical equipment – also known in Germany as the Eco Design directive. It supports a resource-friendly and energy-efficient product design. With the implementation of the ErP directive, stricter efficiency requirements for fans in the output range from 125 W to 500 kW apply since 2013 and 2015 in two stages. A further stage is planned for 2020. Energy efficiency is thus given the same standing as the compliance with the low voltage or EMC directive. The system efficiency requirement is a prerequisite for a CE mark and is thus essential for a product to be used in EU member states. An own label as for refrigerators is not planned for fans because the fan manufacturers do not usually have any influence on the installation conditions.

Products for use in EU countries and world-wide markets are listed in this catalogue. For the fans for the EU countries, the respective ErP identification is included directly in the description of the fan.

The **E**uropean **V**entilation **I**ndustry **A**ssociation (EVIA) represents the European ventilation industry with national and European institutions.
The EVIA is the key platform for fan manufacturers and is their interface to politicians, decision-makers in the European Union, and other associations that use fans in their products. The EVIA supports the use of high efficiency fans in Europe to implement the EU targets for increased efficiency.
ZIEHL-ABEGG played a leading role in its foundation and supports the EVIA with active involvement in its working groups. ZIEHL-ABEGG also provides the chairman.

Selection of fans step by step

1. Axial fans overview

Get an initial overview of our axial fans and navigate quickly to the section of the catalogue relevant for you.



2. Quick selection

Obtain product details quickly and easily, thanks to quick selection using the volume flow rate and the volume flow rate technical data.

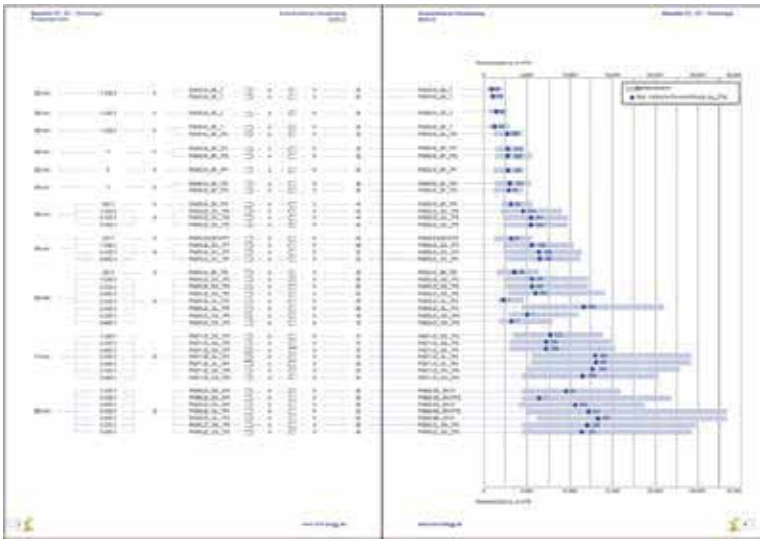

3. Product details

The double product page contains all relevant product information for your selected fan.

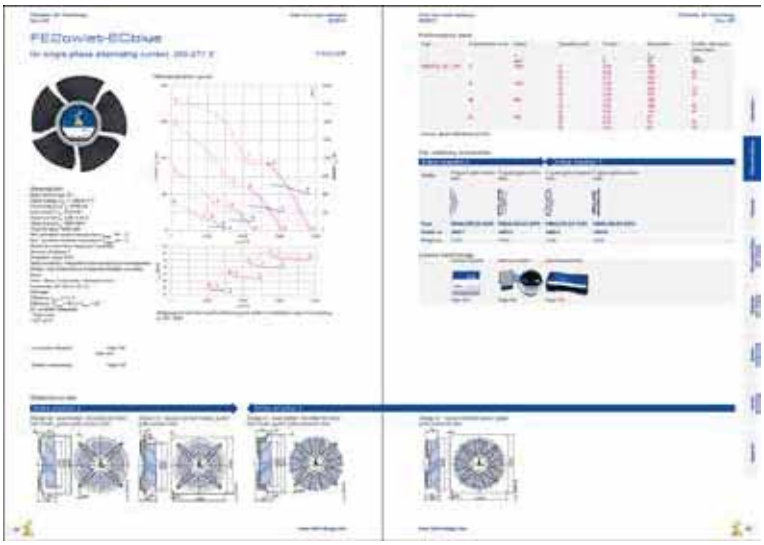

Technical description

FE2owlet



Product specification

Fluted, sickle-shaped blades based on bionic insights. Available sizes 250 - 1,250 mm, volume flow rates up to 53,750 m³/h and static pressure increase up to 418 Pa.

Properties and special features

- Low operating costs due to optimum efficiency with minimum noise levels
- High flexibility due to 100% speed controllable volume flow rate
- Very smooth running and long service life due to dynamic balancing in two levels
- Compact dimensions for every installation situation
- Compliant with ERP directive 2015
- Numerous approvals (incl. VDE, UL, CCC, EAC, CE)

Motor concepts

External rotor motors

- ECblue EC technology with integrated controller matched to the fan
- AC technology

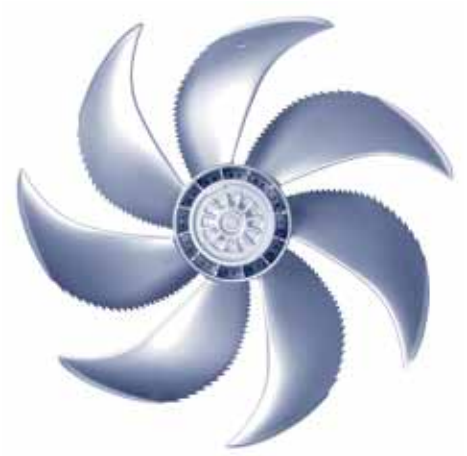

Technical description

FE2owlet with ZAplus



Product specification

Optimised full bell mouth with guiding vane, motor suspension and short diffusor. Fluted, sickle-shaped blades based on bionic insights. Available sizes 450 - 910 mm, volume flow rates up to 36,500 m^3/h and static pressure increase up to 420 Pa.

Properties and special features

- Intelligent ventilation system with built-in efficiency guarantee
- Lowest operating costs due to optimum efficiency with minimum noise levels due to bionic blade design and aerodynamically optimised ZAplus nozzle
- High level of flexibility due to 100% speed controllable volume flow rate
- High corrosion protection with corrosion-free nozzle made of high performance composite material
- Very smooth running and long service life due to dynamic balancing in two levels
- Air handling capacity possible with diffusor kit (ZAplus+)
- Minimal handling effort as no packaging needed
- Compliant with ERP directive 2015
- Numerous approvals (incl. VDE, UL, CCC, EAC, CE)

Motor concepts

External rotor motors

- ECblue EC technology with integrated controller matched to the fan
- AC technology



Type key

Necessary ordering information
Type and Art. no.

Example
Type: FN050-4EQ.4I.A7P1
Art. no.: 140084



Axial fan	
FN	
ZN	
Size code	
Impeller diameter 450 mm	045
Impeller diameter 500 mm	050
and so on	
Number of poles	
2-pole	2
4 pole	4
4-4 pole	V
6 pole	6
6-6 pole	S
8 pole	8
8-8 pole	A
10 pole	Z
10-10 pole	M
12-12 pole	N
Type of current	
three phase alternating current	D
single phase alternating current	E
External rotor EC motor with controller	I
Fan design	
without mounting parts	A
Full bell mouth	
rectangular	Q
round	L
pipe socket	
with one flange	H
flange ring	
with two flanges	F
Axial screwed suspension	
for full bell mouth Q and L / conveying direction A	D
für Kurzdüse E / Förderrichtung A	W
for short bell mouth E / conveying direction V	K
On nozzle flange for pipe fitting H for full nozzle Q or L / airflow direction V	I
Centrifugal screwed suspension	
On outer diameter for full nozzle Q or L / airflow direction V	S
Motor	
Airflow direction	
Sucking over stator	A
Blowing over stator	V
Number of blades	
7	
Blade angle	
P	
Blade index	
1	

Selection programme FANselect

The world's best selection program for fans

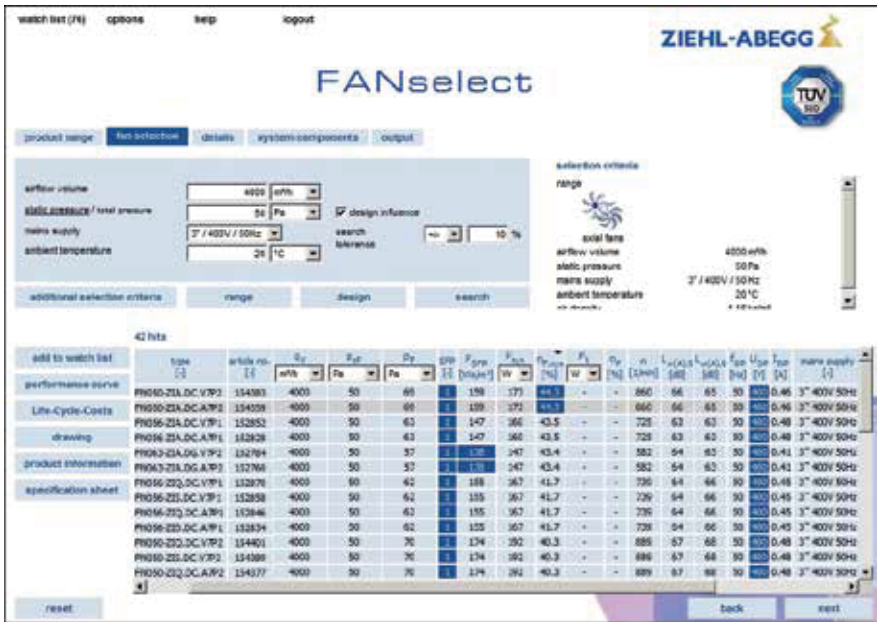

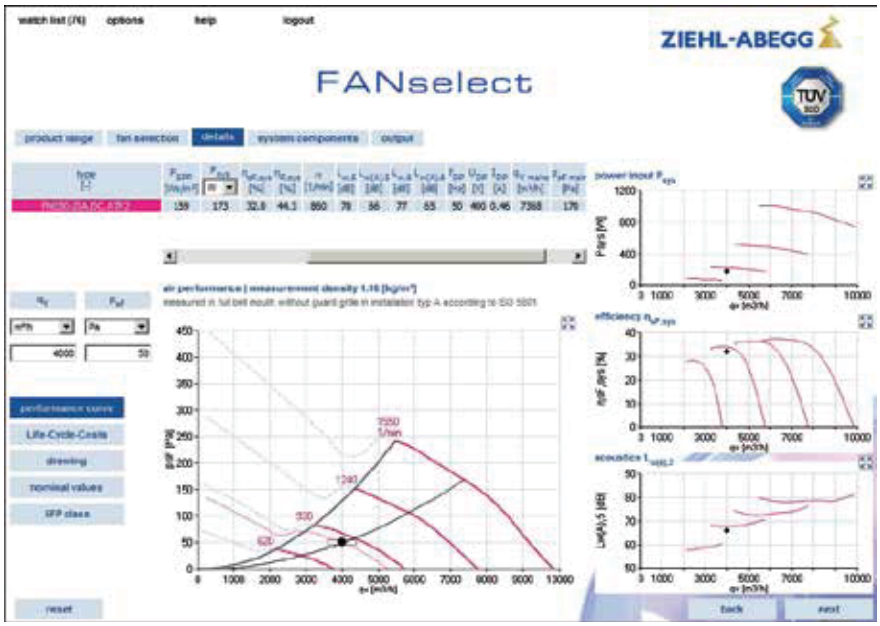

At www.fanselect.info, we are offering you FANselect, a selection program for axial and centrifugal fans with the matching system components.

With FANselect, you can, for instance, select and calculate the fans listed in this catalogue. FANselect provides you with an option to calculate the efficiency, the acoustics, the SFP and much more. In addition, you can also select the matching systems components. You can conveniently save your configuration in a file or print it out.

The FANselect selection program, including the customer DLL, is available for you to download at any time at www.fanselect.info.





FE2owlet-ECblue
EC-Technology

Product overview

Quick selection	Seite 20
Size 250	Seite 24
Size 300	Seite 28
Size 350	Seite 32
Size 400	Seite 36
Size 420	Seite 38
Size 450	Seite 40
Size 500	Seite 50
Size 560	Seite 58
Size 630	Seite 66
Size 710	Seite 82
Size 800	Seite 96
Size 910	Seite 110
Size 1000	Seite 124
Size 1250	Seite 132

Baugröße	Spannung	Typ	Luftförderrichtung		ErP	Seite
250	1~200-277 V	FN025-6I_.0B._7	A	V	-	24
		FN025-6I_.0E._7	A	V	2015	26
300	1~200-277 V	FN030-6I_.0E._7	A	V	2015	28
		FN030-6I_.BA._7P2	A	V	2015	30
350	1~200-277 V	FN035-6I_.0E._7	A	V	-	32
		FN035-6I_.BA._7P2	A	V	2015	34
400	1~200-277 V	FN040-6I_.BD._7P1	A	V	2015	36
420	1~200-277 V	FN042-6I_.BD._7P1	A	V	2015	38
450	1~200-277 V	FN045-6I_.BD._7P2	A	V	2015	40
		FN045-6I_.BD._7P3	A	V	2015	42
		FN045-ZI_.DC._5P4	A	V	2015	44
	3~380-480 V	FN045-ZI_.DC._5P4	A	V	2015	46
500	1~200-277 V	FN050-6I_.BD._7P2	A	V	2015	48
		FN050-ZI_.DC._7P2	A	V	2015	50
	3~200-240 V	FN050-ZI_.DC._7P2	A	V	2015	52
	3~380-480 V	FN050-ZI_.DC._7P2	A	V	2015	54
560	1~200-277 V	FN056-6I_.BD._5P4	A	V	2015	56
		FN056-ZI_.DC._5P4	A	V	2015	58
	3~200-240 V	FN056-ZI_.DC._5P4	A	V	2015	60
	3~380-480 V	FN056-ZI_.DC._5P4	A	V	2015	62
630	1~200-277 V	FN063-6I_.BD._7P2	A	V	2015	64
		FN063-ZI_.DG._7P2	A	V	2015	66
	3~200-240 V	FN063-ZI_.DG._7P2	A	V	2015	68
		FN063-ZI_.GG._7P3	A	V	2015	70
		FN063-ZI_.GL._7P3	A	V	2015	72
	3~380-480 V	FN063-ZI_.DG._7P2	A	V	2015	74
		FN063-ZI_.GG._7P3	A	V	2015	76
		FN063-ZI_.GL._7P3	A	V	2015	78
710	1~200-277 V	FN071-6I_.BD._7P3	A	V	2015	80
		FN071-ZI_.DG._7P3	A	V	2015	82
	3~200-240 V	FN071-ZI_.DG._7P3	A	V	2015	84
		FN071-ZI_.GG._7P4	A	V	2015	86
		FN071-ZI_.GL._7P4	A	V	2015	88
	3~380-480 V	FN071-ZI_.DG._7P3	A	V	2015	90
		FN071-ZI_.GG._7P4	A	V	2015	92
		FN071-ZI_.GL._7P4	A	V	2015	94
800	1~200-277 V	FN080-ZI_.DG._5P4	A	V	2015	96
		FN080-ZI_.DG._5P4	A	V	2015	98
	3~200-240 V	FN080-ZI_.GG._7P3	A	V	2015	100
		FN080-ZI_.GL._7P3	A	V	2015	102
	3~380-480 V	FN080-ZI_.DG._5P4	A	V	2015	104
		FN080-ZI_.GG._7P3	A	V	2015	106
		FN080-ZI_.GL._7P3	A	V	2015	108

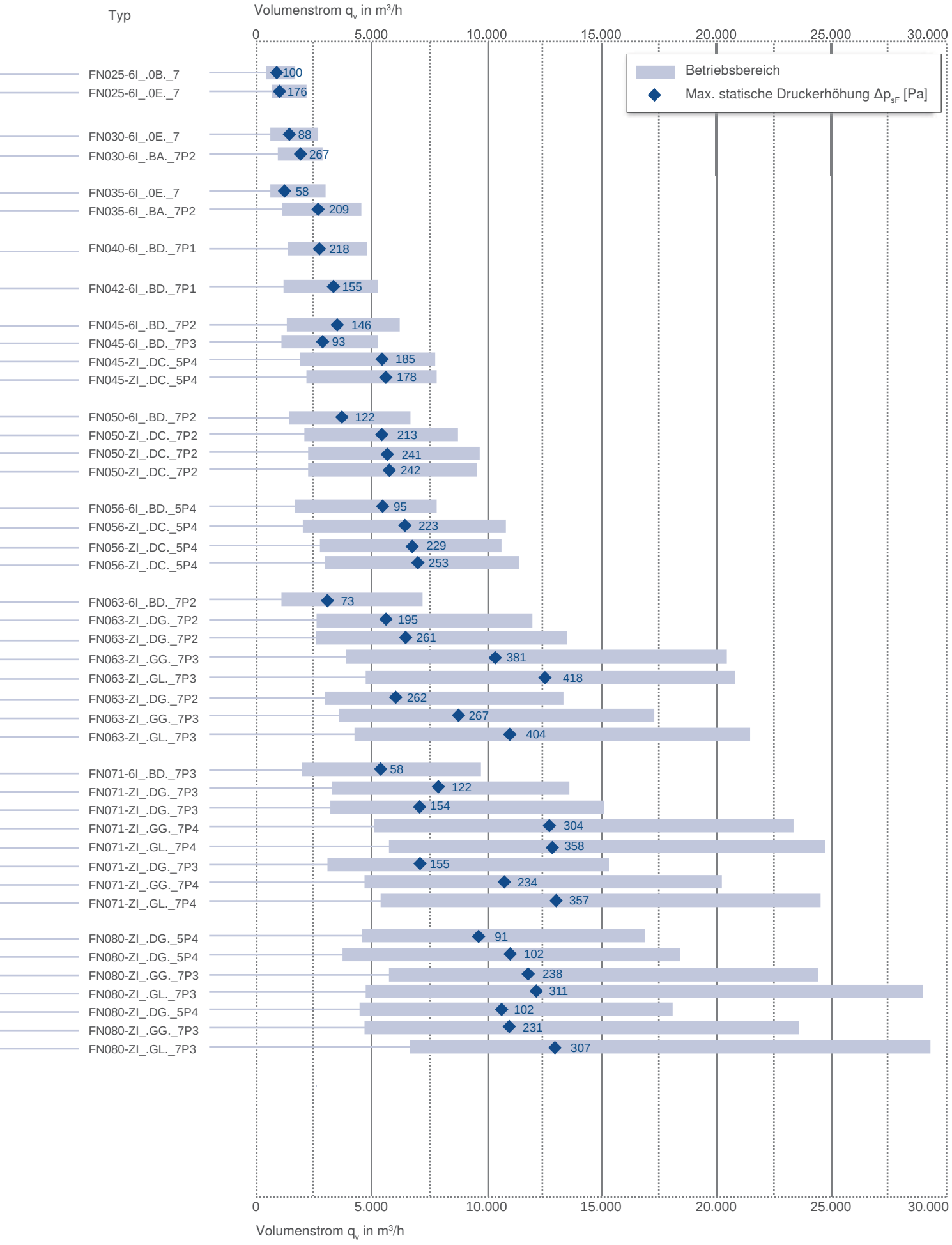
Typ
Volumenstrom q_v in m³/h
0
5.000
10.000
15.000
20.000
25.000
30.000
Betriebsbereich
Max. statische Druckerhöhung Δp_{sF} [Pa]
FN025-6I_.0B._7
100
FN025-6I_.0E._7
176
FN030-6I_.0E._7
88
FN030-6I_.BA._7P2
267
FN035-6I_.0E._7
58
FN035-6I_.BA._7P2
209
FN040-6I_.BD._7P1
218
FN042-6I_.BD._7P1
155
FN045-6I_.BD._7P2
146
FN045-6I_.BD._7P3
93
FN045-ZI_.DC._5P4
185
FN045-ZI_.DC._5P4
178
FN050-6I_.BD._7P2
122
FN050-ZI_.DC._7P2
213
FN050-ZI_.DC._7P2
241
FN050-ZI_.DC._7P2
242
FN056-6I_.BD._5P4
95
FN056-ZI_.DC._5P4
223
FN056-ZI_.DC._5P4
229
FN056-ZI_.DC._5P4
253
FN063-6I_.BD._7P2
73
FN063-ZI_.DG._7P2
195
FN063-ZI_.DG._7P2
261
FN063-ZI_.GG._7P3
381
FN063-ZI_.GL._7P3
418
FN063-ZI_.DG._7P2
262
FN063-ZI_.GG._7P3
267
FN063-ZI_.GL._7P3
404
FN071-6I_.BD._7P3
58
FN071-ZI_.DG._7P3
122
FN071-ZI_.DG._7P3
154
FN071-ZI_.GG._7P4
304
FN071-ZI_.GL._7P4
358
FN071-ZI_.DG._7P3
155
FN071-ZI_.GG._7P4
234
FN071-ZI_.GL._7P4
357
FN080-ZI_.DG._5P4
91
FN080-ZI_.DG._5P4
102
FN080-ZI_.GG._7P3
238
FN080-ZI_.GL._7P3
311
FN080-ZI_.DG._5P4
102
FN080-ZI_.GG._7P3
231
FN080-ZI_.GL._7P3
307
0
5.000
10.000
15.000
20.000
25.000
30.000
Volumenstrom q_v in m³/h

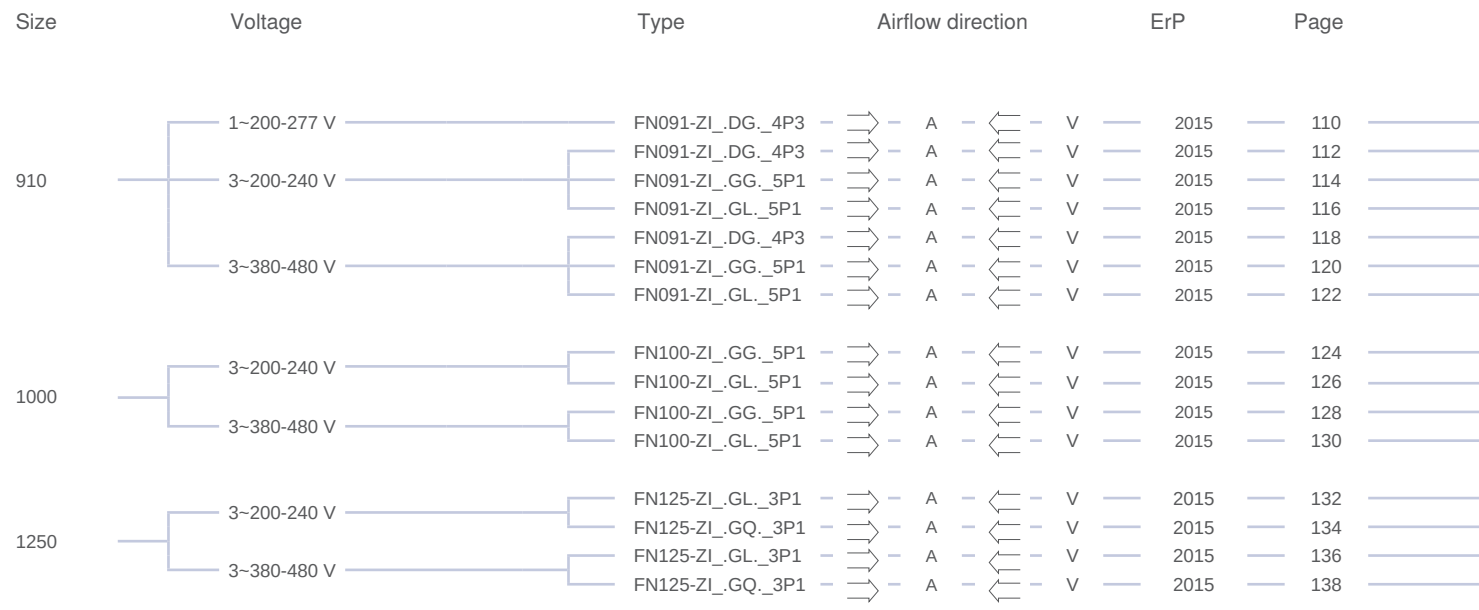
Size
Voltage
Type
Airflow direction
ErP
Page
910
1~200-277 V
3~200-240 V
3~380-480 V
1000
3~200-240 V
3~380-480 V
1250
3~200-240 V
3~380-480 V
FN091-ZI_.DG._4P3 A V 2015 110
FN091-ZI_.DG._4P3 A V 2015 112
FN091-ZI_.GG._5P1 A V 2015 114
FN091-ZI_.GL._5P1 A V 2015 116
FN091-ZI_.DG._4P3 A V 2015 118
FN091-ZI_.GG._5P1 A V 2015 120
FN091-ZI_.GL._5P1 A V 2015 122
FN100-ZI_.GG._5P1 A V 2015 124
FN100-ZI_.GL._5P1 A V 2015 126
FN100-ZI_.GG._5P1 A V 2015 128
FN100-ZI_.GL._5P1 A V 2015 130
FN125-ZI_.GL._3P1 A V 2015 132
FN125-ZI_.GQ._3P1 A V 2015 134
FN125-ZI_.GL._3P1 A V 2015 136
FN125-ZI_.GQ._3P1 A V 2015 138

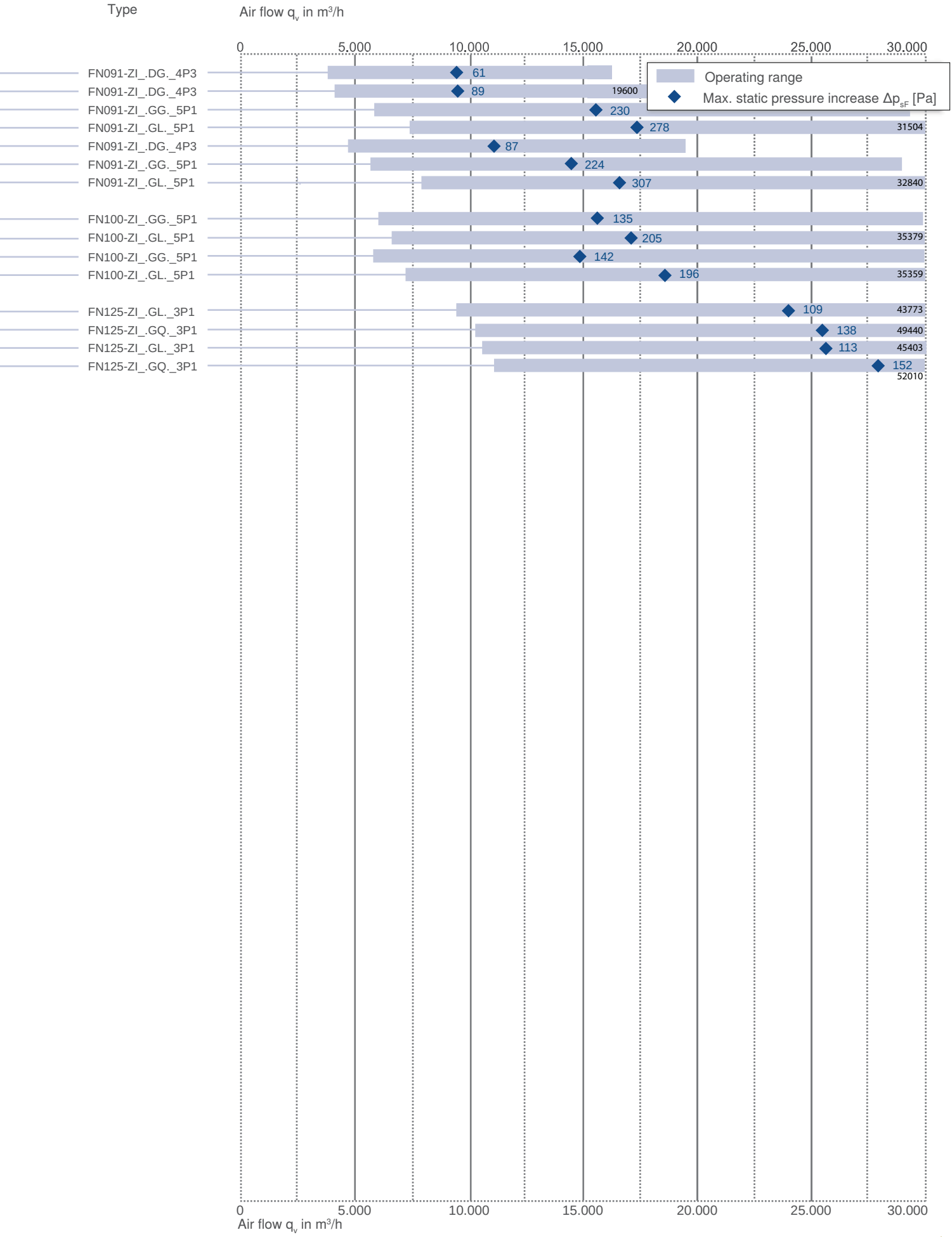
Type
Air flow q_v in m³/h
0
5.000
10.000
15.000
20.000
25.000
30.000
Operating range
Max. static pressure increase Δp_{sF} [Pa]
FN091-ZI_.DG._4P3
FN091-ZI_.DG._4P3
FN091-ZI_.GG._5P1
FN091-ZI_.GL._5P1
FN091-ZI_.DG._4P3
FN091-ZI_.GG._5P1
FN091-ZI_.GL._5P1
FN100-ZI_.GG._5P1
FN100-ZI_.GL._5P1
FN100-ZI_.GG._5P1
FN100-ZI_.GL._5P1
FN125-ZI_.GL._3P1
FN125-ZI_.GQ._3P1
FN125-ZI_.GL._3P1
FN125-ZI_.GQ._3P1
61
89
19600
230
278
31504
87
224
307
32840
135
205
35379
142
196
35359
109
43773
138
49440
113
45403
152
52010

FE2owlet-EC blue

for single phase alternating current, 200-277 V

FN025



Description

Motor technology: EC
Rated voltage U_N: **1~ 200-277 V***
Rated frequency f_N: **50/60 Hz***
Input power P_{sys}: **110 W***
Rated current I_N: **0.90- 0.65 A***
Rated speed n_N: **2580 min^{-1}***
Thermal class: **THCL155***
Min. permitted ambient temperature $t_{R(min)}$: -25 °C
Max. permitted ambient temperature $t_{R(max)}$: 60 °C
Electrical connection: Integrated controller with attached cable
Number of blades: 7
Protection class: IP44
Motor protection: Integrated active temperature management
Blades: High Performance Composite Material, uncoated, black
Rotor: Steel, powder-coated, ultramarine blue
Conformity: CE
ErP-data
Not subject to the regulations of ErP directive (P_1< 125 W)
* Rated data

Characteristic curve

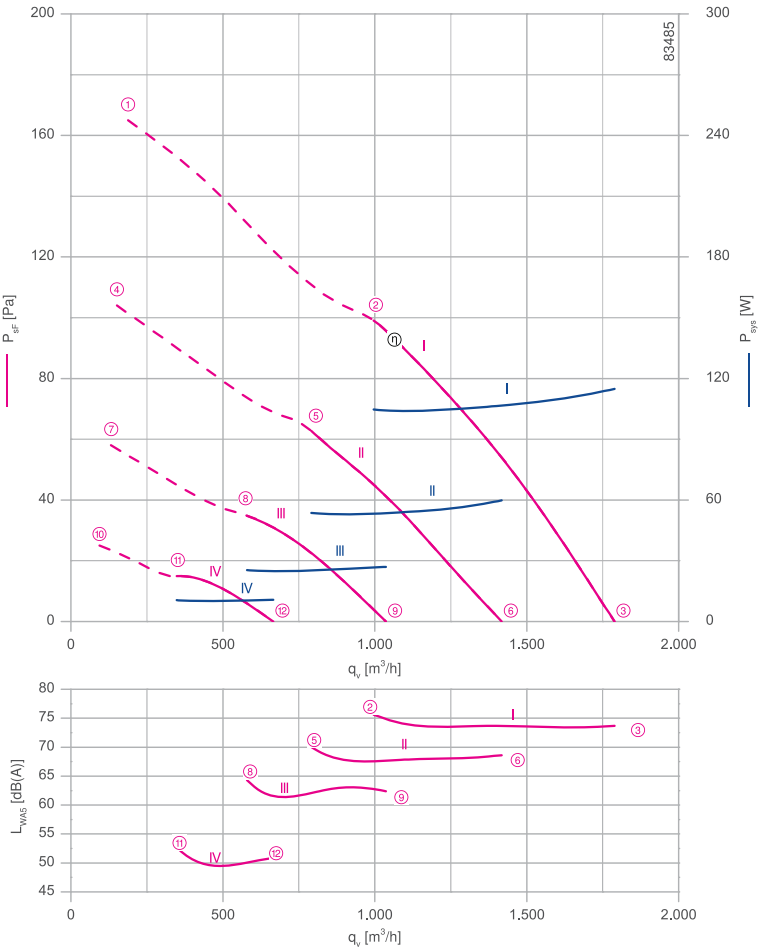

Measured in full bell mouth without guard grille in installation type A according to ISO 5801

Connection diagram Page 528
KT00036A

System components Page 430

Dimensions mm

Airflow direction A

Design D - axial bolted, suspension for full bell mouth, guard grille suction side

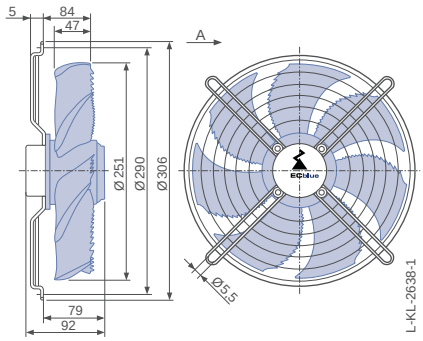

Design L - round full bell mouth, guard grille suction side

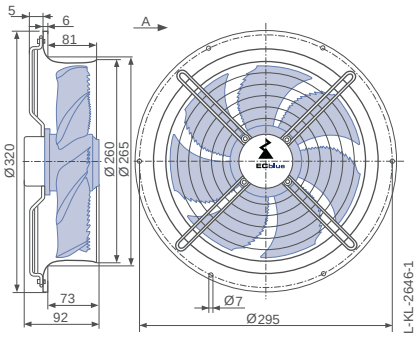

Airflow direction V

Design K - axial bolted, mounted for short bell mouth, guard grille pressure side

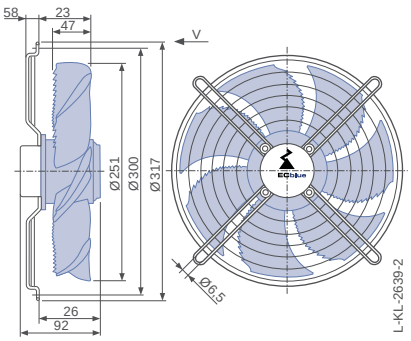

Performance data

Type	Characteristic curve	Torque %	Operating point	Current I A	Input power P_{sys} W	Suction side sound power level L_{WA5} dB(A)
FN025-6I_.0B._7	I	100	①	0.64	90	
		100	②	0.72	100	76
		100	③	0.78	110	74
	II	80	④	0.35	46	
		80	⑤	0.40	55	70
		80	⑥	0.44	60	69
	III	60	⑦	0.19	22	
		60	⑧	0.21	26	64
		60	⑨	0.22	28	62
	IV	40	⑩	0.11	10	
		40	⑪	0.11	10	51
		40	⑫	0.12	11	51

Current values determined at 230V

Fan ordering information

Airflow direction A			Airflow direction V		
Design	D (guard grille suction side)	L (guard grille suction side)	K (guard grille pressure side)	I (guard grille pressure side)	H (guard grille pressure side)
		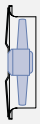			
Type	**FN025-6ID.0B.A7**	**FN025-6IL.0B.A7**	**FN025-6IK.0B.V7**	**FN025-6II.0B.V7**	**FN025-6IH.0B.V7**
Article no.	**140029**	**140033**	**140049**	**140041**	**140045**
Weight kg	2.50	3.50	2.90	2.50	3.50

Control technology

Control modules



Page 452

Design I - axial bolted, mounting for bell mouth flange, guard grille pressure side

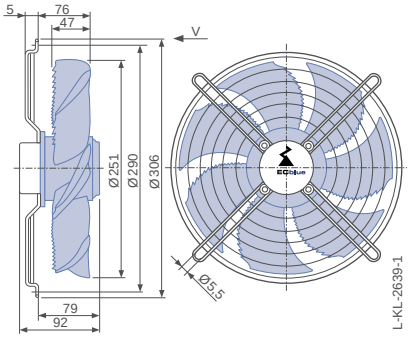

Design H - pipe sockets with a flange, guard grille pressure side

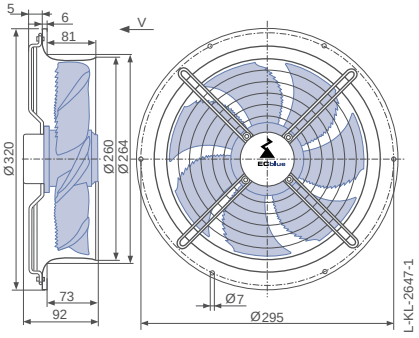

FE2owlet-EC blue

for single phase alternating current, 200-277 V

FN025



Description

Motor technology: EC
Rated voltage U_N: **1~ 200-277 V***
Rated frequency f_N: **50/60 Hz***
Input power P_{sys}: **230 W***
Rated current I_N: **1.65- 1.20 A***
Rated speed n_N: **3250 min^{-1}***
Thermal class: **THCL155***
Min. permitted ambient temperature $t_{R(min)}$: -25 °C
Max. permitted ambient temperature $t_{R(max)}$: 60 °C
Electrical connection: Integrated controller with attached cable
Number of blades: 7
Protection class: IP44
Motor protection: Integrated active temperature management
Blades: High Performance Composite Material, uncoated, black
Rotor: Steel, powder-coated, ultramarine blue
Conformity: ErP 2015, CE
ErP-data
Efficiency η_{statA}: 31.7 %
Efficiency: N_{actual} = 42.2 / N_{target} = 40**
EC controller integrated
* Rated data
**ErP 2015

Characteristic curve

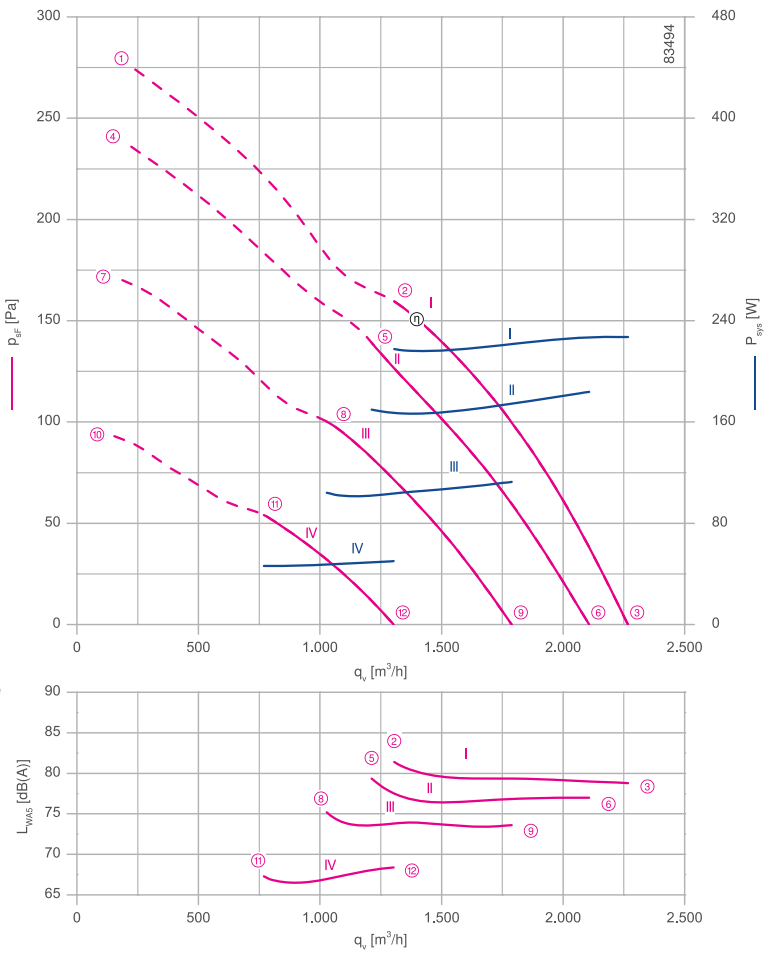

Measured in full bell mouth without guard grille in installation type A according to ISO 5801

Connection diagram Page 528
KT00036A

System components Page 430

Dimensions mm

Airflow direction A

Design D - axial bolted, suspension for full bell mouth, guard grille suction side

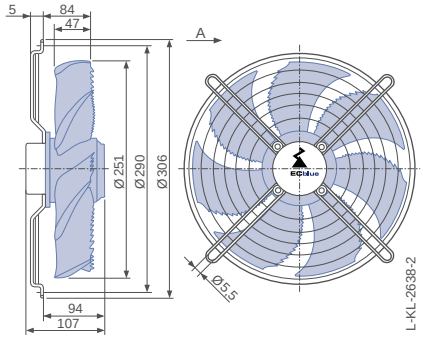

Design L - round full bell mouth, guard grille suction side

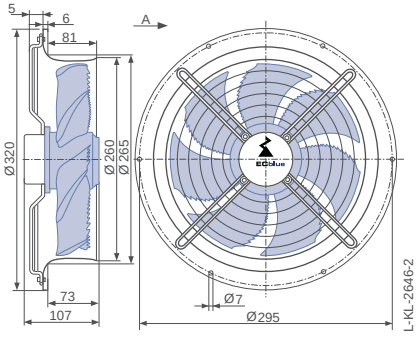

Airflow direction V

Design K - axial bolted, mounted for short bell mouth, guard grille pressure side

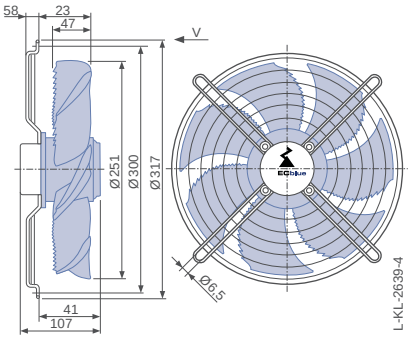

Performance data

Type	Characteristic curve	Torque %	Operating point	Current I A	Input power P_{sys} W	Suction side sound power level L_{WA5} dB(A)
FN025-6I_.0E._7	I	100	①	1.20	190	
		100	②	1.40	220	82
		100	③	1.45	230	79
	II	80	④	0.98	150	
		80	⑤	1.10	170	79
		80	⑥	1.20	180	77
	III	60	⑦	0.62	90	
		60	⑧	0.72	100	75
		60	⑨	0.76	110	74
	IV	40	⑩	0.31	42	
		40	⑪	0.35	46	67
		40	⑫	0.37	50	68

Current values determined at 230V

Fan ordering information

Airflow direction A			Airflow direction V		
Design	D (guard grille suction side)	L (guard grille suction side)	K (guard grille pressure side)	I (guard grille pressure side)	H (guard grille pressure side)
		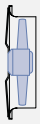			
Type	**FN025-6ID.0E.A7**	**FN025-6IL.0E.A7**	**FN025-6IK.0E.V7**	**FN025-6II.0E.V7**	**FN025-6IH.0E.V7**
Article no.	**140030**	**140034**	**140050**	**140042**	**140046**
Weight kg	3.00	4.00	3.40	3.00	4.00

Control technology

Control modules



Page 452

Design I - axial bolted, mounting for bell mouth flange, guard grille pressure side

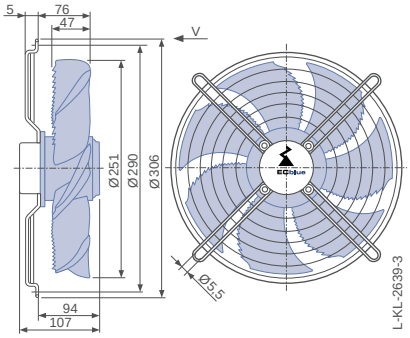

Design H - pipe sockets with a flange, guard grille pressure side

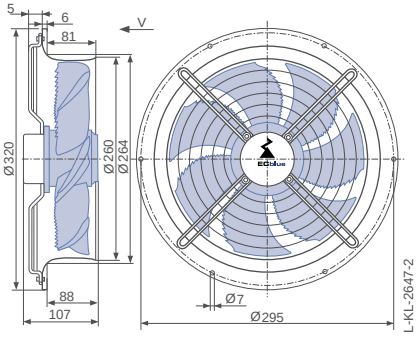

FE2owlet-EC blue

for single phase alternating current, 200-277 V

FN030



Description

Motor technology: EC
Rated voltage U_N: **1~ 200-277 V***
Rated frequency f_N: **50/60 Hz***
Input power P_{sys}: **150 W***
Rated current I_N: **1.15- 0.84 A***
Rated speed n_N: **1900 min^{-1}***
Thermal class: **THCL155***
Min. permitted ambient temperature $t_{R(min)}$: -25 °C
Max. permitted ambient temperature $t_{R(max)}$: 60 °C
Electrical connection: Integrated controller with attached cable
Number of blades: 7
Protection class: IP44
Motor protection: Integrated active temperature management
Blades: High Performance Composite Material, uncoated, black
Rotor: Steel, powder-coated, ultramarine blue
Conformity: ErP 2015, CE
ErP-data
Efficiency η_{statA}: 32.0 %
Efficiency: N_{actual} = 43.7 / N_{target} = 40**
EC controller integrated
* Rated data
**ErP 2015

Characteristic curve

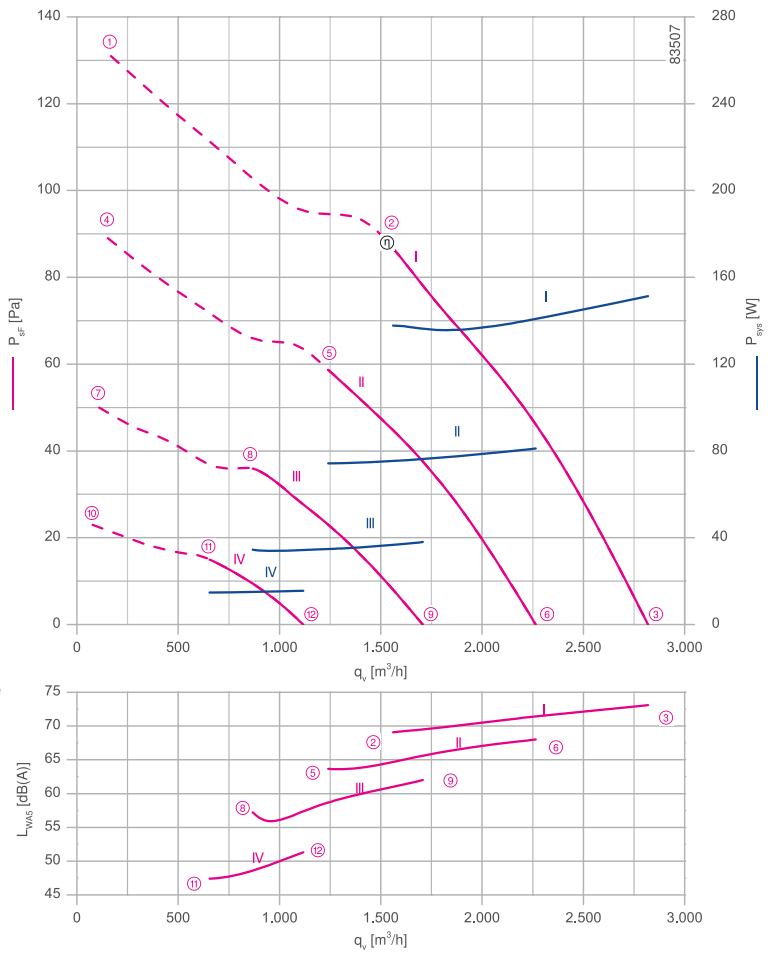

Measured in full bell mouth without guard grille in installation type A according to ISO 5801

Connection diagram Page 528
KT00036A

System components Page 430

Dimensions mm

Airflow direction A

Design D - axial bolted, suspension for full bell mouth, guard grille suction side

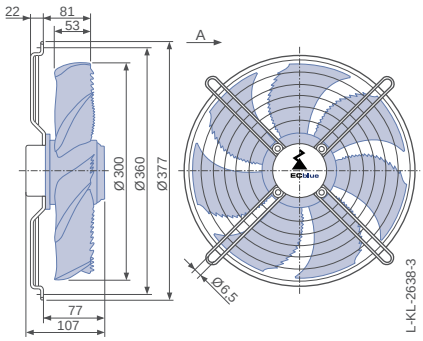

Design L - round full bell mouth, guard grille suction side

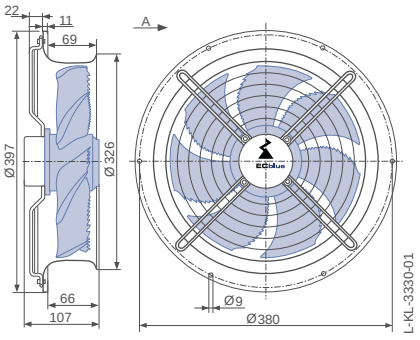

Airflow direction V

Design K - axial bolted, mounted for short bell mouth, guard grille pressure side

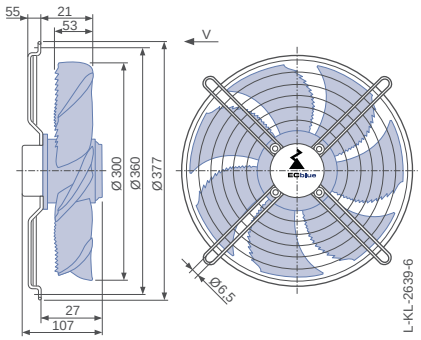

Performance data

Type	Characteristic curve	Torque %	Operating point	Current I A	Input power P_{sys} W	Suction side sound power level L_{WA5} dB(A)
FN030-6I_.0E._7	I	100	①	0.82	120	
		100	②	0.94	140	69
		100	③	1.00	150	73
	II	80	④	0.48	70	
		80	⑤	0.52	75	64
		80	⑥	0.58	80	68
	III	60	⑦	0.26	32	
		60	⑧	0.27	34	57
		60	⑨	0.29	38	62
	IV	40	⑩	0.14	14	
		40	⑪	0.15	15	47
		40	⑫	0.15	16	51

Current values determined at 230V

Fan ordering information

Airflow direction A			Airflow direction V		
Design	D (guard grille suction side)	L (guard grille suction side)	K (guard grille pressure side)	I (guard grille pressure side)	H (guard grille pressure side)
		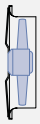			
Type	**FN030-6ID.0E.A7**	**FN030-6IL.0E.A7**	**FN030-6IK.0E.V7**	**FN030-6II.0E.V7**	**FN030-6IH.0E.V7**
Article no.	**140031**	**140035**	**140051**	**140043**	**140047**
Weight kg	3.70	5.30	3.90	3.70	5.30

Control technology

Control modules



Page 452

Design I - axial bolted, mounting for bell mouth flange, guard grille pressure side

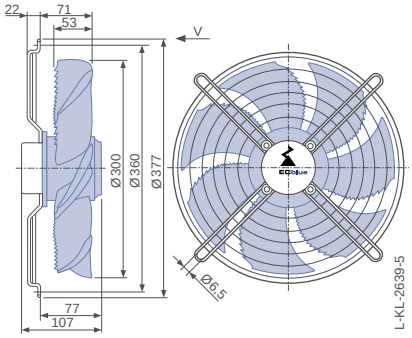

Design H - pipe sockets with a flange, guard grille pressure side

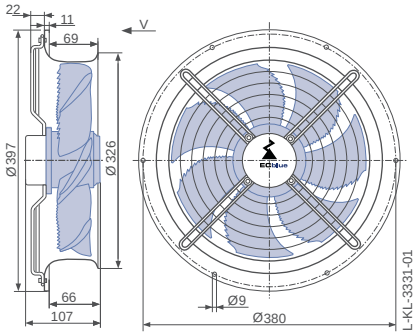

FE2owlet-ECblue

for single phase alternating current, 200-277 V

FN030



Description

Motor technology: EC
Rated voltage U_N: **1~ 200-277 V***
Rated frequency f_N: **50/60 Hz***
Input power P_{sys}: **420 W***
Rated current I_N: **2.20- 1.55 A***
Rated speed n_N: **2750 min^{-1}***
Thermal class: **THCL155***
Min. permitted ambient temperature $t_{R(min)}$: -35 °C
Max. permitted ambient temperature $t_{R(max)}$: 60 °C
Electrical connection: integrated Controller
Number of blades: 7
Protection class: IP54
Motor protection: Integrated active temperature management
Blades: High Performance Composite Material, uncoated, black
Rotor: Steel, 2 coat paint, ultramarine blue
Conformity: ErP 2015, CE
ErP-data
Efficiency η_{statA}: 43.5 %
Efficiency: N_{actual} = 52.3 / N_{target} = 40**
EC controller integrated
* Rated data
**ErP 2015

Characteristic curve

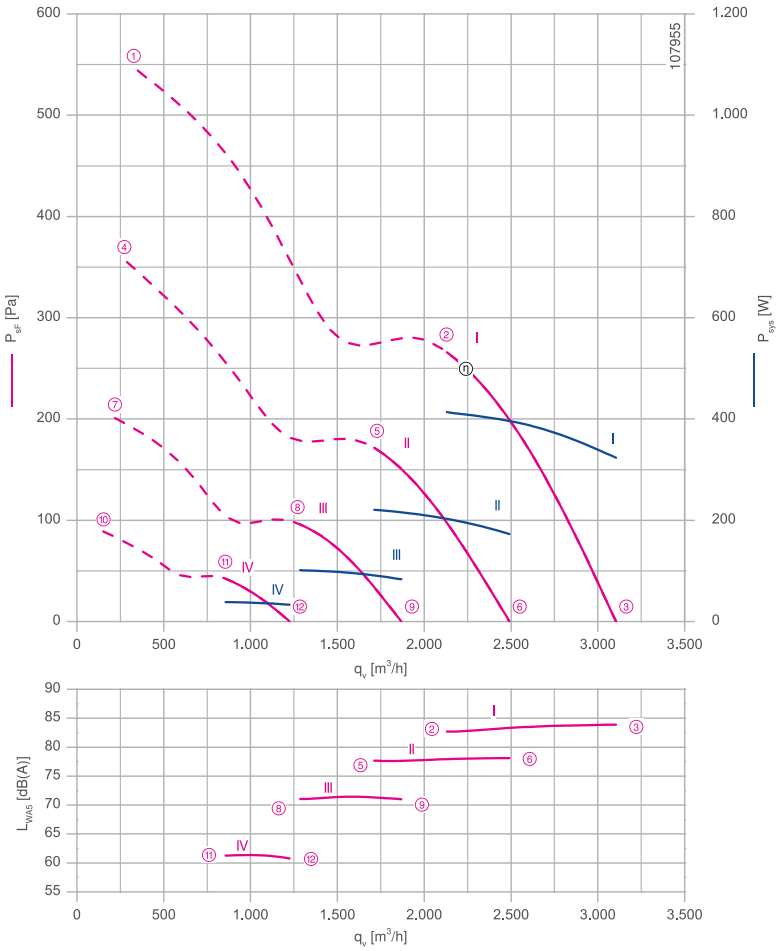

Measured in full bell mouth without guard grille in installation type A according to ISO 5801.

Connection diagram Page 529
1360-384

System components Page 430

Dimensions mm

Airflow direction A

Design W - axial bolted, mounting for short bell mouth, guard grille suction side

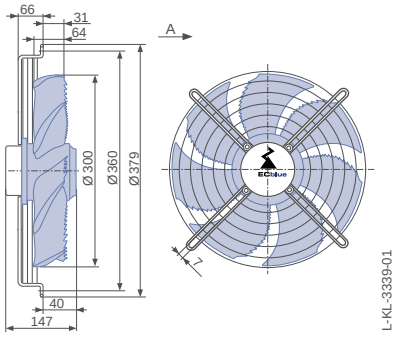

Design L - round full bell mouth, guard grille suction side

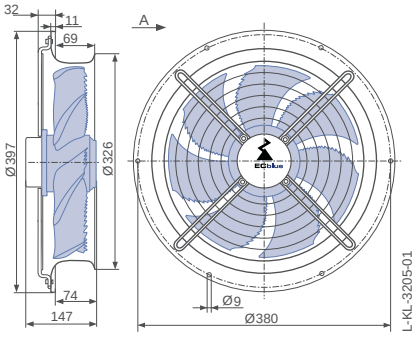

Airflow direction V

Design K - axial bolted, mounted for short bell mouth, guard grille pressure side

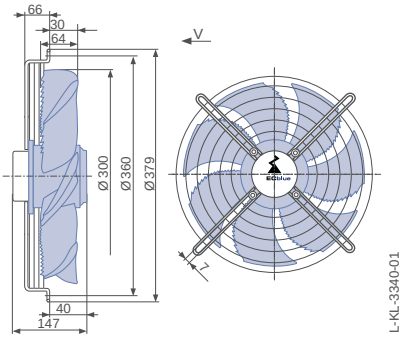

Performance data

Type	Characteristic curve	Speed n min⁻¹	Operating point	Current I A	Input power P_{sys} W	Suction side sound power level L_{WA5} dB(A)
FN030-6I_.BA._7P2	I	2750	①	2.20	520	
			②	1.80	420	83
			③	1.40	320	84
	II	2200	④	1.20	280	
			⑤	0.96	220	78
			⑥	0.76	170	78
	III	1650	⑦	0.56	130	
			⑧	0.46	100	71
			⑨	0.39	85	71
	IV	1100	⑩	0.24	46	
			⑪	0.22	38	61
			⑫	0.20	34	61

Current values determined at 230V

Fan ordering information

Airflow direction A			Airflow direction V	
Design	W (guard grille suction side)	L (guard grille suction side)	K (guard grille pressure side)	H (guard grille pressure side)
		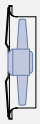		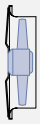
Type	**FN030-6IW.BA.A7P2**	**FN030-6IL.BA.A7P2**	**FN030-6IK.BA.V7P2**	**FN030-6IH.BA.V7P2**
Article no.	**165253**	**165254**	**165257**	**165258**
Weight kg	6.70	8.00	6.70	8.00

Control technology

Control modules



Page 452

Design H - pipe sockets with a flange, guard grille pressure side

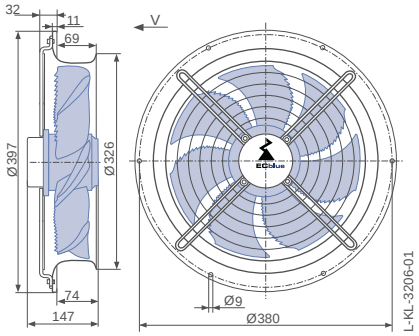

FE2owlet-EC blue

for single phase alternating current, 200-277 V

FN035



Description

Motor technology: EC
Rated voltage U_N: **1~ 200-277 V***
Rated frequency f_N: **50/60 Hz***
Input power P_{sys}: **120 W***
Rated current I_N: **0.90- 0.65 A***
Rated speed n_N: **1290 min^{-1}***
Thermal class: **THCL155***
Min. permitted ambient temperature $t_{R(min)}$: -25 °C
Max. permitted ambient temperature $t_{R(max)}$: 60 °C
Electrical connection: Integrated controller with attached cable
Number of blades: 7
Protection class: IP44
Motor protection: Integrated active temperature management
Blades: High Performance Composite Material, uncoated, black
Rotor: Steel, powder-coated, ultramarine blue
Conformity: CE
ErP-data
Not subject to the regulations of ErP directive (P_1< 125 W)
* Rated data

Characteristic curve

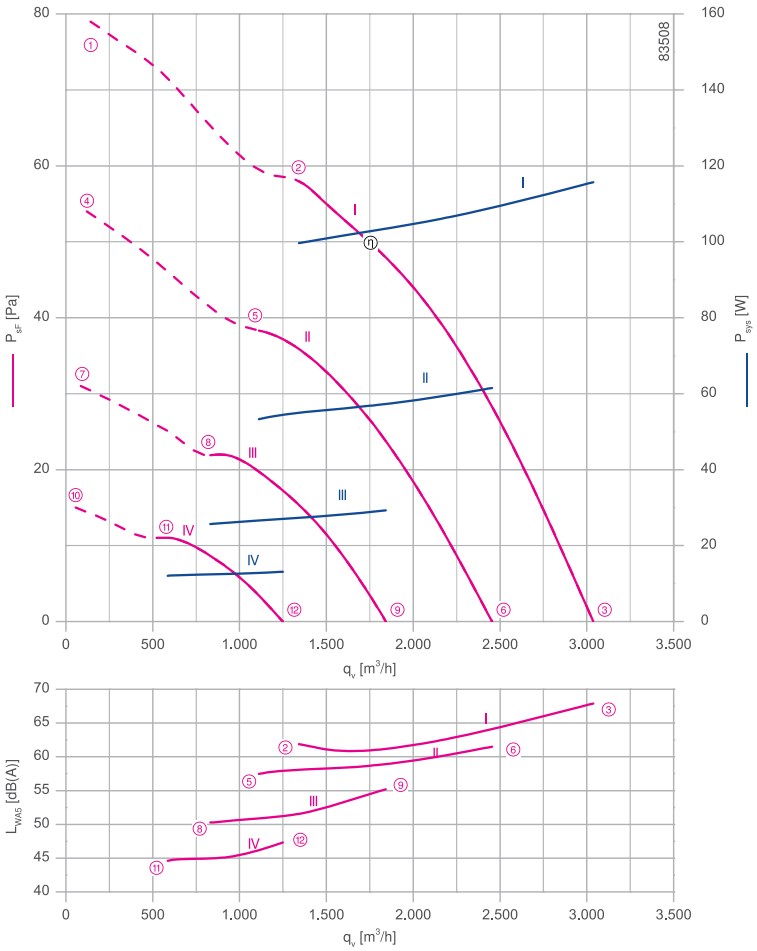

Measured in full bell mouth without guard grille in installation type A according to ISO 5801

Connection diagram Page 528
KT00036A

System components Page 430

Dimensions mm

Airflow direction A

Design D - axial bolted, suspension for full bell mouth, guard grille suction side

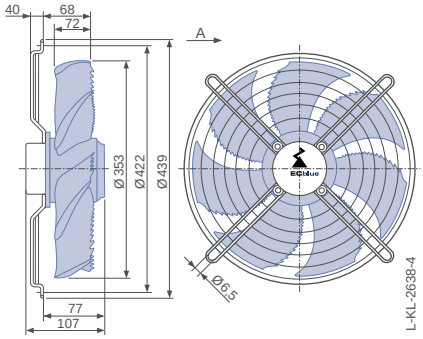

Design L - round full bell mouth, guard grille suction side

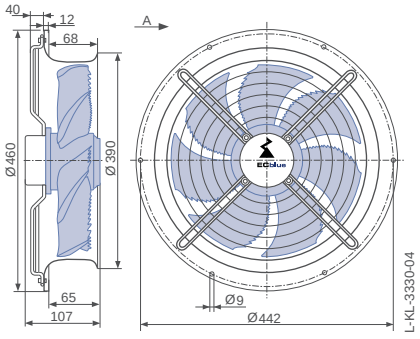

Airflow direction V

Design K - axial bolted, mounted for short bell mouth, guard grille pressure side

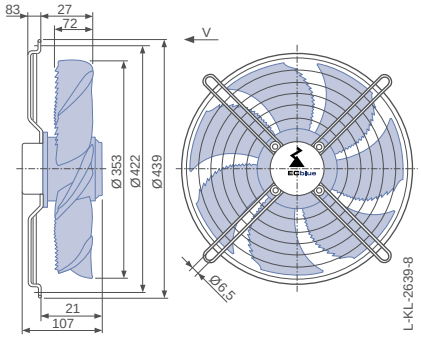

Performance data

Type	Characteristic curve	Torque %	Operating point	Current I A	Input power P_{sys} W	Suction side sound power level L_{WA5} dB(A)
FN035-6I_.0E._7	I	100	①	0.66	95	
		100	②	0.70	100	62
		100	③	0.78	120	68
	II	80	④	0.37	50	
		80	⑤	0.39	55	58
		80	⑥	0.44	60	62
	III	60	⑦	0.20	24	
		60	⑧	0.21	26	50
		60	⑨	0.24	30	55
	IV	40	⑩	0.12	12	
		40	⑪	0.13	12	45
		40	⑫	0.13	13	47

Current values determined at 230V

Fan ordering information

Airflow direction A			Airflow direction V		
Design	D (guard grille suction side)	L (guard grille suction side)	K (guard grille pressure side)	I (guard grille pressure side)	H (guard grille pressure side)
		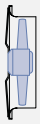			
Type	**FN035-6ID.0E.A7**	**FN035-6IL.0E.A7**	**FN035-6IK.0E.V7**	**FN035-6II.0E.V7**	**FN035-6IH.0E.V7**
Article no.	**140032**	**140036**	**140052**	**140044**	**140048**
Weight kg	4.40	6.40	4.80	4.40	6.40

Control technology

Control modules



Page 452

Design I - axial bolted, mounting for bell mouth flange, guard grille pressure side

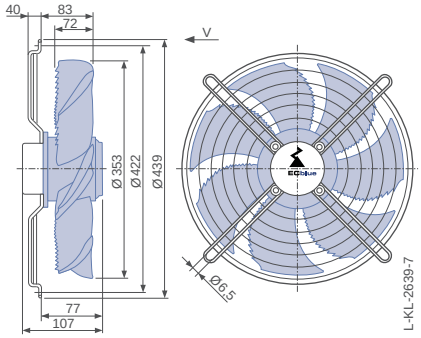

Design H - pipe sockets with a flange, guard grille pressure side

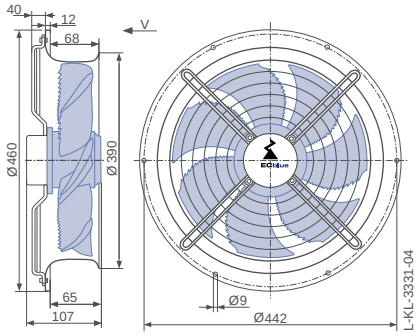

FE2owlet-EC blue

for single phase alternating current, 200-277 V

FN035



Description

Motor technology: EC
Rated voltage U_N: **1~ 200-277 V***
Rated frequency f_N: **50/60 Hz***
Input power P_{sys}: **460 W***
Rated current I_N: **2.40- 1.70 A***
Rated speed n_N: **2000 min^{-1}***
Thermal class: **THCL155***
Min. permitted ambient temperature $t_{R(min)}$: -35 °C
Max. permitted ambient temperature $t_{R(max)}$: 55 °C
Electrical connection: integrated Controller
Number of blades: 7
Protection class: IP54
Motor protection: Integrated active temperature management
Blades: High Performance Composite Material, uncoated, black
Rotor: Steel, 2 coat paint, ultramarine blue
Conformity: ErP 2015, CE
ErP-data
Efficiency η_{statA}: 38.8 %
Efficiency: N_{actual} = 47.2 / N_{target} = 40**
EC controller integrated
* Rated data
**ErP 2015

Characteristic curve

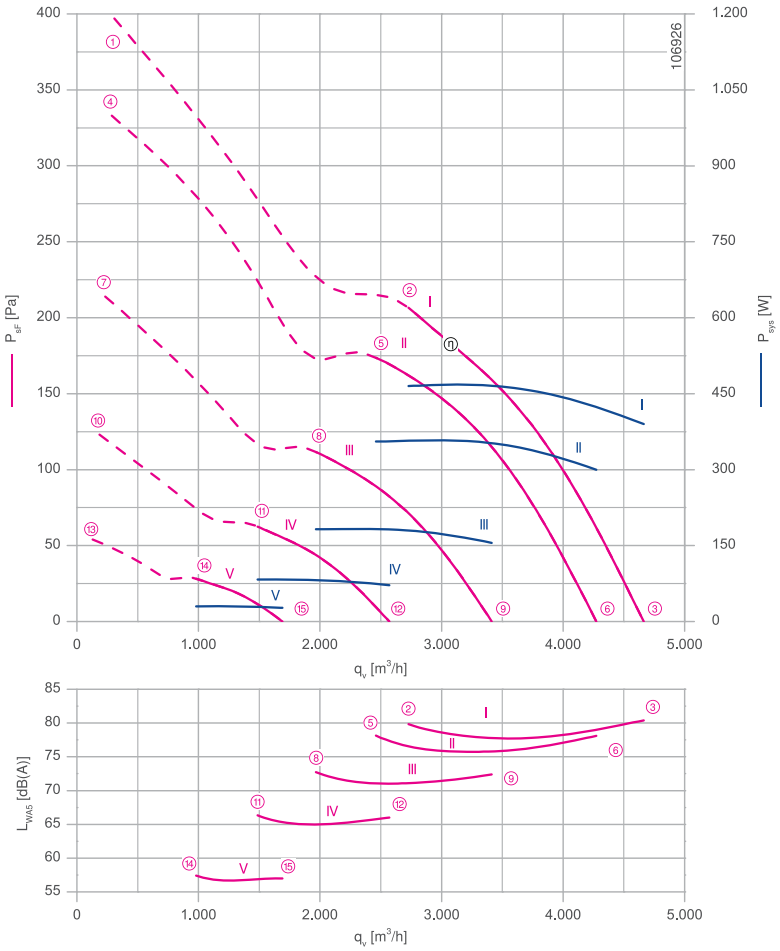

Measured in full bell mouth without guard grille in installation type A according to ISO 5801.

Connection diagram Page 529
1360-384

System components Page 430

Dimensions mm

Airflow direction A

Design W - axial bolted, mounting for short bell mouth, guard grille suction side

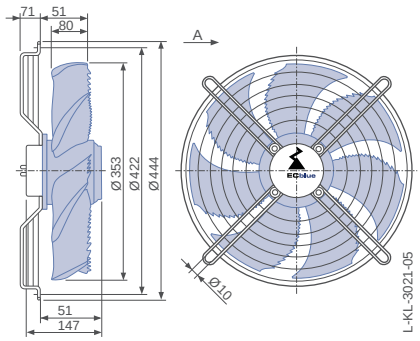

Design L - round full bell mouth, guard grille suction side

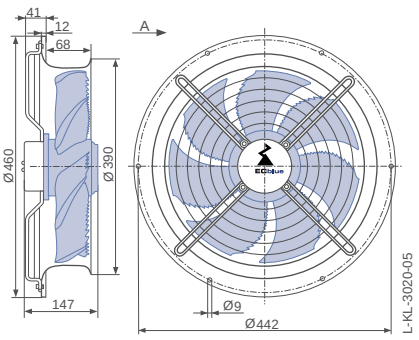

Design Q - square full bell mouth, guard grille suction side

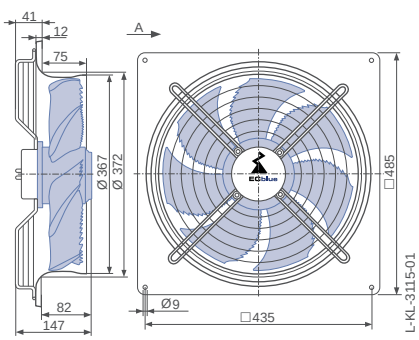

Performance data

Type	Characteristic curve	Speed n min⁻¹	Operating point	Current I A	Input power P_{sys} W	Suction side sound power level L_{WA5} dB(A)	Maximum ambient temperature t_R °C
FN035-6I_.BA._7P2	I	2000	①	2.90	660		55
			②	2.00	460	80	
			③	1.70	390	80	
	II	1830	④	2.20	500		60
			⑤	1.55	360	78	
			⑥	1.30	300	78	
	III	1460	⑦	1.10	250		
			⑧	0.80	180	73	
			⑨	0.68	160	72	
	IV	1100	⑩	0.50	110		70
			⑪	0.38	85	66	
			⑫	0.34	70	66	
	V	730	⑬	0.22	40		
			⑭	0.18	30	57	
			⑮	0.17	26	57	

Current values determined at 230V

Fan ordering information

Airflow direction A

Airflow direction V

Design	W (guard grille suction side)	L (guard grille suction side)	Q (guard grille suction side)	K (guard grille pressure side)	Q (guard grille pressure side)
		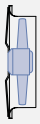	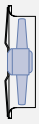		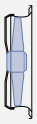
Type Article no.	**FN035-6IW.BA.A7P2 165261**	**FN035-6IL.BA.A7P2 165262**	**FN035-6IQ.BA.A7P2 165263**	**FN035-6IK.BA.V7P2 165265**	**FN035-6IQ.BA.V7P2 165267**
Weight kg	7.20	8.70	9.50	7.20	9.50

Control technology

Control modules



Page 452

Airflow direction V

Design K - axial bolted, mounted for short bell mouth, guard grille pressure side

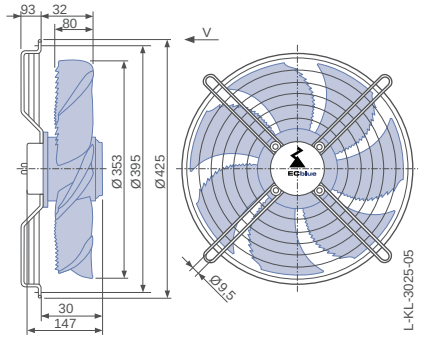

Design Q - square full bell mouth, guard grille pressure side

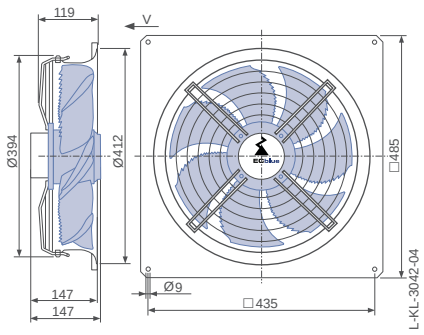

FE2owlet-EC blue

for single phase alternating current, 200-277 V

FN040



Beschreibung

Motortechnologie: EC
Bemessungsspannung U: **1~ 200-277 V***
Bemessungsfrequenz f: **50/60 Hz***
Aufnahmeleistung P_{sys}: **420 W***
Bemessungsstrom I: **2,20- 1,55 A***
Bemessungsdrehzahl n_{max}: **1800 min^{-1}***
Thermische Klasse: **THCL155***
Min. zulässige Fördermitteltemperatur $t_{R(min)}$: -35 °C
Max. zulässige Fördermitteltemperatur $t_{R(max)}$: 60 °C
Elektrischer Anschluss: Integrierter Controller
Flügelanzahl: 7
Schutzart: IP54
Motorschutz: Integriertes aktives Temperaturmanagement
Flügel: Hochleistungs-Verbundwerkstoff, unlackiert, schwarz
Rotor: Stahl, 2-Schicht-Lackierung, ultramarinblau
Konformität: ErP 2015, CE
ErP-Daten
Wirkungsgrad η_{statA}: 49,5 %
Effizienzgrad: N_{ist} = 58,5 / N_{soll} = 40**
EC-Controller integriert
* Leistungsschilddaten
**ErP 2015

Characteristic curve

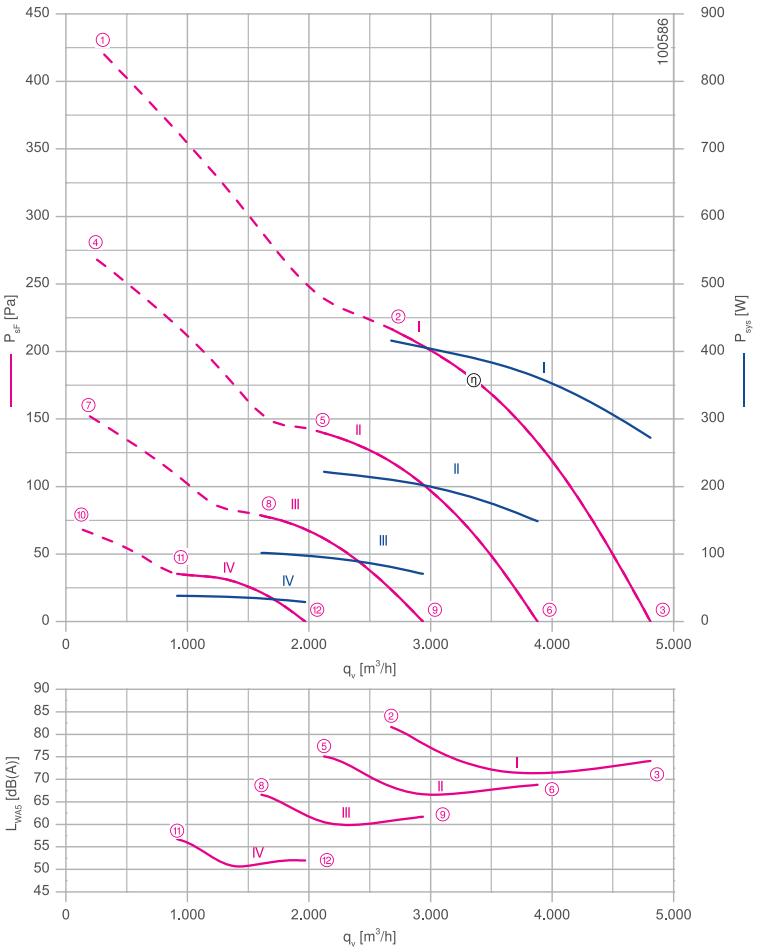

Measured in full bell mouth without guard grille in installation type A according to ISO 5801.

Connection diagram Page 529
1360-384

System components Page 430

Dimensions mm

Airflow direction A

Design W - axial bolted, mounting for short bell mouth, guard grille suction side

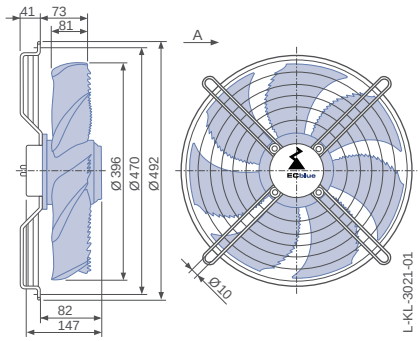

Design L - round full bell mouth, guard grille suction side

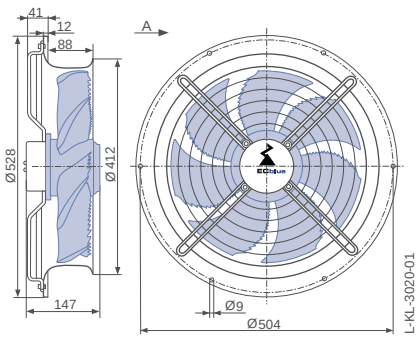

Airflow direction V

Design K - axial bolted, mounted for short bell mouth, guard grille pressure side

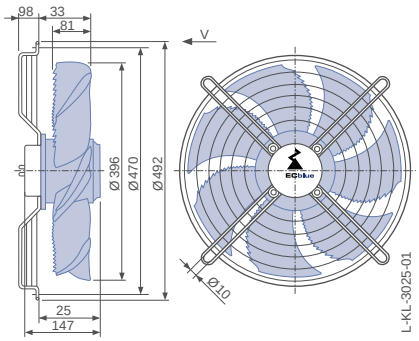

Performance data

Type	Characteristic curve	Speed n min⁻¹	Operating point	Current I A	Input power P_{sys} W	Suction side sound power level L_{WA5} dB(A)
FN040-6I_.BD._7P1	I	1800	①	2.50	580	
			②	1.85	420	83
			③	1.20	270	74
	II	1440	④	1.35	300	
			⑤	0.98	220	75
			⑥	0.66	150	69
	III	1080	⑦	0.62	140	
			⑧	0.48	100	67
			⑨	0.35	70	62
	IV	720	⑩	0.28	48	
			⑪	0.24	38	56
			⑫	0.19	28	52

Current values determined at 230V

Fan ordering information

Airflow direction A | **Airflow direction V**

Design	W (guard grille suction side)	L (guard grille suction side)	K (guard grille pressure side)	Q (guard grille pressure side)
		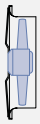		
Type	**FN040-6IW.BD.A7P1**	**FN040-6IL.BD.A7P1**	**FN040-6IK.BD.V7P1**	**FN040-6IQ.BD.V7P1**
Article no.	**162115**	**162114**	**162133**	**162272**
Weight kg	7.00	9.50	7.50	10.40

Control technology

Control modules



Page 452

Design Q - square full bell mouth, guard grille pressure side

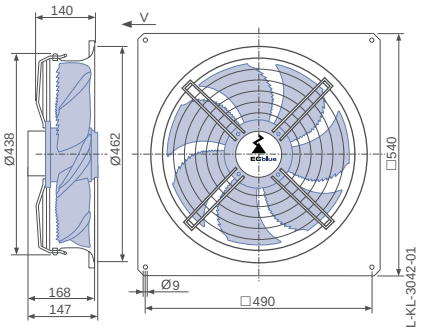

FE2owlet-EC blue

for single phase alternating current, 200-277 V

FN042



Description

Motor technology: EC
Rated voltage U_N: **1~ 200-277 V***
Rated frequency f_N: **50/60 Hz***
Input power P_{sys}: **390 W***
Rated current I_N: **1.95- 1.45 A***
Rated speed n_N: **1600 min^{-1}***
Thermal class: **THCL155***
Min. permitted ambient temperature $t_{R(min)}$: -35 °C
Max. permitted ambient temperature $t_{R(max)}$: 60 °C
Electrical connection: integrated Controller
Number of blades: 7
Protection class: IP54
Motor protection: Integrated active temperature management
Blades: High Performance Composite Material, uncoated, black
Rotor: Steel, 2 coat paint, ultramarine blue
Conformity: ErP 2015, CE
ErP-data
Efficiency η_{statA}: 46.2 %
Efficiency: N_{actual} = 55.3 / N_{target} = 40**
EC controller integrated
* Rated data
**ErP 2015

Characteristic curve

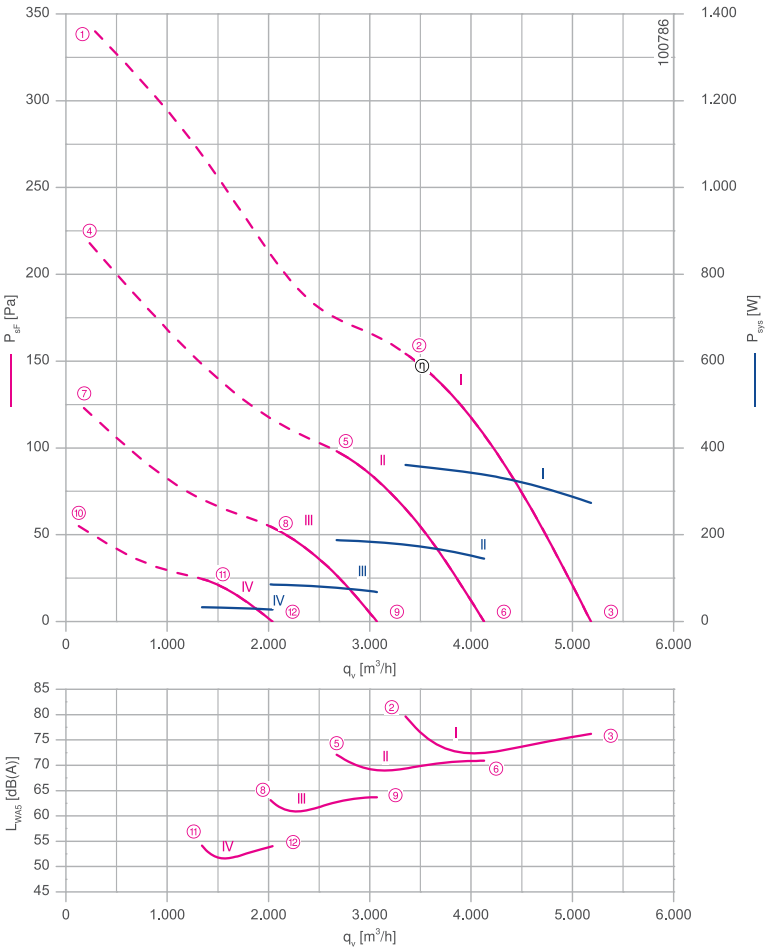

Measured in full bell mouth without guard grille in installation type A according to ISO 5801.

Connection diagram Page 529
1360-384

System components Page 430

Dimensions mm

Airflow direction A

Design W - axial bolted, mounting for short bell mouth, guard grille suction side

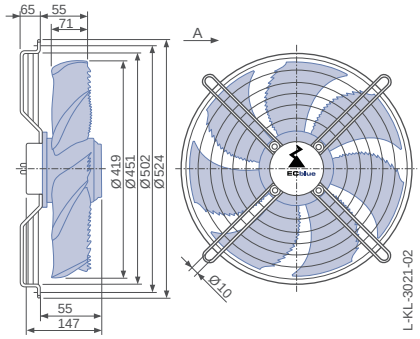

Design L - round full bell mouth, guard grille suction side

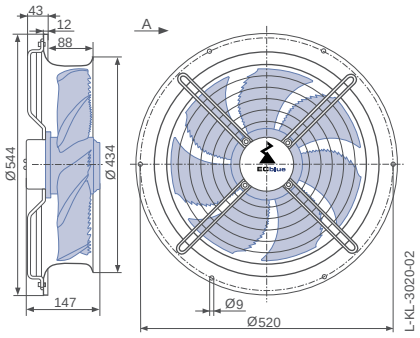

Airflow direction V

Design K - axial bolted, mounted for short bell mouth, guard grille pressure side

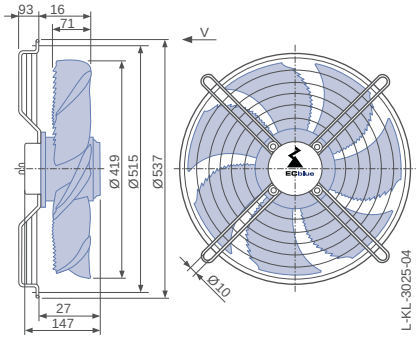

Performance data

Type	Characteristic curve	Speed n min⁻¹	Operating point	Current I A	Input power P_{sys} W	Suction side sound power level L_{WA5} dB(A)
FN042-6I_.BD._7P1	I	1600	①	2.30	540	
			②	1.60	360	80
			③	1.20	270	76
	II	1280	④	1.20	270	
			⑤	0.84	190	72
			⑥	0.66	150	71
	III	960	⑦	0.56	120	
			⑧	0.40	85	63
			⑨	0.33	70	64
	IV	640	⑩	0.24	44	
			⑪	0.20	32	51
			⑫	0.18	28	54

Current values determined at 230V

Fan ordering information

Airflow direction A			Airflow direction V	
Design	W (guard grille suction side)	L (guard grille suction side)	K (guard grille pressure side)	H (guard grille pressure side)
		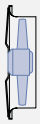		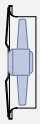
Type	**FN042-6IW.BD.A7P1**	**FN042-6IL.BD.A7P1**	**FN042-6IK.BD.V7P1**	**FN042-6IH.BD.V7P1**
Article no.	**162118**	**162117**	**162136**	**162135**
Weight kg	7.30	9.70	7.80	9.60

Control technology

Control modules



Page 452

Design H - pipe sockets with a flange, guard grille pressure side

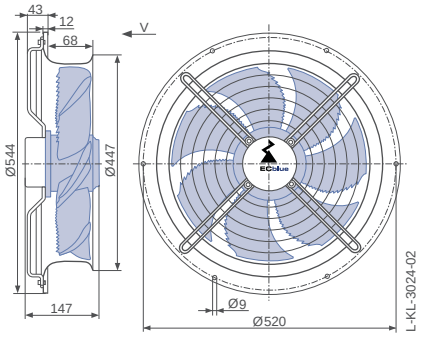

FE2owlet-EC blue

for single phase alternating current, 200-277 V

FN045



Description

Motor technology: EC
Rated voltage U_N: **1~ 200-277 V***
Rated frequency f_N: **50/60 Hz***
Input power P_{sys}: **390 W***
Rated current I_N: **1.95- 1.40 A***
Rated speed n_N: **1470 min^{-1}***
Thermal class: **THCL155***
Min. permitted ambient temperature $t_{R(min)}$: -35 °C
Max. permitted ambient temperature $t_{R(max)}$: 60 °C
Electrical connection: integrated Controller
Number of blades: 7
Protection class: IP54
Motor protection: Integrated active temperature management
Blades: High Performance Composite Material, uncoated, black
Rotor: Steel, 2 coat paint, ultramarine blue
Conformity: ErP 2015, CE
ErP-data
Efficiency η_{statA}: 45.1 %
Efficiency: N_{actual} = 54.1 / N_{target} = 40**
EC controller integrated
* Rated data
**ErP 2015

Characteristic curve

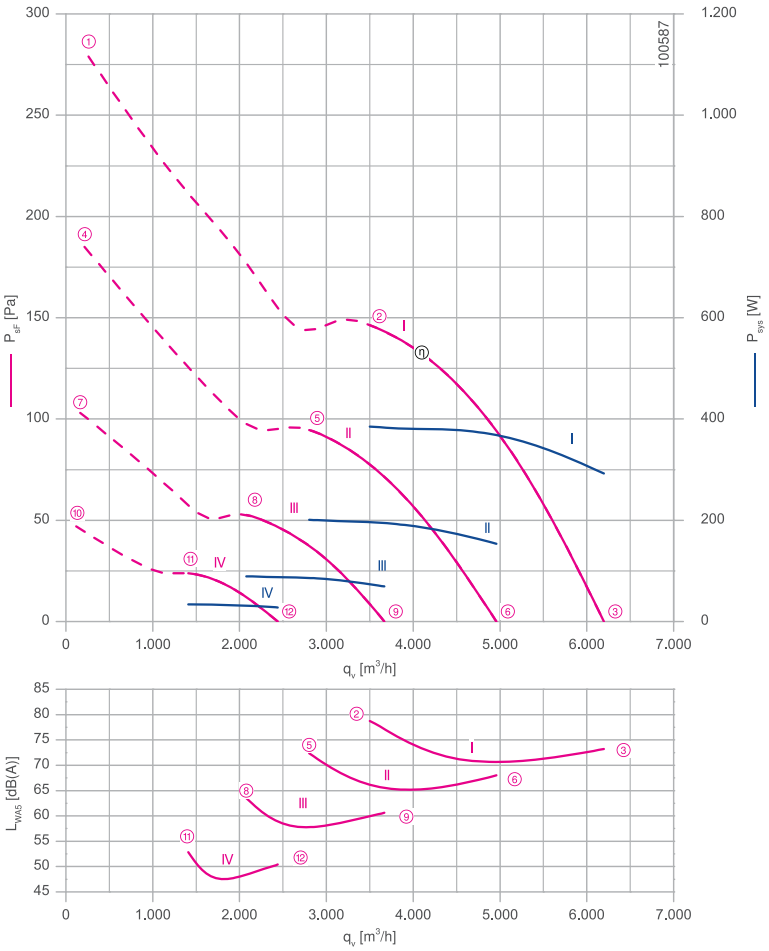

Measured in full bell mouth without guard grille in installation type A according to ISO 5801.

Connection diagram Page 529
1360-384

System components Page 430

Dimensions mm

Airflow direction A

Design W - axial bolted, mounting for short bell mouth, guard grille suction side

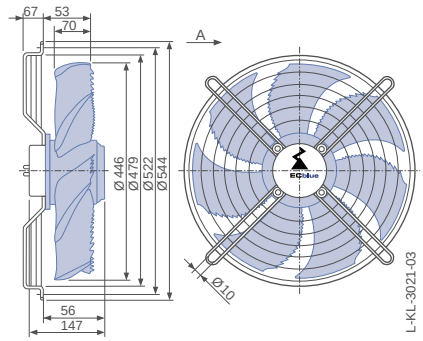

Design L - round full bell mouth, guard grille suction side

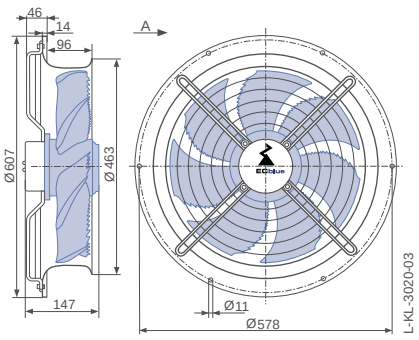

Airflow direction V

Design K - axial bolted, mounted for short bell mouth, guard grille pressure side

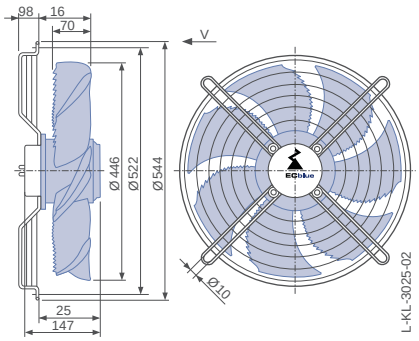

Performance data

Type	Characteristic curve	Speed n min⁻¹	Operating point	Current I A	Input power P_{sys} W	Suction side sound power level L_{WA5} dB(A)
FN045-6I_.BD._7P2	I	1470	①	2.30	540	
			②	1.70	380	79
			③	1.25	290	73
	II	1180	④	1.25	280	
			⑤	0.88	200	72
			⑥	0.68	150	68
	III	880	⑦	0.54	120	
			⑧	0.40	90	63
			⑨	0.33	70	61
	IV	590	⑩	0.23	44	
			⑪	0.20	34	52
			⑫	0.18	28	50

Current values determined at 230V

Fan ordering information

Airflow direction A | **Airflow direction V**

Design	W (guard grille suction side)	L (guard grille suction side)	K (guard grille pressure side)	Q (guard grille pressure side)
		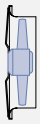		
Type	**FN045-6IW.BD.A7P2**	**FN045-6IL.BD.A7P2**	**FN045-6IK.BD.V7P2**	**FN045-6IQ.BD.V7P2**
Article no.	**162121**	**162120**	**162139**	**162273**
Weight kg	7.40	10.60	7.80	11.10

Control technology

Control modules



Page 452

Design Q - square full bell mouth, guard grille pressure side

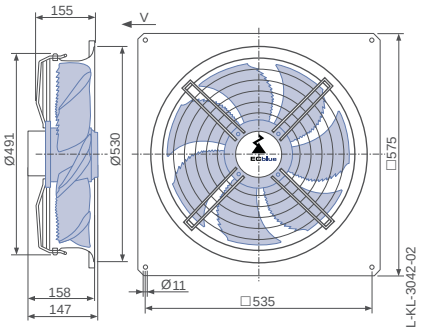

FE2owlet-EC blue

for single phase alternating current, 200-277 V

FN045



Description

Motor technology: EC
Rated voltage U_N: **1~ 200-277 V***
Rated frequency f_N: **50/60 Hz***
Input power P_{sys}: **220 W***
Rated current I_N: **1.10- 0.80 A***
Rated speed n_N: **1100 min^{-1}***
Thermal class: **THCL155***
Min. permitted ambient temperature $t_{R(min)}$: -35 °C
Max. permitted ambient temperature $t_{R(max)}$: 65 °C
Electrical connection: integrated Controller
Number of blades: 7
Protection class: IP54
Motor protection: Integrated active temperature management
Blades: High Performance Composite Material, uncoated, black
Rotor: Steel, 2 coat paint, ultramarine blue
Conformity: ErP 2015, CE
ErP-data
Efficiency η_{statA}: 43.3 %
Efficiency: N_{actual} = 53.8 / N_{target} = 40**
EC controller integrated
* Rated data
**ErP 2015

Characteristic curve

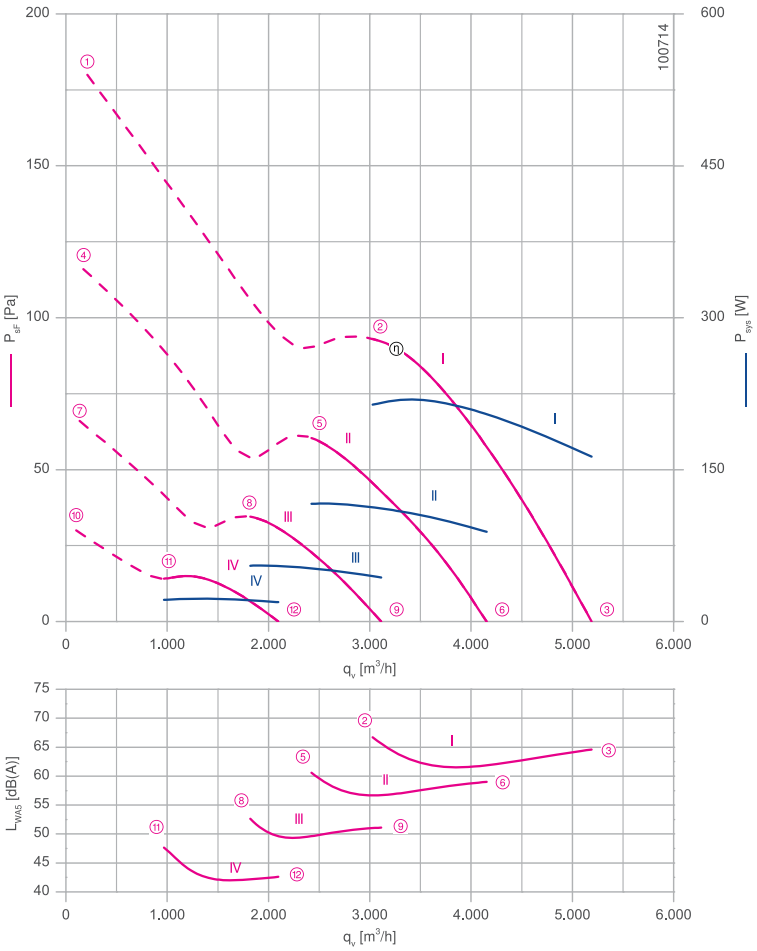

Measured in full bell mouth without guard grille in installation type A according to ISO 5801.

Connection diagram Page 529
1360-384

System components Page 430

Dimensions mm

Airflow direction A

Design W - axial bolted, mounting for short bell mouth, guard grille suction side

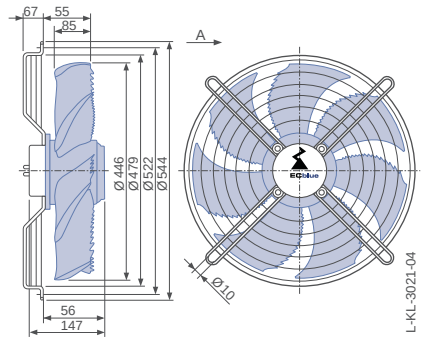

Design L - round full bell mouth, guard grille suction side

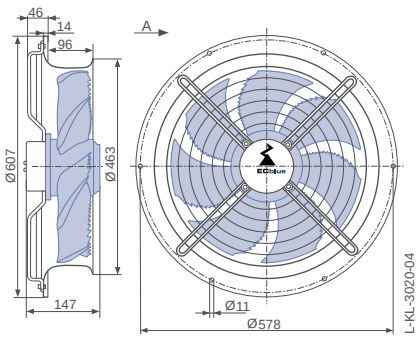

Airflow direction V

Design K - axial bolted, mounted for short bell mouth, guard grille pressure side

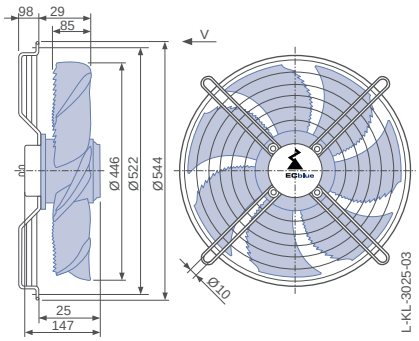

Performance data

Type	Characteristic curve	Speed n min⁻¹	Operating point	Current I A	Input power P_{sys} W	Suction side sound power level L_{WA5} dB(A)
FN045-6I_.BD._7P3	I	1100	①	1.25	290	
			②	0.94	210	67
			③	0.72	160	65
	II	880	④	0.68	150	
			⑤	0.52	120	60
			⑥	0.40	90	59
	III	660	⑦	0.34	70	
			⑧	0.27	55	52
			⑨	0.23	44	51
	IV	440	⑩	0.18	28	
			⑪	0.16	22	43
			⑫	0.15	19	43

Current values determined at 230V

Fan ordering information

Airflow direction A | **Airflow direction V**

Design	W (guard grille suction side)	L (guard grille suction side)	K (guard grille pressure side)	Q (guard grille pressure side)
		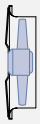		
Type	**FN045-6IW.BD.A7P3**	**FN045-6IL.BD.A7P3**	**FN045-6IK.BD.V7P3**	**FN045-6IQ.BD.V7P3**
Article no.	**162124**	**162123**	**162142**	**162274**
Weight kg	7.50	10.60	7.90	11.20

Control technology

Control modules



Page 452

Design Q - square full bell mouth, guard grille pressure side

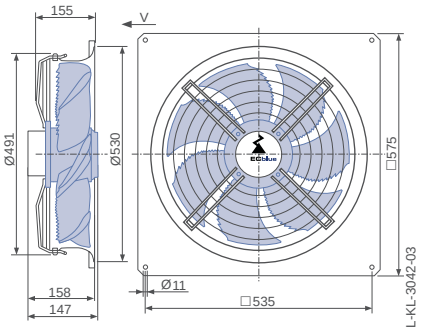

FE2owlet-EC blue

for single phase alternating current, 200-277 V

FN045



Description

Motor technology: EC
Rated voltage U_N: **1~ 200-277 V***
Rated frequency f_N: **50/60 Hz***
Input power P_{sys}: **0.76 kW***
Rated current I_N: **3.90- 3.30 A***
Rated speed n_N: **1650 min^{-1}***
Thermal class: **THCL155***
Min. permitted ambient temperature $t_{R(min)}$: -35 °C
Max. permitted ambient temperature $t_{R(max)}$: 60 °C
Electrical connection: integrated Controller
Number of blades: 5
Protection class: IP54
Motor protection: Integrated active temperature management
Blades: High Performance Composite Material, uncoated, black
Rotor: Steel, 2 coat paint, ultramarine blue
Conformity: ErP 2015, CE, UL
ErP-data
Efficiency η_{statA}: 41.2 %
Efficiency: N_{actual} = 48.3 / N_{target} = 40**
EC controller integrated
* Rated data
**ErP 2015

Characteristic curve

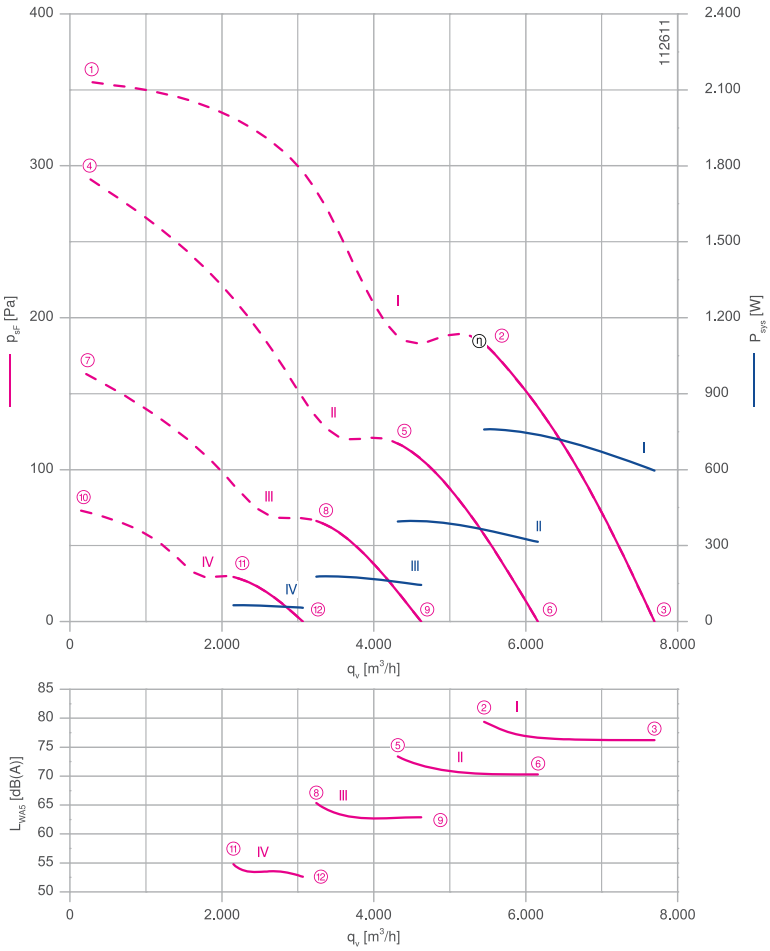

Measured in full bell mouth without guard grille in installation type A according to ISO 5801

Connection diagram Page 530
1360-403

System components Page 430

Dimensions mm

Airflow direction A

Design W - axial bolted, mounting for short bell mouth, guard grille suction side

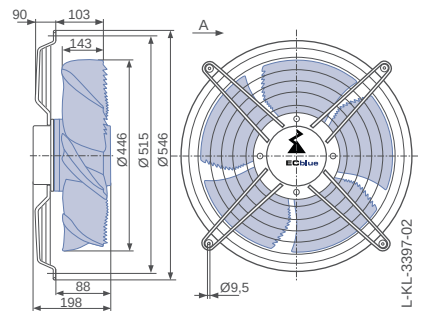

Design Q - square full bell mouth, guard grille suction side

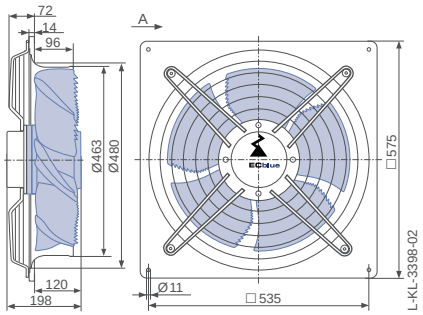

Airflow direction V

Design K - axial bolted, mounted for short bell mouth, guard grille pressure side

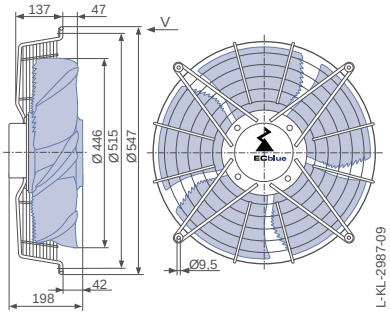

Performance data

Type	Characteristic curve	Speed n min⁻¹	Operating point	Current I A	Input power P_{sys} W	Suction side sound power level L_{WA5} dB(A)
FN045-ZI_.DC._5P4	I	1650	①	3.50	780	
			②	3.40	760	80
			③	2.70	600	76
	II	1320	④	2.60	580	
			⑤	1.85	390	73
			⑥	1.50	310	70
	III	990	⑦	1.20	250	
			⑧	0.84	180	65
			⑨	0.68	140	63
	IV	660	⑩	0.44	85	
			⑪	0.37	65	55
			⑫	0.33	55	53

Current values determined at 230V

Fan ordering information

Airflow direction A			Airflow direction V	
Design	W (guard grille suction side)	Q (guard grille suction side)	K (guard grille pressure side)	Q (guard grille pressure side)
		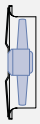		
Type	**FN045-ZIW.DC.A5P4**	**FN045-ZIQ.DC.A5P4**	**FN045-ZIK.DC.V5P4**	**FN045-ZIQ.DC.V5P4**
Article no.	**168971**	**168972**	**168974**	**168975**
Weight kg	12.20	15.60	12.50	15.20

Control technology

Control modules	Add-on modules	Operating terminal
		
Page 452	Page 463	Page 472

Design Q - square full bell mouth, guard grille pressure side

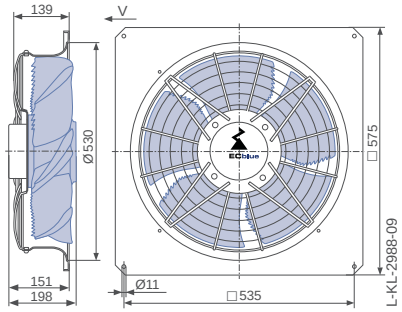

FE2owlet-EC blue

for three phase alternating current, 380-480 V

FN045



Description

Motor technology: EC
Rated voltage U_N: **3~ 380-480 V***
Rated frequency f_N: **50/60 Hz***
Input power P_{sys}: **0.74 kW***
Rated current I_N: **1.35- 1.10 A***
Rated speed n_N: **1650 min^{-1}***
Thermal class: **THCL155***
Min. permitted ambient temperature $t_{R(min)}$: -35 °C
Max. permitted ambient temperature $t_{R(max)}$: 60 °C
Electrical connection: integrated Controller
Number of blades: 5
Protection class: IP54
Motor protection: Integrated active temperature management
Blades: High Performance Composite Material, uncoated, black
Rotor: Steel, 2 coat paint, ultramarine blue
Conformity: ErP 2015, CE, UL
ErP-data
Efficiency η_{statA}: 41.4 %
Efficiency: N_{actual} = 48.5 / N_{target} = 40**
EC controller integrated
* Rated data
**ErP 2015

Characteristic curve

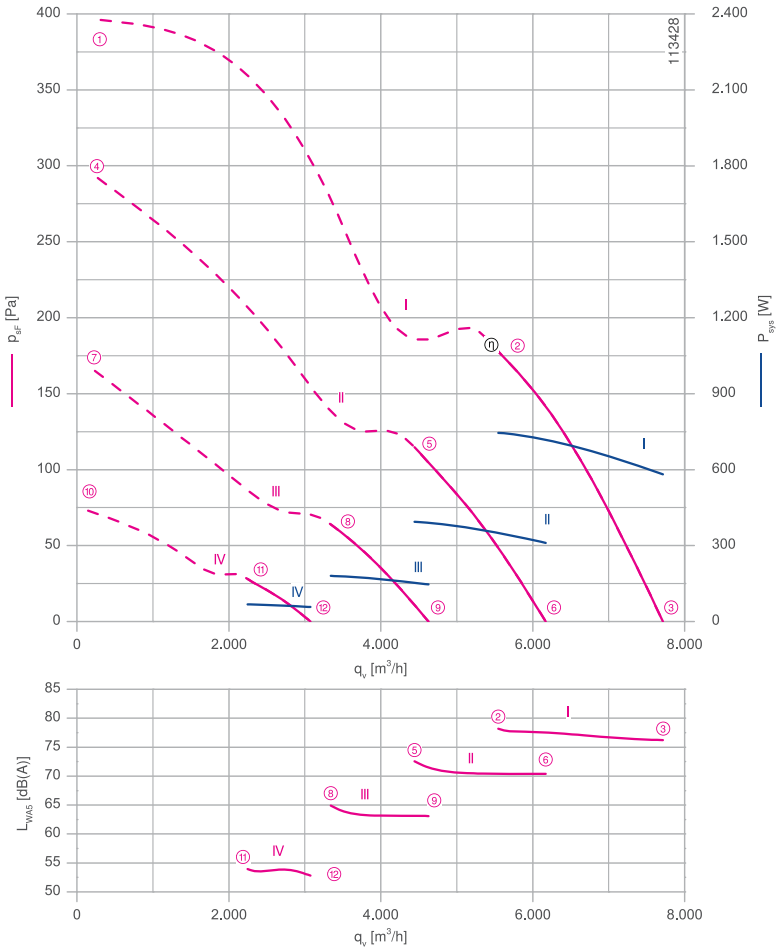

Measured in full bell mouth without guard grille in installation type A according to ISO 5801

Connection diagram Page 530
1360-403

System components Page 430

Dimensions mm

Airflow direction A

Design W - axial bolted, mounting for short bell mouth, guard grille suction side

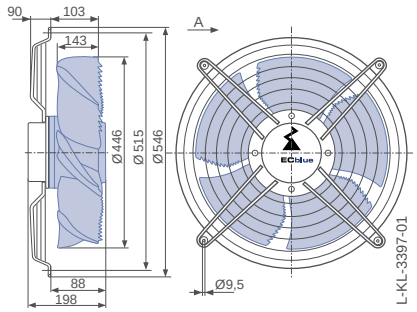

Design Q - square full bell mouth, guard grille suction side

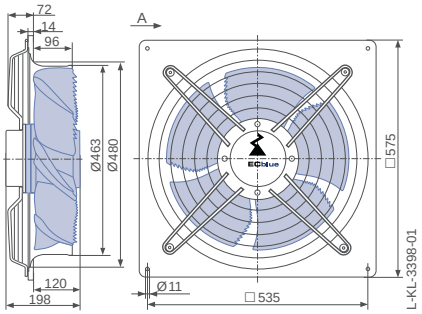

Airflow direction V

Design K - axial bolted, mounted for short bell mouth, guard grille pressure side

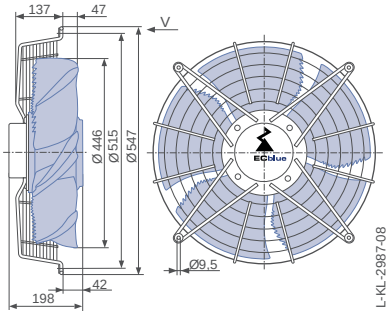

Performance data

Type	Characteristic curve	Speed n min⁻¹	Operating point	Current I A	Input power P_{sys} W	Suction side sound power level L_{WA5} dB(A)
FN045-ZI_.DC._5P4	I	1650	①	1.45	860	
			②	1.30	740	78
			③	1.05	580	76
	II	1320	④	1.05	560	
			⑤	0.84	390	72
			⑥	0.74	310	70
	III	990	⑦	0.66	250	
			⑧	0.54	180	65
			⑨	0.46	150	63
	IV	660	⑩	0.37	90	
			⑪	0.34	65	54
			⑫	0.32	60	53

Current values determined at 400V

Fan ordering information

Airflow direction A			Airflow direction V	
Design	W (guard grille suction side)	Q (guard grille suction side)	K (guard grille pressure side)	Q (guard grille pressure side)
		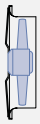		
Type	**FN045-ZIW.DC.A5P4**	**FN045-ZIQ.DC.A5P4**	**FN045-ZIK.DC.V5P4**	**FN045-ZIQ.DC.V5P4**
Article no.	**168965**	**168966**	**168968**	**168969**
Weight kg	12.20	15.60	12.50	15.20

Control technology

Control modules	Add-on modules	Operating terminal
		
Page 452	Page 463	Page 472

Design Q - square full bell mouth, guard grille pressure side

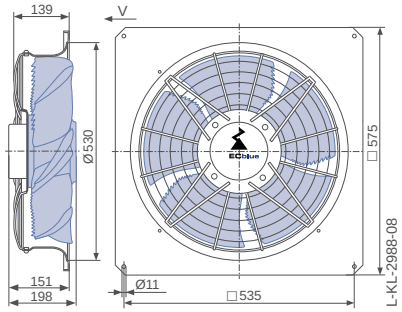

FE2owlet-EC blue

for single phase alternating current, 200-277 V

FN050



Description

Motor technology: EC
Rated voltage U_N: **1~ 200-277 V***
Rated frequency f_N: **50/60 Hz***
Input power P_{sys}: **380 W***
Rated current I_N: **1.95- 1.40 A***
Rated speed n_N: **1120 min^{-1}***
Thermal class: **THCL155***
Min. permitted ambient temperature $t_{R(min)}$: -35 °C
Max. permitted ambient temperature $t_{R(max)}$: 60 °C
Electrical connection: integrated Controller
Number of blades: 7
Protection class: IP54
Motor protection: Integrated active temperature management
Blades: High Performance Composite Material, uncoated, black
Rotor: Steel, 2 coat paint, ultramarine blue
Conformity: ErP 2015, CE
ErP-data
Efficiency η_{statA}: 41.7 %
Efficiency: N_{actual} = 50.8 / N_{target} = 40**
EC controller integrated
* Rated data
**ErP 2015

Characteristic curve

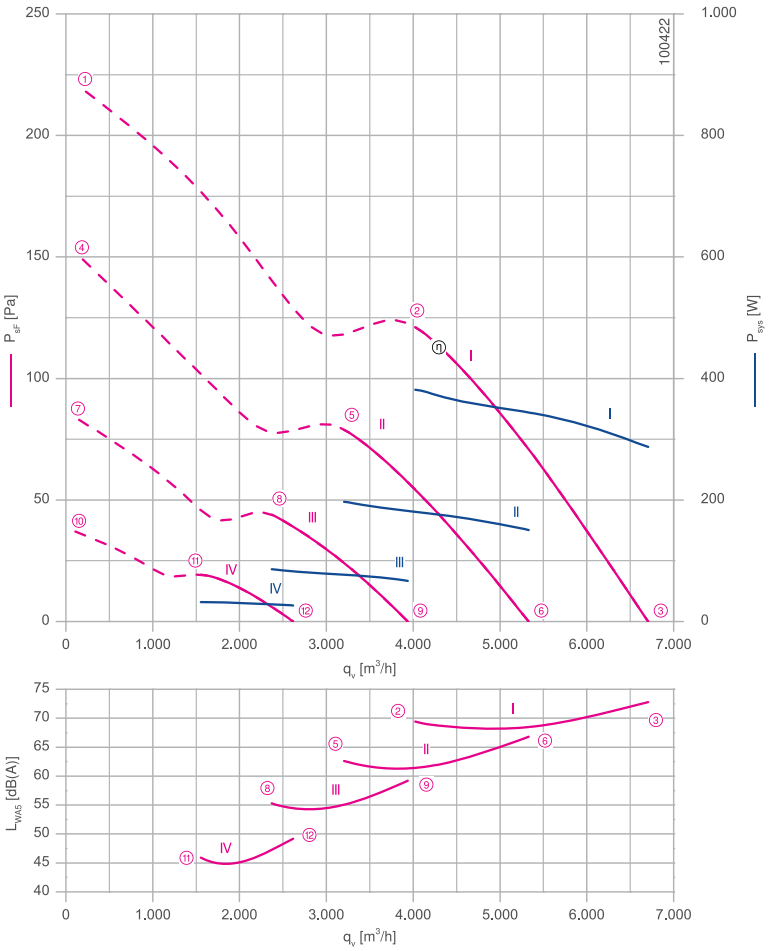

Measured in full bell mouth without guard grille in installation type A according to ISO 5801.

Connection diagram Page 529
1360-384

System components Page 430

Dimensions mm

Airflow direction A

Design W - axial bolted, mounting for short bell mouth, guard grille suction side

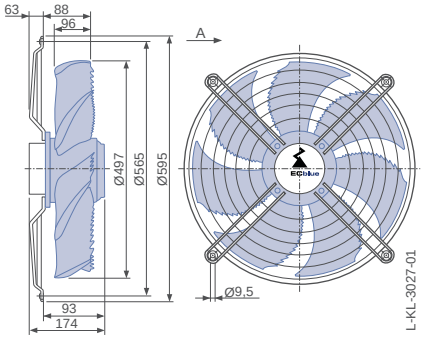

Design Q - square full bell mouth, guard grille suction side

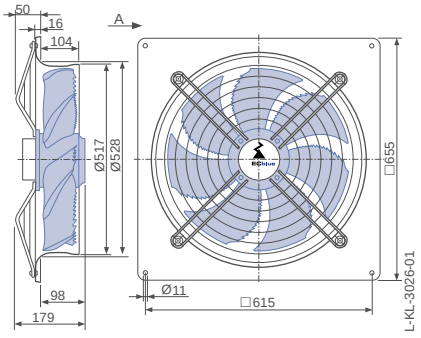

Airflow direction V

Design K - axial bolted, mounted for short bell mouth, guard grille pressure side

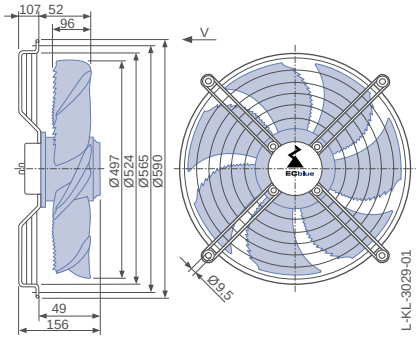

Performance data

Type	Characteristic curve	Speed n min⁻¹	Operating point	Current I A	Input power P_{sys} W	Suction side sound power level L_{WA5} dB(A)
FN050-6I_.BD._7P2	I	1120	①	2.00	460	
			②	1.70	380	69
			③	1.25	290	73
	II	900	④	1.15	260	
			⑤	0.86	200	63
			⑥	0.68	150	67
	III	670	⑦	0.50	110	
			⑧	0.40	85	55
			⑨	0.32	65	59
	IV	450	⑩	0.22	40	
			⑪	0.19	32	46
			⑫	0.17	26	49

Current values determined at 230V

Fan ordering information

Airflow direction A			Airflow direction V	
Design	W (guard grille suction side)	Q (guard grille suction side)	K (guard grille pressure side)	Q (guard grille pressure side)
		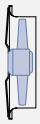		
Type	**FN050-6IW.BD.A7P2**	**FN050-6IQ.BD.A7P2**	**FN050-6IK.BD.V7P2**	**FN050-6IQ.BD.V7P2**
Article no.	**162127**	**162126**	**162145**	**162146**
Weight kg	9.40	15.80	9.50	14.30

Control technology

Control modules



Page 452

Design Q - square full bell mouth, guard grille pressure side

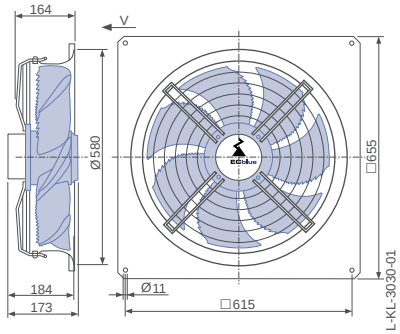

FE2owlet-EC blue

for single phase alternating current, 200-277 V

FN050



Description

Motor technology: EC
Rated voltage U_N: **1~ 200-277 V***
Rated frequency f_N: **50/60 Hz***
Input power P_{sys}: **0.84 kW***
Rated current I_N: **4.40- 3.20 A***
Rated speed n_N: **1440 min^{-1}***
Thermal class: **THCL155***
Min. permitted ambient temperature $t_{R(min)}$: -35 °C
Max. permitted ambient temperature $t_{R(max)}$: 60 °C
Electrical connection: integrated Controller
Number of blades: 7
Protection class: IP54
Motor protection: Integrated active temperature management
Blades: High Performance Composite Material, uncoated, black
Rotor: Steel, 2 coat paint, ultramarine blue
Conformity: ErP 2015, CE, UL

ErP-data

Efficiency η_{statA}: 40.1 %
Efficiency: N_{actual} = 46.9 / N_{target} = 40**
EC controller integrated
* Rated data
**ErP 2015

Characteristic curve

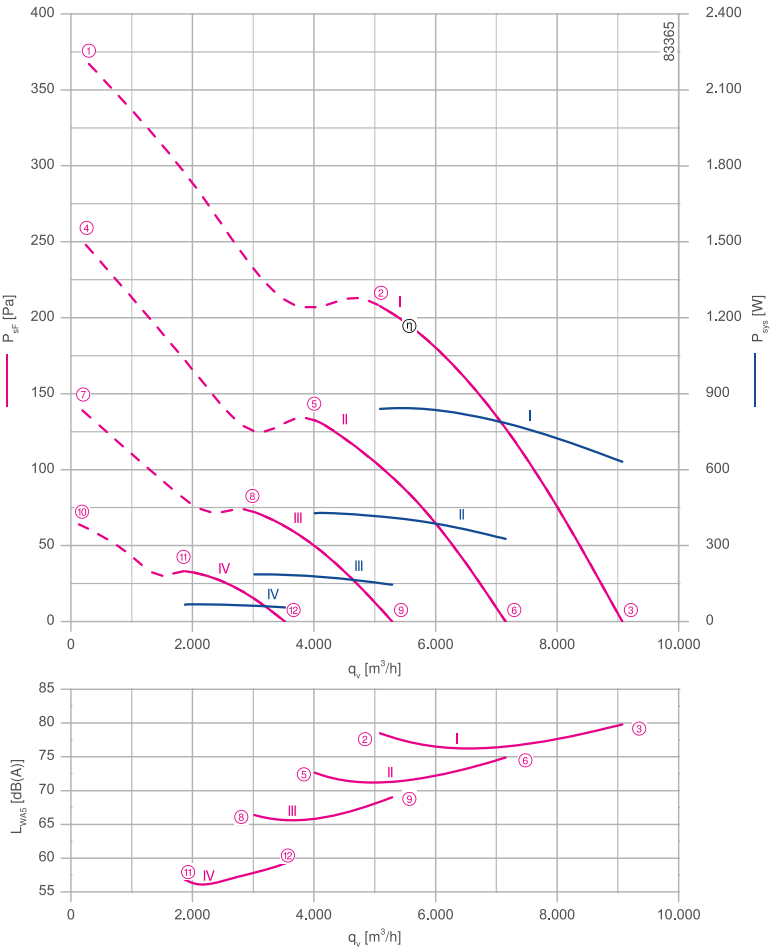

Measured in full bell mouth without guard grille in installation type A according to ISO 5801

Connection diagram Page 530
1360-403

System components Page 430

Dimensions mm

Airflow direction

Design W - axial bolted, mounting for short bell mouth, guard grille suction side

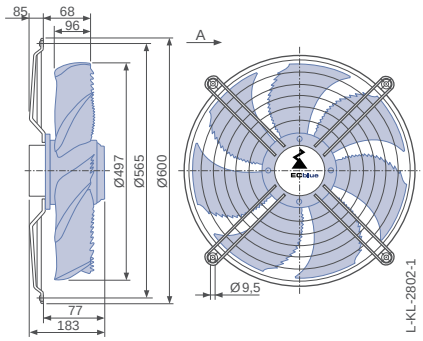

Design Q - square full bell mouth, guard grille suction side

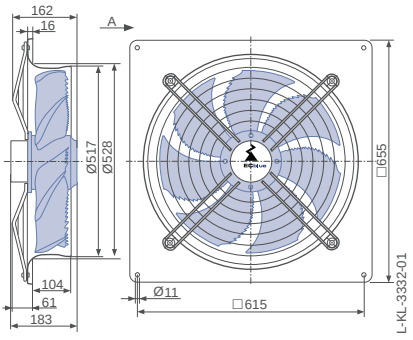

Airflow direction

Design K - axial bolted, mounted for short bell mouth, guard grille pressure side

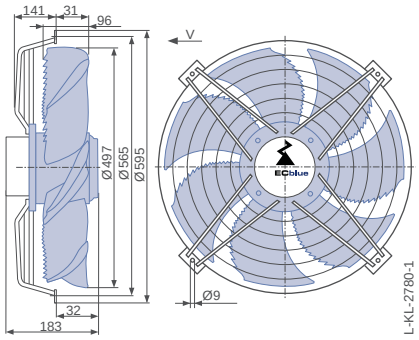

Performance data

Type	Characteristic curve	Speed n min⁻¹	Operating point	Current I A	Input power P_{sys} W	Suction side sound power level L_{WA5} dB(A)
FN050-ZI_.DC._7P2	I	1440	①	4.80	1050	
			②	3.80	840	79
			③	2.90	640	80
	II	1150	④	2.70	580	
			⑤	2.00	420	73
			⑥	1.55	330	75
	III	860	⑦	1.15	250	
			⑧	0.86	190	66
			⑨	0.68	150	69
	IV	580	⑩	0.46	85	
			⑪	0.39	70	56
			⑫	0.35	55	59

Current values determined at 230V

Fan ordering information

Airflow direction A			Airflow direction V	
Design	W (guard grille suction side)	Q (guard grille suction side)	K (guard grille pressure side)	Q (guard grille pressure side)
		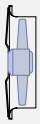		
Type	**FN050-ZIW.DC.A7P2**	**FN050-ZIQ.DC.A7P2**	**FN050-ZIK.DC.V7P2**	**FN050-ZIQ.DC.V7P2**
Article no.	**154375**	**154381**	**154399**	**154405**
Weight kg	12.30	18.70	13.90	17.60

Control technology

Control modules	Add-on modules	Operating terminal
		
Page 452	Page 463	Page 472

Design Q - square full bell mouth, guard grille pressure side

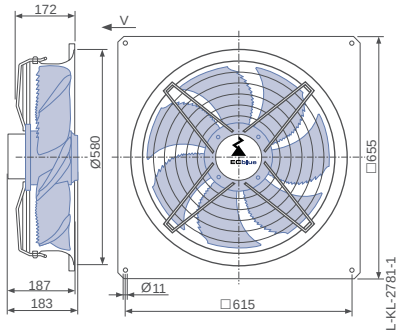

FE2owlet-ECblue

for three phase alternating current, 200-240 V

FN050



Characteristic curve

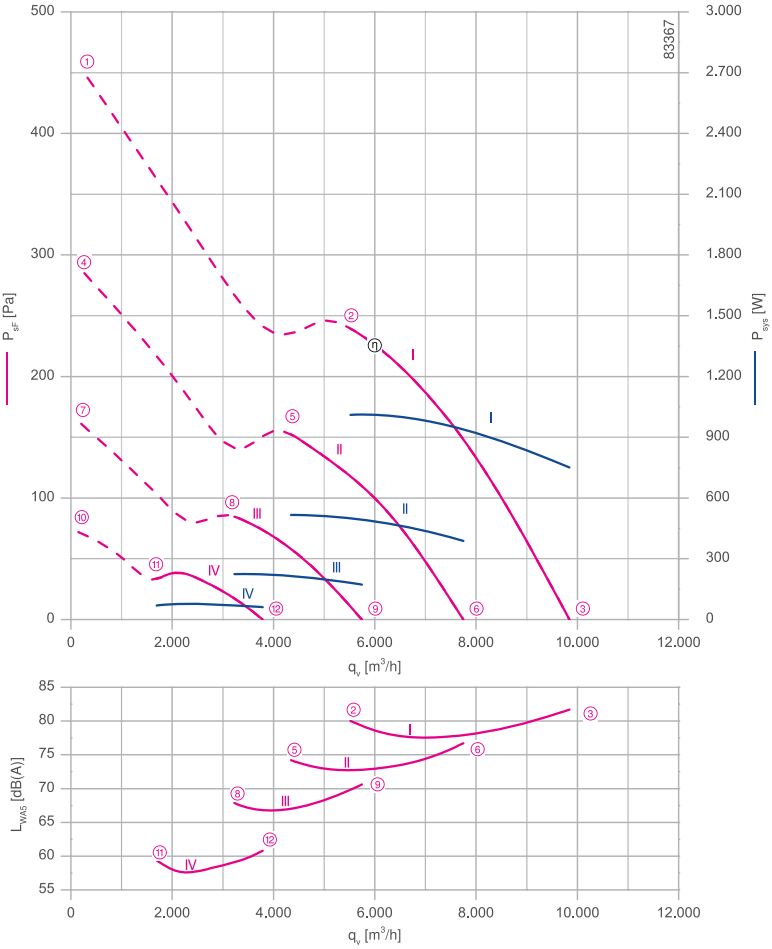

Measured in full bell mouth without guard grille in installation type A according to ISO 5801

Description

Motor technology: EC
Rated voltage U_N: **3~ 200-240 V***
Rated frequency f_N: **50/60 Hz***
Input power P_{sys}: **1.00 kW***
Rated current I_N: **3.00- 2.50 A***
Rated speed n_N: **1550 min^{-1}***
Thermal class: **THCL155***
Min. permitted ambient temperature $t_{R(min)}$: -35 °C
Max. permitted ambient temperature $t_{R(max)}$: 60 °C
Electrical connection: integrated Controller
Number of blades: 7
Protection class: IP54
Motor protection: Integrated active temperature management
Blades: High Performance Composite Material, uncoated, black
Rotor: Steel, 2 coat paint, ultramarine blue
Conformity: ErP 2015, CE, UL

ErP-data

Efficiency η_{statA}: 41.6 %
Efficiency: N_{actual} = 47.9 / N_{target} = 40**
EC controller integrated
* Rated data
**ErP 2015

Connection diagram Page 530
1360-403

System components Page 430

Dimensions mm

Airflow direction A

Design W - axial bolted, mounting for short bell mouth, guard grille suction side

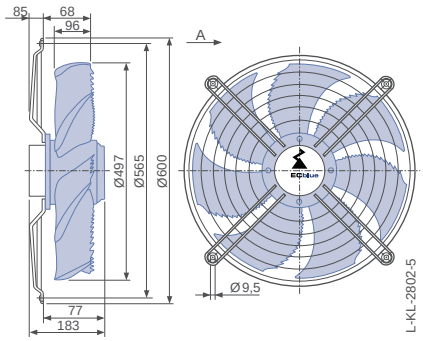

Design Q - square full bell mouth, guard grille suction side

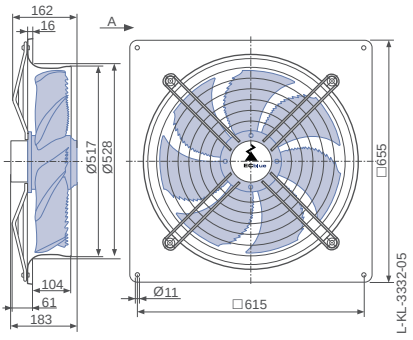

Airflow direction V

Design K - axial bolted, mounted for short bell mouth, guard grille pressure side

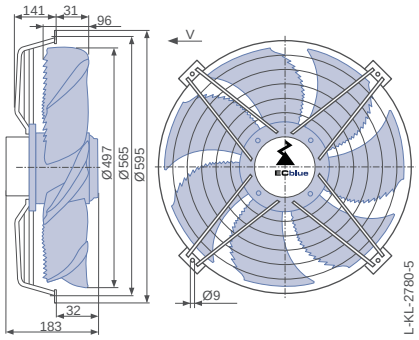

Performance data

Type	Characteristic curve	Speed n min⁻¹	Operating point	Current I A	Input power P_{sys} W	Suction side sound power level L_{WA5} dB(A)
FN050-ZI_.DC._7P2	I	1550	①	3.60	1400	
			②	2.60	1000	80
			③	2.00	760	82
	II	1240	④	1.85	700	
			⑤	1.40	520	74
			⑥	1.05	390	77
	III	930	⑦	0.84	300	
			⑧	0.66	220	68
			⑨	0.54	170	71
	IV	620	⑩	0.38	100	
			⑪	0.32	75	57
			⑫	0.28	60	61

Current values determined at 230V

Fan ordering information

Airflow direction A			Airflow direction V	
Design	W (guard grille suction side)	Q (guard grille suction side)	K (guard grille pressure side)	Q (guard grille pressure side)
		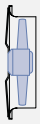		
Type	**FN050-ZIW.DC.A7P2**	**FN050-ZIQ.DC.A7P2**	**FN050-ZIK.DC.V7P2**	**FN050-ZIQ.DC.V7P2**
Article no.	**154373**	**154379**	**154397**	**154403**
Weight kg	12.30	18.70	13.90	17.60

Control technology

Control modules	Add-on modules	Operating terminal
		
Page 452	Page 463	Page 472

Design Q - square full bell mouth, guard grille pressure side

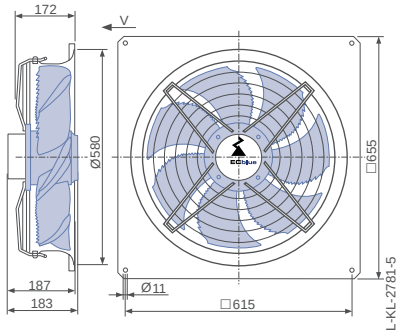

FE2owlet-ECblue

for three phase alternating current, 380-480 V

FN050



Description

Motor technology: EC
Rated voltage U_N: **3~ 380-480 V***
Rated frequency f_N: **50/60 Hz***
Input power P_{sys}: **1.00 kW***
Rated current I_N: **1.70- 1.35 A***
Rated speed n_N: **1550 min^{-1}***
Thermal class: **THCL155***
Min. permitted ambient temperature $t_{R(min)}$: -35 °C
Max. permitted ambient temperature $t_{R(max)}$: 60 °C
Electrical connection: integrated Controller
Number of blades: 7
Protection class: IP54
Motor protection: Integrated active temperature management
Blades: High Performance Composite Material, uncoated, black
Rotor: Steel, 2 coat paint, ultramarine blue
Conformity: ErP 2015, CE, UL
ErP-data
Efficiency η_{statA}: 41.8 %
Efficiency: N_{actual} = 48.1 / N_{target} = 40**
EC controller integrated
* Rated data
**ErP 2015

Characteristic curve

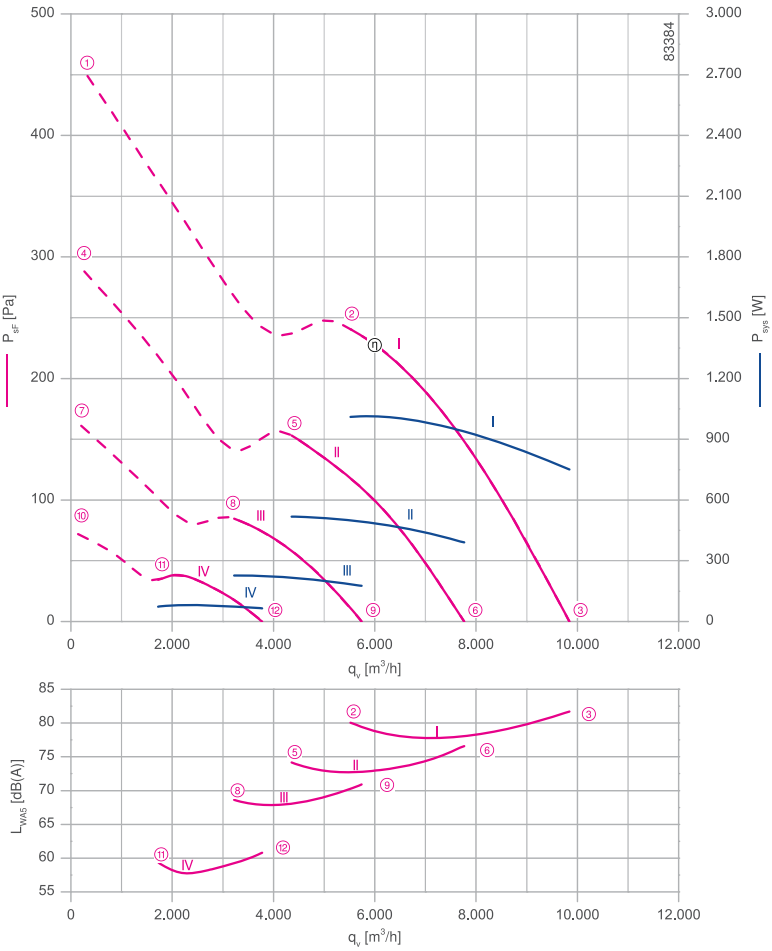

Measured in full bell mouth without guard grille in installation type A according to ISO 5801

Connection diagram Page 530
1360-403

System components Page 430

Dimensions mm

Airflow direction A

Design W - axial bolted, mounting for short bell mouth, guard grille suction side

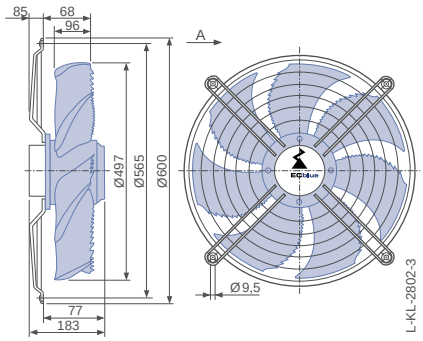

Design Q - square full bell mouth, guard grille suction side

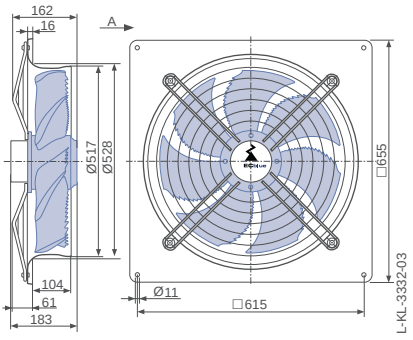

Airflow direction V

Design K - axial bolted, mounted for short bell mouth, guard grille pressure side

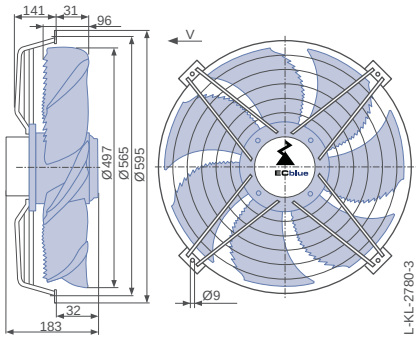

Performance data

Type	Characteristic curve	Speed n min⁻¹	Operating point	Current I A	Input power P_{sys} W	Suction side sound power level L_{WA5} dB(A)
FN050-ZI_.DC._7P2	I	1550	①	2.10	1400	
			②	1.60	1000	80
			③	1.25	760	82
	II	1240	④	1.15	700	
			⑤	0.92	520	74
			⑥	0.76	390	77
	III	930	⑦	0.64	300	
			⑧	0.54	230	69
			⑨	0.46	180	71
	IV	620	⑩	0.33	100	
			⑪	0.29	80	58
			⑫	0.26	65	61

Current values determined at 400V

Fan ordering information

Airflow direction A			Airflow direction V	
Design	W (guard grille suction side)	Q (guard grille suction side)	K (guard grille pressure side)	Q (guard grille pressure side)
		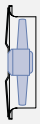		
Type	**FN050-ZIW.DC.A7P2**	**FN050-ZIQ.DC.A7P2**	**FN050-ZIK.DC.V7P2**	**FN050-ZIQ.DC.V7P2**
Article no.	**154371**	**154377**	**154395**	**154401**
Weight kg	12.30	18.70	13.90	17.60

Control technology

Control modules	Add-on modules	Operating terminal
		
Page 452	Page 463	Page 472

Design Q - square full bell mouth, guard grille pressure side

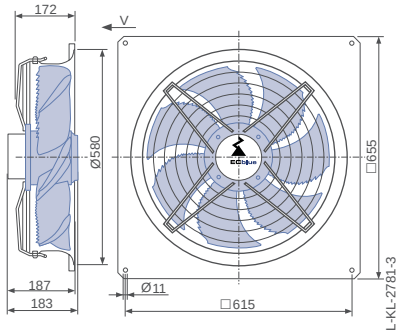

FE2owlet-EC blue

for single phase alternating current, 200-277 V

FN056



Description

Motor technology: EC
Rated voltage U_N: **1~ 200-277 V***
Rated frequency f_N: **50/60 Hz***
Input power P_{sys}: **400 W***
Rated current I_N: **2.00- 1.45 A***
Rated speed n_N: **940 min^{-1}***
Thermal class: **THCL155***
Min. permitted ambient temperature $t_{R(min)}$: -35 °C
Max. permitted ambient temperature $t_{R(max)}$: 50 °C
Electrical connection: integrated Controller
Number of blades: 5
Protection class: IP54
Motor protection: Integrated active temperature management
Blades: High Performance Composite Material, uncoated, black
Rotor: Steel, 2 coat paint, ultramarine blue
Conformity: ErP 2015, CE
ErP-data
Efficiency η_{statA}: 39.7 %
Efficiency: N_{actual} = 48.6 / N_{target} = 40**
EC controller integrated
* Rated data
**ErP 2015

Characteristic curve

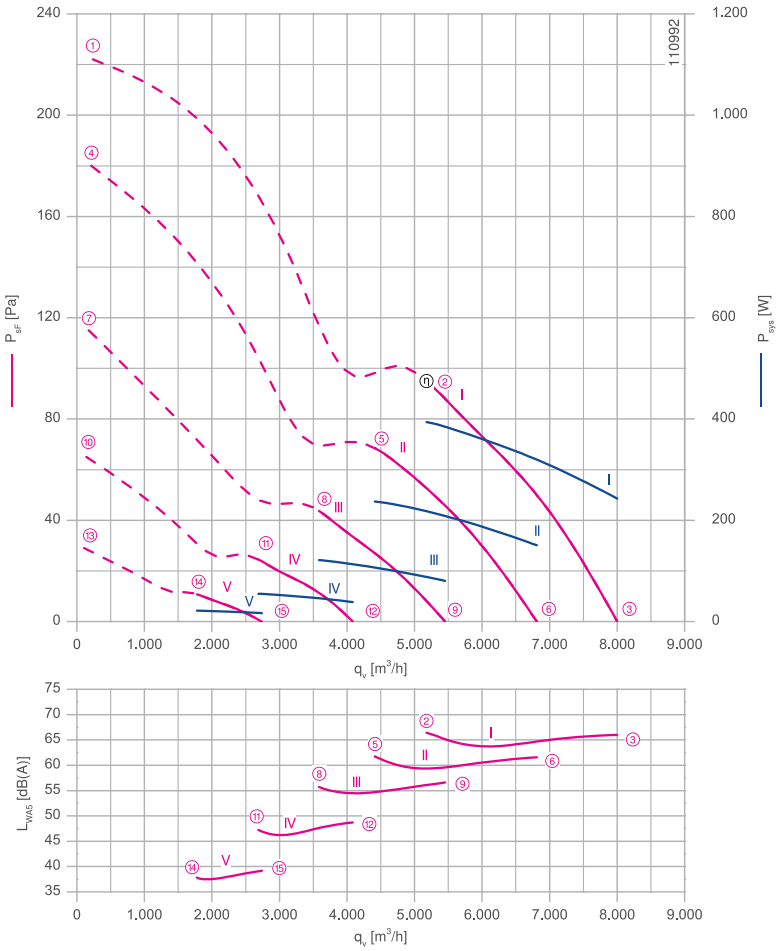

Measured in full bell mouth without guard grille in installation type A according to ISO 5801.

Connection diagram Page 529
1360-384

System components Page 430

Dimensions mm

Airflow direction A

Design W - axial bolted, mounting for short bell mouth, guard grille suction side

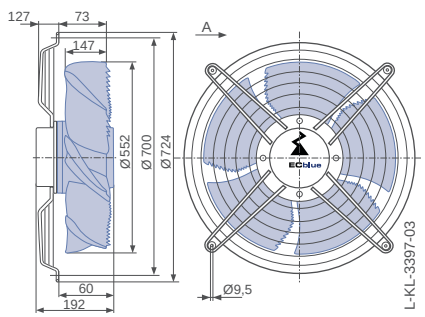

Design Q - square full bell mouth, guard grille suction side

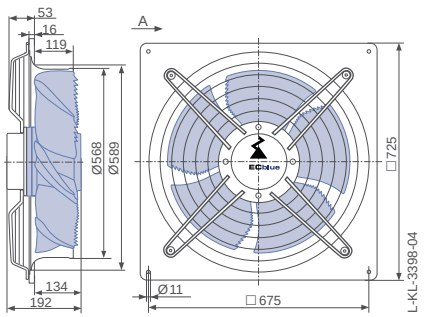

Airflow direction V

Design K - axial bolted, mounted for short bell mouth, guard grille pressure side

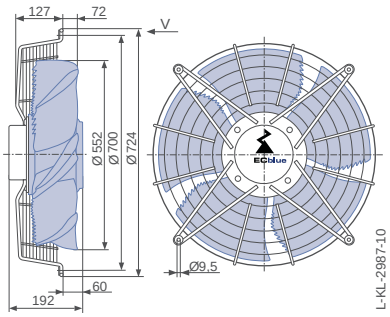

Performance data

Type	Characteristic curve	Speed n min⁻¹	Operating point	Current I A	Input power P_{sys} W	Suction side sound power level L_{WA5} dB(A)	Maximum ambient temperature t_R °C
FN056-6I_.BD._5P4	I	940	①	2.40	560		50
			②	1.70	390	66	
			③	1.05	240	66	
	II	800	④	1.65	390		60
			⑤	1.05	240	62	
			⑥	0.66	150	62	
	III	640	⑦	0.84	190		
			⑧	0.54	120	56	
			⑨	0.37	80	57	
	IV	480	⑩	0.39	85		
			⑪	0.27	55	47	
			⑫	0.22	38	49	
	V	320	⑬	0.18	30		
			⑭	0.16	22	38	
			⑮	0.15	17	39	

Current values determined at 230V

Fan ordering information

Airflow direction A			Airflow direction V	
Design	W (guard grille suction side)	Q (guard grille suction side)	K (guard grille pressure side)	Q (guard grille pressure side)
		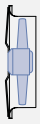		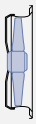
Type	**FN056-6IW.BD.A5P4**	**FN056-6IQ.BD.A5P4**	**FN056-6IK.BD.V5P4**	**FN056-6IQ.BD.V5P4**
Article no.	**165269**	**165259**	**165272**	**165273**
Weight kg	11.50	18.80	11.50	17.90

Control technology

Control modules



Page 452

Design Q - square full bell mouth, guard grille pressure side

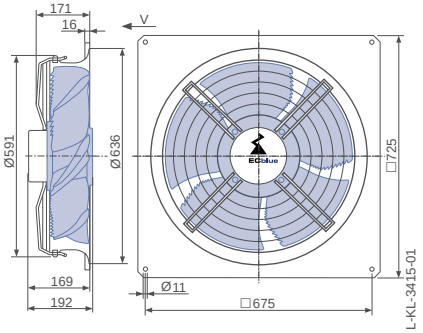

FE2owlet-ECblue

for single phase alternating current, 200-277 V

FN056



Description

Motor technology: EC
Rated voltage U_N: **1~ 200-277 V***
Rated frequency f_N: **50/60 Hz***
Input power P_{sys}: **1.05 kW***
Rated current I_N: **5.60- 4.00 A***
Rated speed n_N: **1350 min^{-1}***
Thermal class: **THCL155***
Min. permitted ambient temperature $t_{R(min)}$: -35 °C
Max. permitted ambient temperature $t_{R(max)}$: 50 °C
Electrical connection: integrated Controller
Number of blades: 5
Protection class: IP54
Motor protection: Integrated active temperature management
Blades: High Performance Composite Material, uncoated, black
Rotor: Steel, 2 coat paint, ultramarine blue
Conformity: ErP 2015, CE, UL
ErP-data
Efficiency η_{statA}: 43.9 %
Efficiency: N_{actual} = 50.2 / N_{target} = 40**
EC controller integrated
* Rated data
**ErP 2015

Characteristic curve

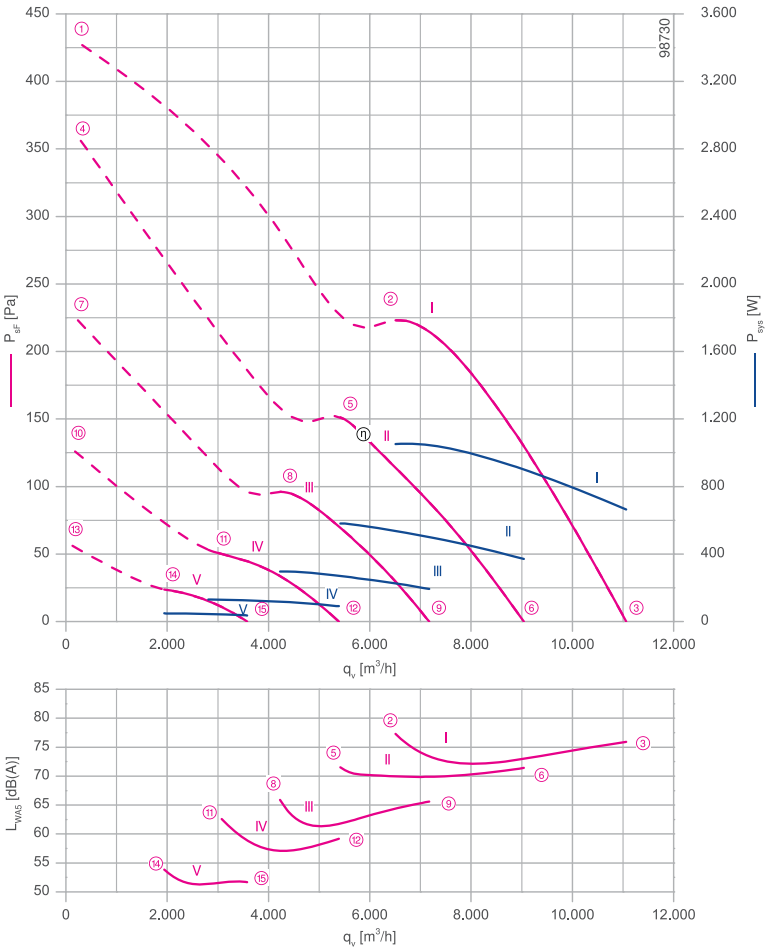

Measured in full bell mouth without guard grille in installation type A according to ISO 5801

Connection diagram Page 530
1360-403

System components Page 430

Dimensions mm

Airflow direction A

Design W - axial bolted, mounting for short bell mouth, guard grille suction side

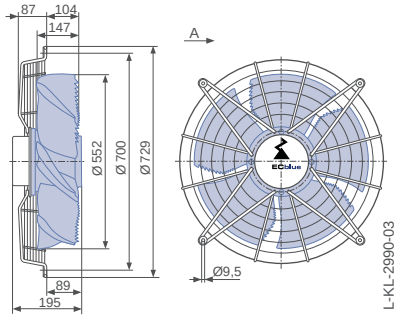

Design Q - square full bell mouth, guard grille suction side

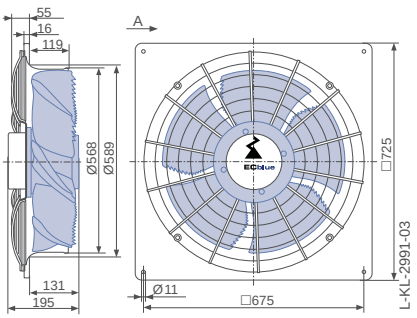

Airflow direction V

Design K - axial bolted, mounted for short bell mouth, guard grille pressure side

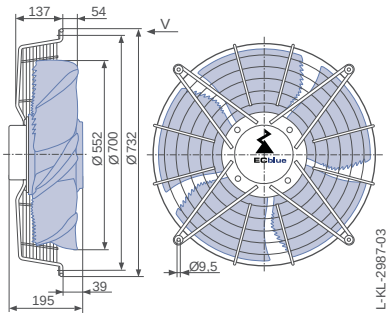

Performance data

Type	Characteristic curve	Speed n min⁻¹	Operating point	Current I A	Input power P_{sys} W	Suction side sound power level L_{WA5} dB(A)	Maximum ambient temperature t_R °C
FN056-ZI_.DC._5P4	I	1350	①	5.80	1250		50
			②	4.80	1050	78	
			③	3.10	660	76	
	II	1110	④	4.40	940		60
			⑤	2.80	580	72	
			⑥	1.80	370	71	
	III	880	⑦	2.30	460		70
			⑧	1.40	300	66	
			⑨	0.88	190	66	
	IV	660	⑩	0.92	200		
			⑪	0.64	130	59	
			⑫	0.46	90	59	
	V	440	⑬	0.39	70		
			⑭	0.31	50	52	
			⑮	0.28	36	52	

Current values determined at 230V

Fan ordering information

Airflow direction A			Airflow direction V	
Design	W (guard grille suction side)	Q (guard grille suction side)	K (guard grille pressure side)	Q (guard grille pressure side)
		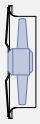		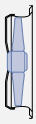
Type	**FN056-ZIW.DC.A5P4**	**FN056-ZIQ.DC.A5P4**	**FN056-ZIK.DC.V5P4**	**FN056-ZIQ.DC.V5P4**
Article no.	**162069**	**162067**	**162075**	**162077**
Weight kg	13.60	21.00	14.10	20.40

Control technology

Control modules	Add-on modules	Operating terminal
		
Page 452	Page 463	Page 472

Design Q - square full bell mouth, guard grille pressure side

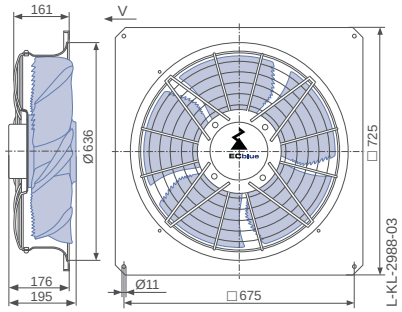

FE2owlet-ECblue

for three phase alternating current, 200-240 V

FN056



Description

Motor technology: EC
Rated voltage U_N: **3~ 200-240 V***
Rated frequency f_N: **50/60 Hz***
Input power P_{sys}: **1.10 kW***
Rated current I_N: **3.40- 2.80 A***
Rated speed n_N: **1380 min^{-1}***
Thermal class: **THCL155***
Min. permitted ambient temperature $t_{R(min)}$: -35 °C
Max. permitted ambient temperature $t_{R(max)}$: 60 °C
Electrical connection: integrated Controller
Number of blades: 5
Protection class: IP54
Motor protection: Integrated active temperature management
Blades: High Performance Composite Material, uncoated, black
Rotor: Steel, 2 coat paint, ultramarine blue
Conformity: ErP 2015, CE, UL

ErP-data

Efficiency η_{statA}: 45.4 %
Efficiency: N_{actual} = 51.6 / N_{target} = 40**
EC controller integrated
* Rated data
**ErP 2015

Characteristic curve

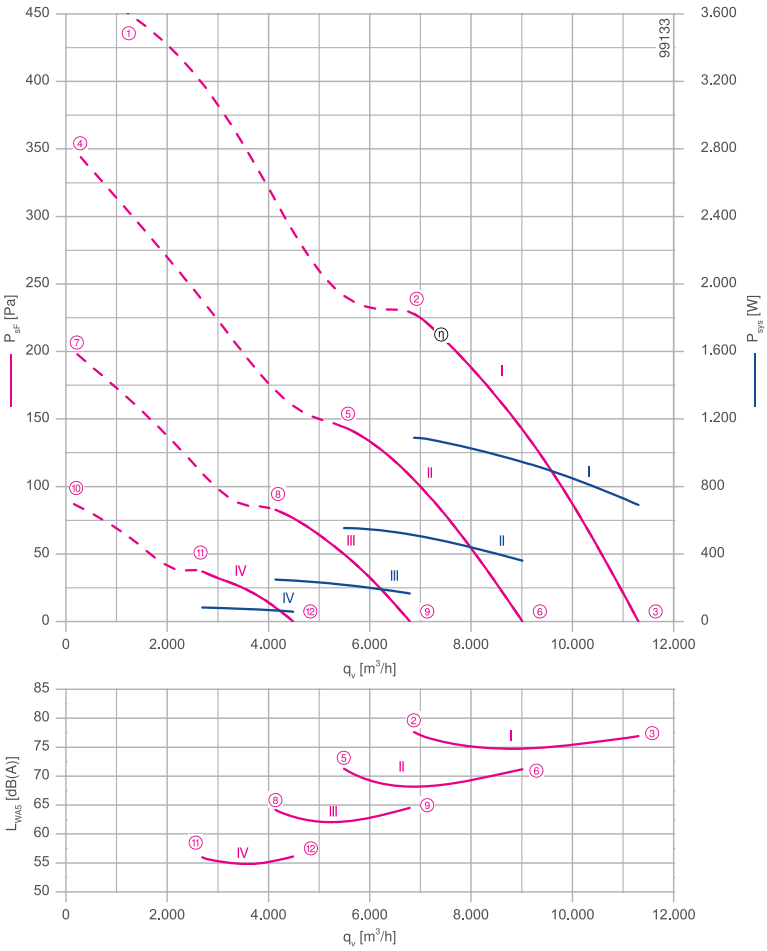

Measured in full bell mouth without guard grille in installation type A according to ISO 5801

Connection diagram Page 530
1360-403

System components Page 430

Dimensions mm

Airflow direction A

Design W - axial bolted, mounting for short bell mouth, guard grille suction side

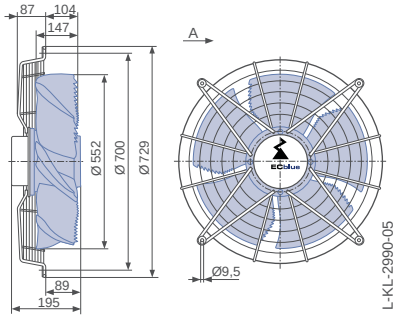

Design Q - square full bell mouth, guard grille suction side

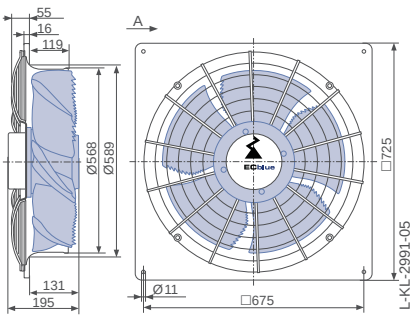

Airflow direction V

Design K - axial bolted, mounted for short bell mouth, guard grille pressure side

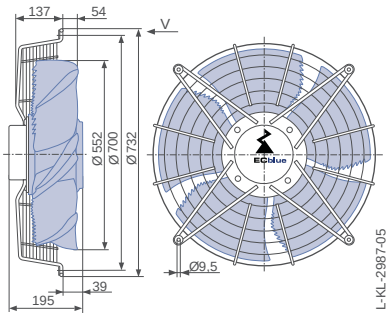

Performance data

Type	Characteristic curve	Speed n min⁻¹	Operating point	Current I A	Input power P_{sys} W	Suction side sound power level L_{WA5} dB(A)	Maximum ambient temperature t_R °C
FN056-ZI_.DC._5P4	I	1380	①	3.90	1450		60
			②	2.90	1100	78	
			③	1.90	700	77	
	II	1100	④	2.40	900		70
			⑤	1.55	560	72	
			⑥	1.05	360	71	
	III	830	⑦	1.15	390		
			⑧	0.78	250	64	
			⑨	0.60	170	65	
	IV	550	⑩	0.50	120		
			⑪	0.38	85	56	
			⑫	0.31	60	56	

Current values determined at 230V

Fan ordering information

Airflow direction A			Airflow direction V	
Design	W (guard grille suction side)	Q (guard grille suction side)	K (guard grille pressure side)	Q (guard grille pressure side)
		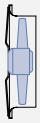		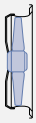
Type	**FN056-ZIW.DC.A5P4**	**FN056-ZIQ.DC.A5P4**	**FN056-ZIK.DC.V5P4**	**FN056-ZIQ.DC.V5P4**
Article no.	**162053**	**162051**	**162059**	**162061**
Weight kg	13.60	21.00	14.10	20.40

Control technology

Control modules	Add-on modules	Operating terminal
		
Page 452	Page 463	Page 472

Design Q - square full bell mouth, guard grille pressure side

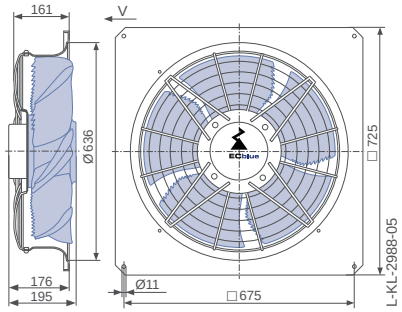

FE2owlet-EC blue

for three phase alternating current, 380-480 V

FN056



Characteristic curve

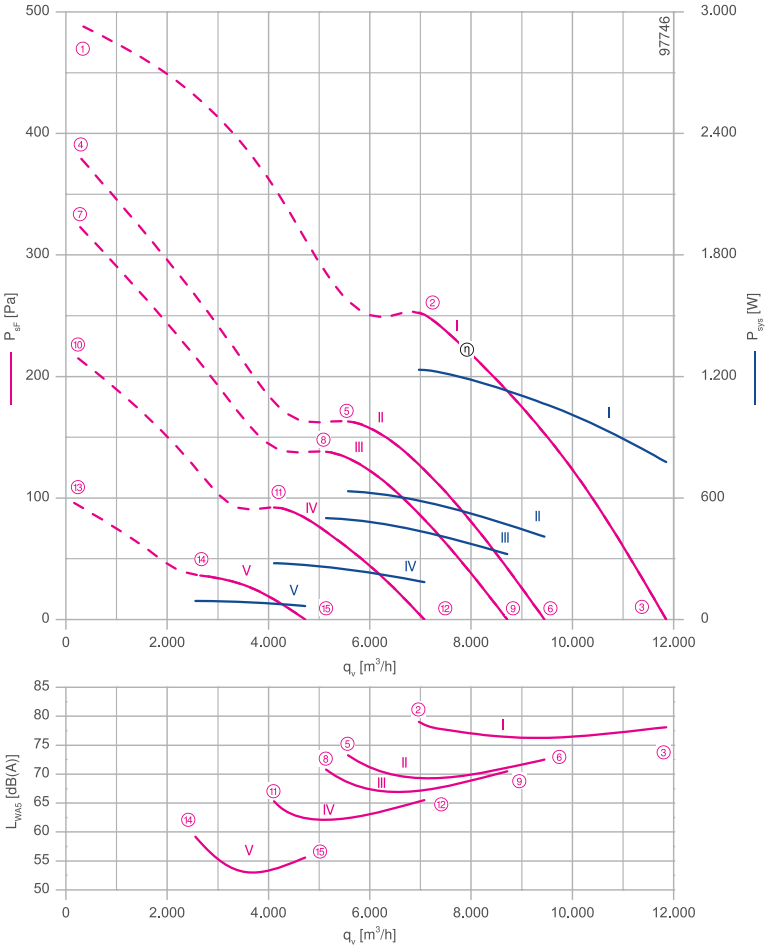

Measured in full bell mouth without guard grille in installation type A according to ISO 5801

Description

Motor technology: EC
Rated voltage U_N: **3~ 380-480 V***
Rated frequency f_N: **50/60 Hz***
Input power P_{sys}: **1.25 kW***
Rated current I_N: **2.10- 1.65 A***
Rated speed n_N: **1450 min^{-1}***
Thermal class: **THCL155***
Min. permitted ambient temperature $t_{R(min)}$: -35 °C
Max. permitted ambient temperature $t_{R(max)}$: 60 °C
Electrical connection: integrated Controller
Number of blades: 5
Protection class: IP54
Motor protection: Integrated active temperature management
Blades: High Performance Composite Material, uncoated, black
Rotor: Steel, 2 coat paint, ultramarine blue
Conformity: ErP 2015, CE, UL
ErP-data
Efficiency η_{statA}: 45.2 %
Efficiency: N_{actual} = 51.0 / N_{target} = 40**
EC controller integrated
* Rated data
**ErP 2015

Connection diagram Page 530
1360-403

System components Page 430

Dimensions mm

Airflow direction A

Design W - axial bolted, mounting for short bell mouth, guard grille suction side

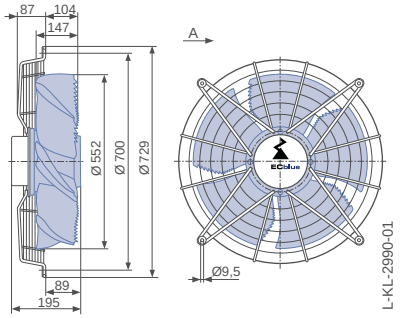

Design Q - square full bell mouth, guard grille suction side

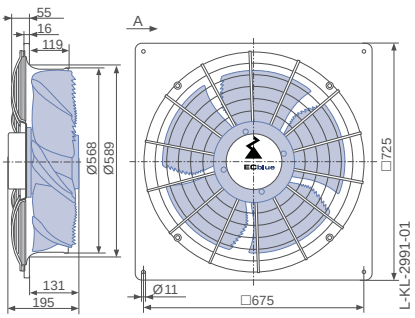

Airflow direction V

Design K - axial bolted, mounted for short bell mouth, guard grille pressure side

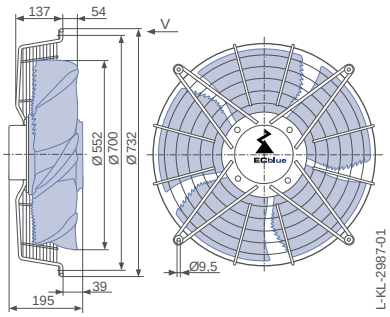

Performance data

Type	Characteristic curve	Speed n min⁻¹	Operating point	Current I A	Input power P_{sys} W	Suction side sound power level L_{WA5} dB(A)	Maximum ambient temperature t_R °C
FN056-ZI_.DC._5P4	I	1450	①	2.40	1550		60
			②	1.95	1250	79	
			③	1.30	780	78	
	II	1160	④	1.65	1000		
			⑤	1.10	640	73	
			⑥	0.80	400	73	
	III	1070	⑦	1.35	800		70
			⑧	0.94	500	71	
			⑨	0.72	320	71	
	IV	870	⑩	0.84	440		
			⑪	0.64	280	65	
			⑫	0.50	180	66	
	V	580	⑬	0.40	140		
			⑭	0.32	95	55	
			⑮	0.26	65	56	

Current values determined at 400V

Fan ordering information

Airflow direction A | **Airflow direction V**

Design	W (guard grille suction side)	Q (guard grille suction side)	K (guard grille pressure side)	Q (guard grille pressure side)
		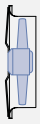		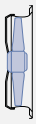
Type	**FN056-ZIW.DC.A5P4**	**FN056-ZIQ.DC.A5P4**	**FN056-ZIK.DC.V5P4**	**FN056-ZIQ.DC.V5P4**
Article no.	**162037**	**162035**	**162043**	**162045**
Weight kg	13.60	21.00	14.10	20.40

Control technology

Control modules	Add-on modules	Operating terminal
		
Page 452	Page 463	Page 472

Design Q - square full bell mouth, guard grille pressure side

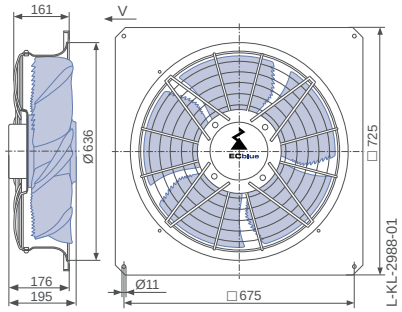

FE2owlet-EC blue

for single phase alternating current, 200-277 V

FN063



Description

Motor technology: EC
Rated voltage U_N: **1~ 200-277 V***
Rated frequency f_N: **50/60 Hz***
Input power P_{sys}: **230 W***
Rated current I_N: **1.20- 0.86 A***
Rated speed n_N: **660 min^{-1}***
Thermal class: **THCL155***
Min. permitted ambient temperature $t_{R(min)}$: -35 °C
Max. permitted ambient temperature $t_{R(max)}$: 60 °C
Electrical connection: integrated Controller
Number of blades: 7
Protection class: IP54
Motor protection: Integrated active temperature management
Blades: High Performance Composite Material, uncoated, black
Rotor: Steel, 2 coat paint, ultramarine blue
Conformity: ErP 2015, CE
ErP-data
Efficiency η_{statA}: 43.2 %
Efficiency: N_{actual} = 53.9 / N_{target} = 40**
EC controller integrated
* Rated data
**ErP 2015

Characteristic curve

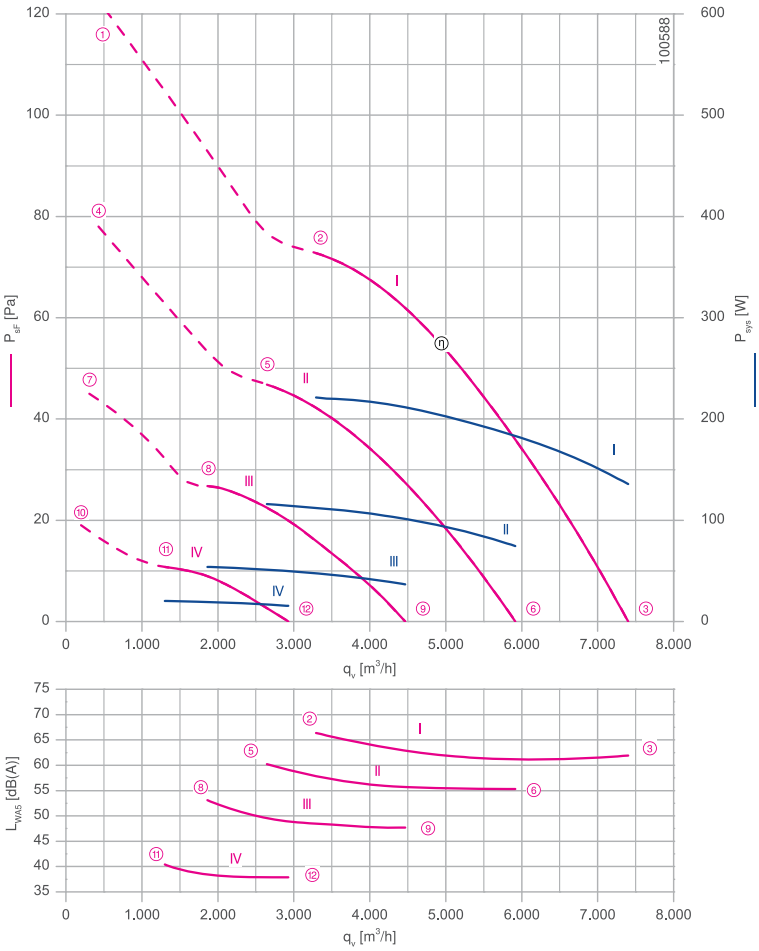

Measured in full bell mouth without guard grille in installation type A according to ISO 5801.

Connection diagram Page 529
1360-384

System components Page 430

Dimensions mm

Airflow direction A

Design W - axial bolted, mounting for short bell mouth, guard grille suction side

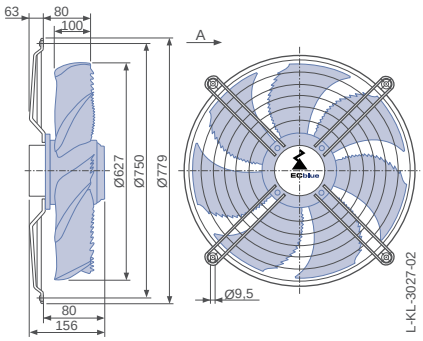

Design Q - square full bell mouth, guard grille suction side

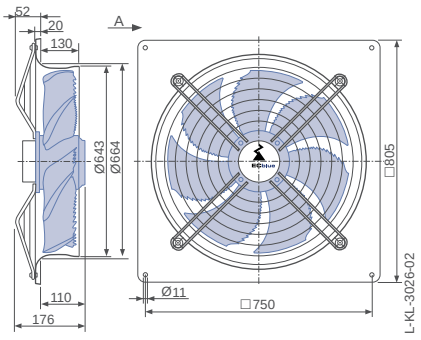

Airflow direction V

Design K - axial bolted, mounted for short bell mouth, guard grille pressure side

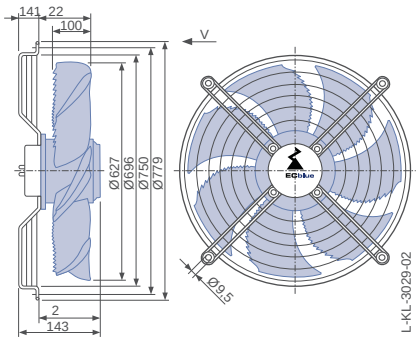

Performance data

Type	Characteristic curve	Speed n min⁻¹	Operating point	Current I A	Input power P_{sys} W	Suction side sound power level L_{WA5} dB(A)
FN063-6I_.BD._7P2	I	660	①	1.40	320	
			②	0.98	220	67
			③	0.60	140	62
	II	530	④	0.70	160	
			⑤	0.52	120	60
			⑥	0.35	75	55
	III	400	⑦	0.34	70	
			⑧	0.27	55	52
			⑨	0.21	36	48
	IV	260	⑩	0.17	26	
			⑪	0.16	20	41
			⑫	0.15	15	38

Current values determined at 230V

Fan ordering information

Airflow direction A			Airflow direction V	
Design	W (guard grille suction side)	Q (guard grille suction side)	K (guard grille pressure side)	Q (guard grille pressure side)
		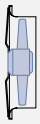		
Type	**FN063-6IW.BD.A7P2**	**FN063-6IQ.BD.A7P2**	**FN063-6IK.BD.V7P2**	**FN063-6IQ.BD.V7P2**
Article no.	**162130**	**162129**	**162148**	**162149**
Weight kg	11.30	21.40	12.00	20.60

Control technology

Control modules



Page 452

Design Q - square full bell mouth, guard grille pressure side

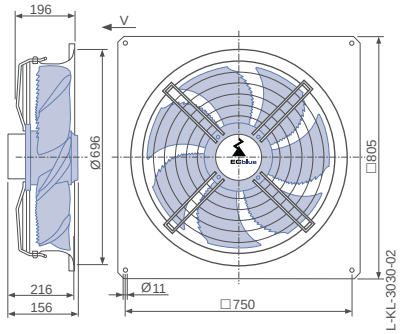

FE2owlet-ECblue

for single phase alternating current, 200-277 V

FN063



Description

Motor technology: EC
Rated voltage U_N: **1~ 200-277 V***
Rated frequency f_N: **50/60 Hz***
Input power P_{sys}: **0.85 kW***
Rated current I_N: **4.30- 3.10 A***
Rated speed n_N: **1050 min^{-1}***
Thermal class: **THCL155***
Min. permitted ambient temperature $t_{R(min)}$: -35 °C
Max. permitted ambient temperature $t_{R(max)}$: 60 °C
Electrical connection: integrated Controller
Number of blades: 7
Protection class: IP54
Motor protection: Integrated active temperature management
Blades: High Performance Composite Material, uncoated, black
Rotor: Steel, 2 coat paint, ultramarine blue
Conformity: ErP 2015, CE, UL
ErP-data
Efficiency η_{statA}: 46.3 %
Efficiency: N_{actual} = 53.3 / N_{target} = 40**
EC controller integrated
* Rated data
**ErP 2015

Characteristic curve

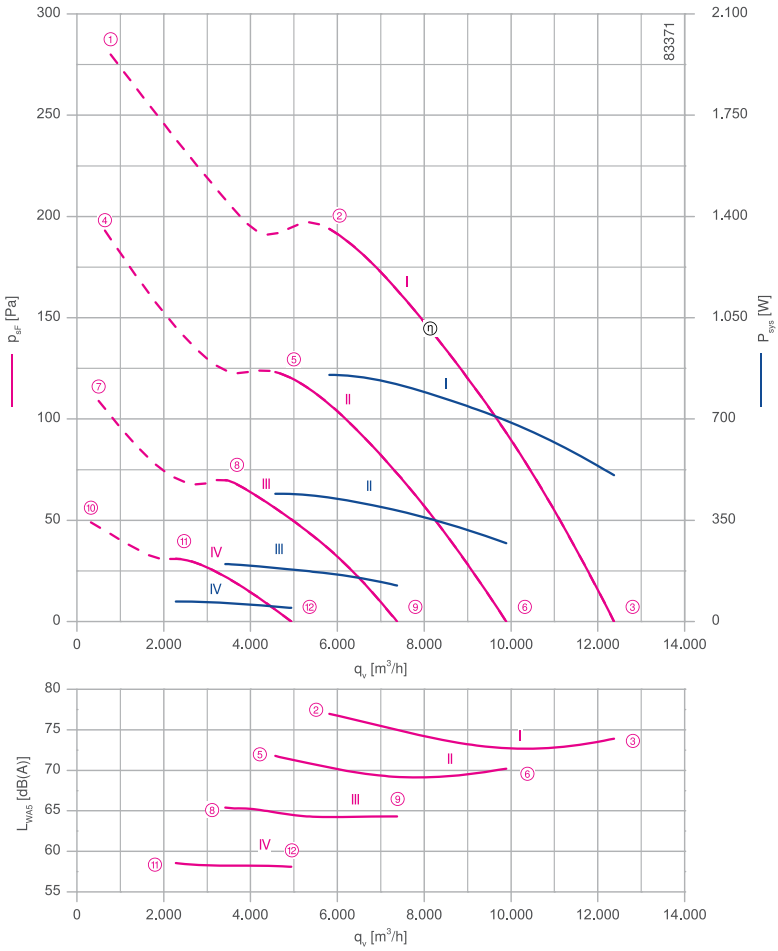

Measured in full bell mouth without guard grille in installation type A according to ISO 5801

Connection diagram Page 530
1360-403

System components Page 430

Dimensions mm

Airflow direction A

Design W - axial bolted, mounting for short bell mouth, guard grille suction side

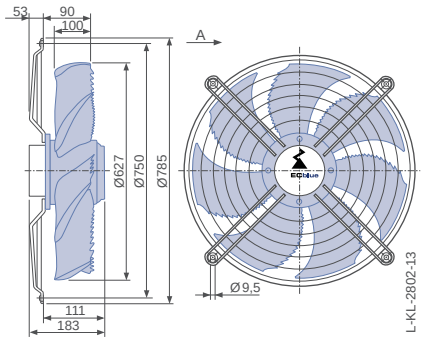

Design Q - square full bell mouth, guard grille suction side

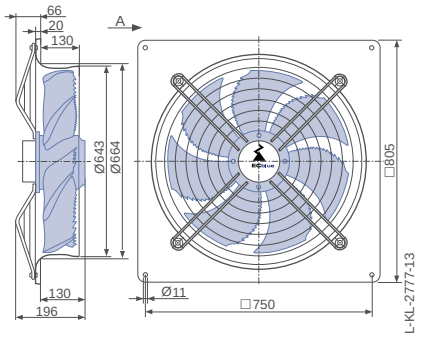

Airflow direction V

Design K - axial bolted, mounted for short bell mouth, guard grille pressure side

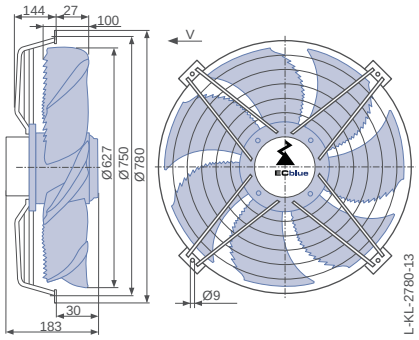

Performance data

Type	Characteristic curve	Speed n min⁻¹	Operating point	Current I A	Input power P_{sys} W	Suction side sound power level L_{WA5} dB(A)
FN063-ZI_.DG._7P2	I	1050	①	4.20	940	
			②	3.70	860	77
			③	2.20	500	74
	II	840	④	2.40	540	
			⑤	2.00	440	72
			⑥	1.25	270	70
	III	630	⑦	1.10	240	
			⑧	0.90	200	66
			⑨	0.62	120	64
	IV	420	⑩	0.44	80	
			⑪	0.39	70	59
			⑫	0.42	48	58

Current values determined at 230V

Fan ordering information

Airflow direction A			Airflow direction V	
Design	W (guard grille suction side)	Q (guard grille suction side)	K (guard grille pressure side)	Q (guard grille pressure side)
		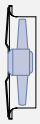		
Type	**FN063-ZIW.DG.A7P2**	**FN063-ZIQ.DG.A7P2**	**FN063-ZIK.DG.V7P2**	**FN063-ZIQ.DG.V7P2**
Article no.	**152776**	**152782**	**152800**	**152806**
Weight kg	15.40	25.60	17.30	25.20

Control technology

Control modules	Add-on modules	Operating terminal
		
Page 452	Page 463	Page 472

Design Q - square full bell mouth, guard grille pressure side

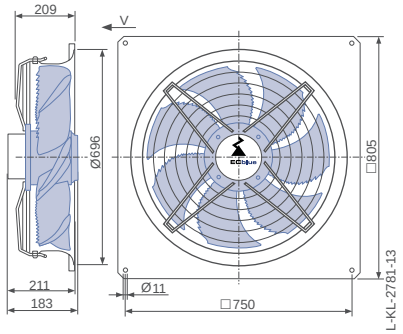

FE2owlet-ECblue

for three phase alternating current, 200-240 V

FN063



Description

Motor technology: EC
Rated voltage U_N: **3~ 200-240 V***
Rated frequency f_N: **50/60 Hz***
Input power P_{sys}: **1.25 kW***
Rated current I_N: **3.80- 3.10 A***
Rated speed n_N: **1200 min^{-1}***
Thermal class: **THCL155***
Min. permitted ambient temperature $t_{R(min)}$: -35 °C
Max. permitted ambient temperature $t_{R(max)}$: 60 °C
Electrical connection: integrated Controller
Number of blades: 7
Protection class: IP54
Motor protection: Integrated active temperature management
Blades: High Performance Composite Material, uncoated, black
Rotor: Steel, 2 coat paint, ultramarine blue
Conformity: ErP 2015, CE, UL
ErP-data
Efficiency η_{statA}: 49.1 %
Efficiency: N_{actual} = 55.1 / N_{target} = 40**
EC controller integrated
* Rated data
**ErP 2015

Characteristic curve

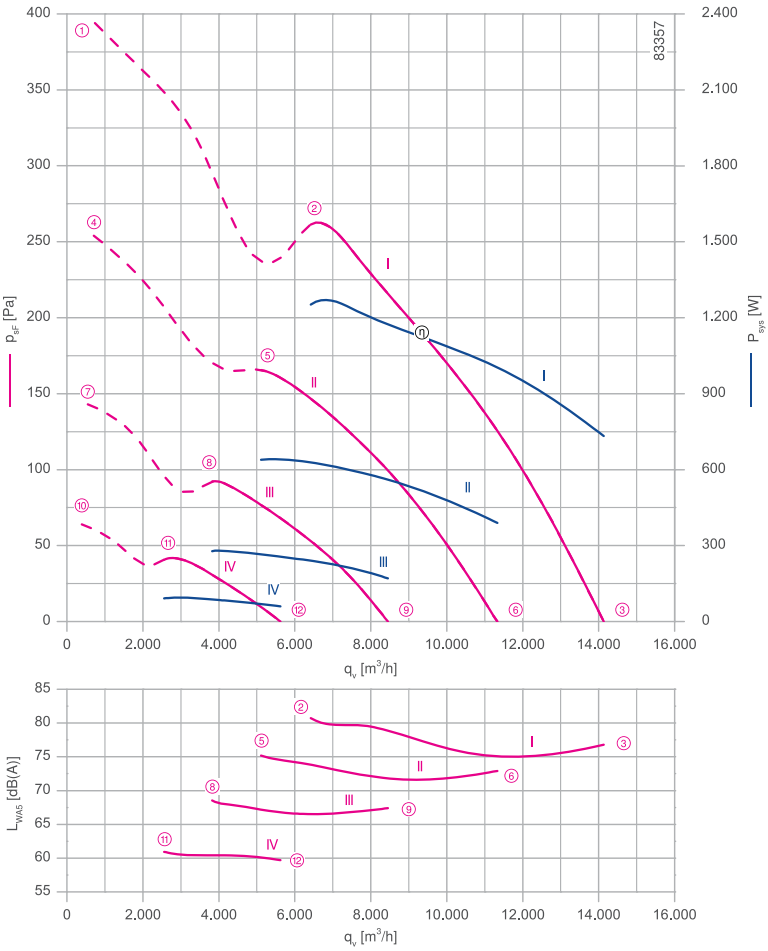

Measured in full bell mouth without guard grille in installation type A according to ISO 5801

Connection diagram Page 530
1360-403

System components Page 430

Dimensions mm

Airflow direction A

Design W - axial bolted, mounting for short bell mouth, guard grille suction side

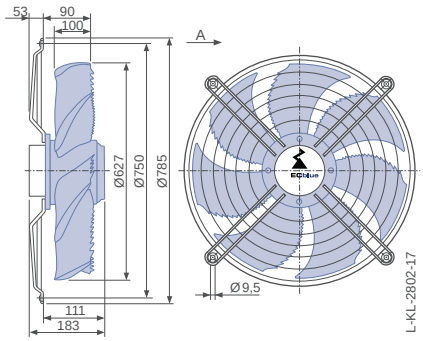

Design Q - square full bell mouth, guard grille suction side

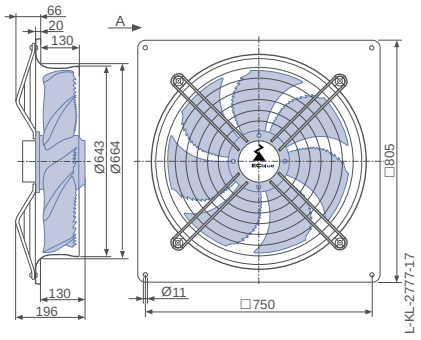

Airflow direction V

Design K - axial bolted, mounted for short bell mouth, guard grille pressure side

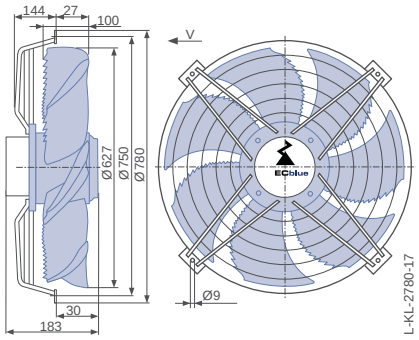

Performance data

Type	Characteristic curve	Speed n min⁻¹	Operating point	Current I A	Input power P_{sys} W	Suction side sound power level L_{WA5} dB(A)
FN063-ZI_.DG._7P2	I	1200	①	4.00	1500	
			②	3.30	1250	81
			③	1.95	740	77
	II	960	④	2.10	780	
			⑤	1.70	640	75
			⑥	1.05	390	73
	III	720	⑦	0.94	340	
			⑧	0.78	280	69
			⑨	0.54	170	67
	IV	480	⑩	0.40	110	
			⑪	0.37	90	61
			⑫	0.29	60	60

Current values determined at 230V

Fan ordering information

Airflow direction A			Airflow direction V	
Design	W (guard grille suction side)	Q (guard grille suction side)	K (guard grille pressure side)	Q (guard grille pressure side)
		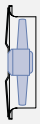		
Type	**FN063-ZIW.DG.A7P2**	**FN063-ZIQ.DG.A7P2**	**FN063-ZIK.DG.V7P2**	**FN063-ZIQ.DG.V7P2**
Article no.	**152774**	**152780**	**152798**	**152804**
Weight kg	15.40	25.60	17.30	25.30

Control technology

Control modules	Add-on modules	Operating terminal
		
Page 452	Page 463	Page 472

Design Q - square full bell mouth, guard grille pressure side

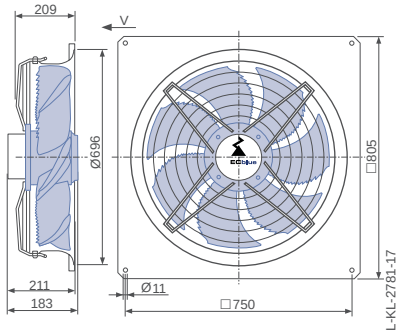

FE2owlet-EC blue

for three phase alternating current, 200-240 V

FN063



Description

Motor technology: EC
Rated voltage U_N: **3~ 200-240 V***
Rated frequency f_N: **50/60 Hz***
Input power P_{sys}: **3.20 kW***
Rated current I_N: **9.70- 8.10 A***
Rated speed n_N: **1500 min^{-1}***
Thermal class: **THCL155***
Min. permitted ambient temperature $t_{R(min)}$: -35 °C
Max. permitted ambient temperature $t_{R(max)}$: 50 °C
Electrical connection: integrated Controller
Number of blades: 7
Protection class: IP54
Motor protection: Integrated active temperature management
Blades: Aluminium, uncoated
Rotor: Steel, 2 coat paint, ultramarine blue
Conformity: ErP 2015, CE, UL
ErP-data
Efficiency η_{statA}: 41.9 %
Efficiency: N_{actual} = 45.0 / N_{target} = 40**
EC controller integrated
* Rated data
**ErP 2015

Characteristic curve

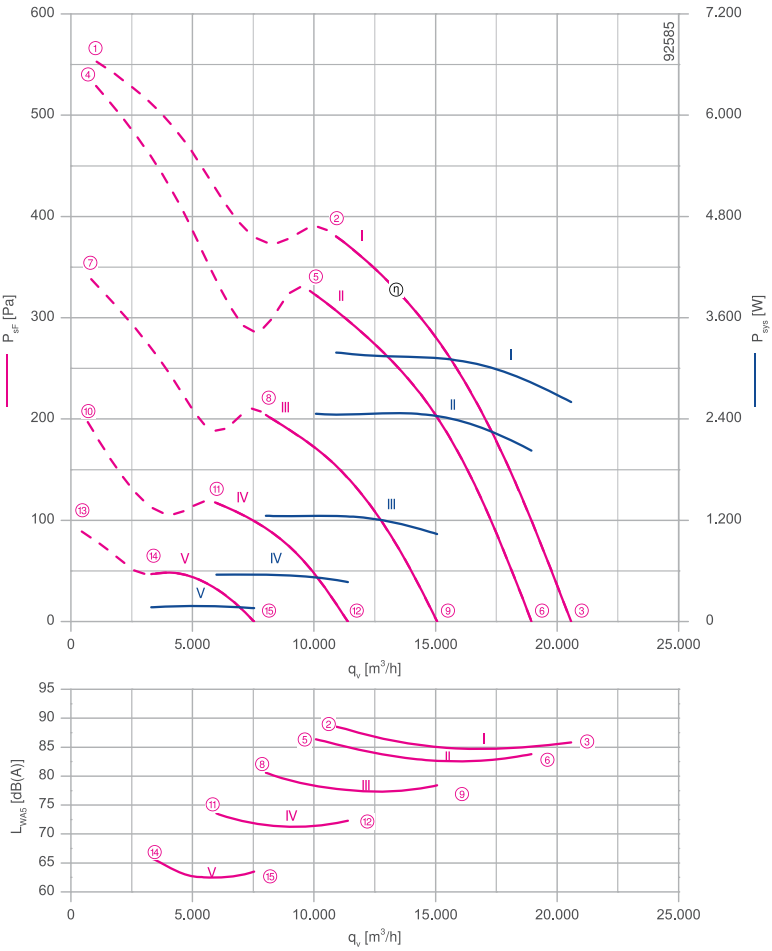

Measured in full bell mouth without guard grille in installation type A according to ISO 5801

Connection diagram Page 530
1360-403

System components Page 430

Dimensions mm

Airflow direction A

Design Q - square full bell mouth, without guard grille

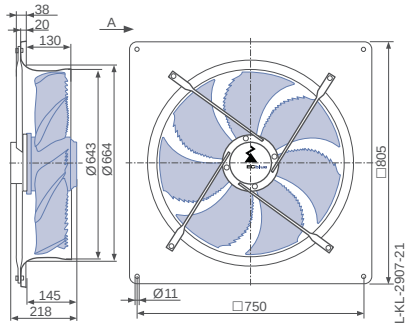

Design Q - square full bell mouth, guard grille suction side

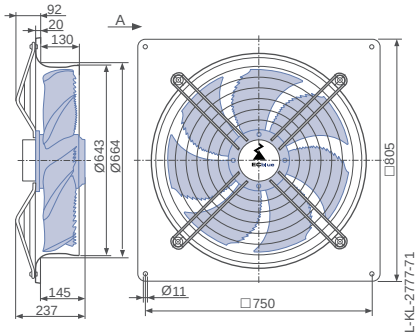

Airflow direction V

Design Q - square full bell mouth, guard grille pressure side

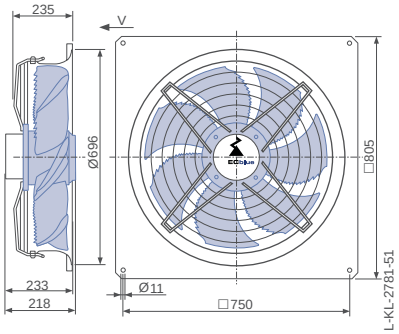

Performance data

Type	Characteristic curve	Speed n min⁻¹	Operating point	Current I A	Input power P_{sys} W	Suction side sound power level L_{WA5} dB(A)	Maximum ambient temperature t_R °C
FN063-ZI_.GG._7P3	I	1500	①	8.40	3200		50
			②	8.40	3200	89	
			③	6.80	2600	86	
	II	1380	④	8.00	3100		60
			⑤	6.60	2500	86	
			⑥	5.40	2000	84	
	III	1100	⑦	4.00	1550		
			⑧	3.30	1250	81	
			⑨	2.80	1050	78	
	IV	830	⑩	1.85	700		
			⑪	1.50	560	74	
			⑫	1.30	460	72	
	V	550	⑬	0.70	230		
			⑭	0.60	180	63	
			⑮	0.54	160	64	

Current values determined at 230V

Fan ordering information

Airflow direction A			Airflow direction V
Design	Q (without guard grille)	Q (guard grille suction side)	Q (guard grille pressure side)
	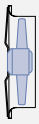	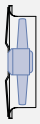	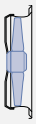
Type	**FN063-ZIQ.GG.A7P3**	**FN063-ZIQ.GG.A7P3**	**FN063-ZIQ.GG.V7P3**
Article no.	**159529**	**159824**	**159523**
Weight kg	37.70	40.00	40.40

Control technology

Control modules	Add-on modules	Operating terminal
		
Page 452	Page 463	Page 472

FE2owlet-EC blue

for three phase alternating current, 200-240 V

FN063



Description

Motor technology: EC
Rated voltage U: **3~ 200-240 V***
Rated frequency f: **50/60 Hz***
Motor input power P_{sys}: **3.70 kW***
Rated current I: **11.20- 9.40 A***
Rated speed n_{max}: **1600 min^{-1}***
Thermal class: **THCL155***
Min. permitted conveyor temperature $t_{R(min)}$: -35 °C
Max. permitted conveyor temperature $t_{R(max)}$: 55 °C
Electrical connection: integrated Controller
Number of blades: 7
Protection class: IP54
Motor protection: Integrated active temperature management
Blades: Aluminium, uncoated
Rotor: Steel, 2 coat paint, Ultramarine blue
Conformity: ErP 2015, CE, UL
ErP Data
Efficiency η_{statA}: 43.3 %
Efficiency: N_{actual} = 46.1 / N_{target} = 40**
EC controller integrated
* Rated data
**ErP 2015

Characteristic curve

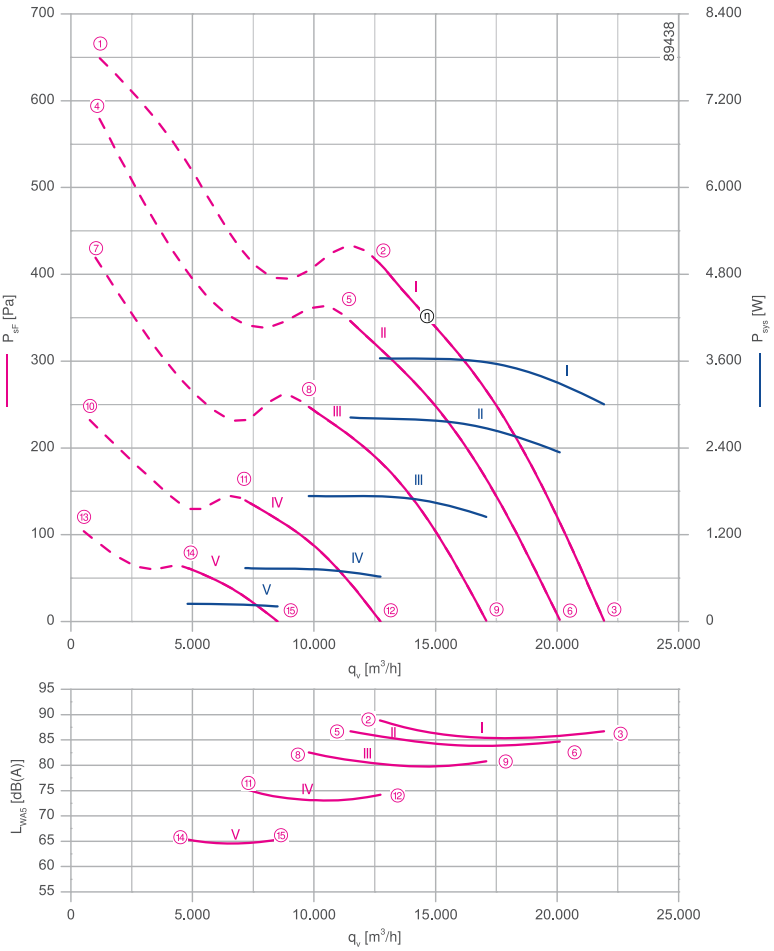

Measured in full bell mouth without guard grille in installation type A according to ISO 5801

Connection diagram Page 530
1360-403

System components Page 430

Dimensions mm

Airflow direction V

Design Q - square full bell mouth, without guard grille

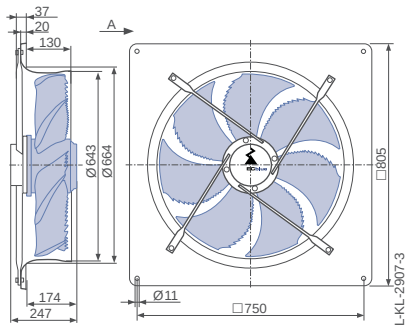

Design Q - square full bell mouth, guard grille suction side

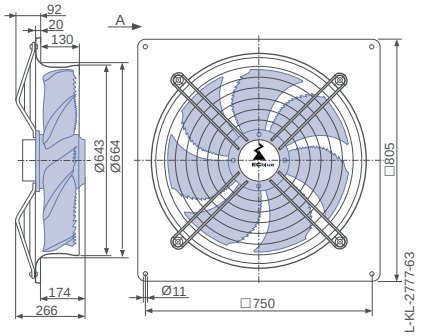

Airflow direction A

Design Q - square full bell mouth, guard grille pressure side

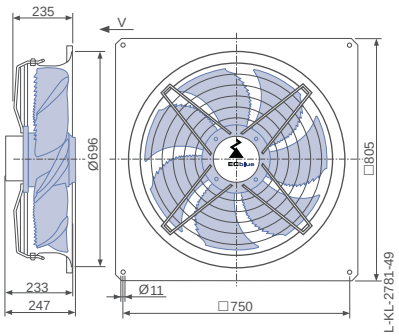

Performance data

Type	Characteristic curve	Speed n min⁻¹	Operating point	Current I A	Input power P_{sys} W	Suction side sound power level L_{WA5} dB(A)	Maximum ambient temperature t_R °C
FN063-ZI_.GL._7P3	I	1600	①	11.00	4200		55
			②	9.80	3600	89	
			③	8.00	3000	87	
	II	1470	④	9.40	3500		60
			⑤	7.60	2800	87	
			⑥	6.20	2300	85	
	III	1250	⑦	5.80	2200		
			⑧	4.60	1750	83	
			⑨	3.90	1450	81	
	IV	930	⑩	2.50	920		
			⑪	2.00	740	75	
			⑫	1.70	620	74	
	V	620	⑬	0.86	300		
			⑭	0.74	240	65	
			⑮	0.66	210	65	

Current values determined at 230V

Fan ordering information

Airflow direction A			Airflow direction V
Design	Q (without guard grille)	Q (guard grille suction side)	Q (guard grille pressure side)
	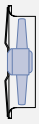	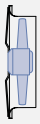	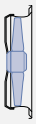
Type	**FN063-ZIQ.GL.A7P3**	**FN063-ZIQ.GL.A7P3**	**FN063-ZIQ.GL.V7P3**
Article no.	**155687**	**155689**	**154897**
Weight kg	41.90	44.20	44.60

Control technology

Control modules	Add-on modules	Operating terminal
		
Page 452	Page 463	Page 472

FE2owlet-ECblue

for three phase alternating current, 380-480 V

FN063



Description

Motor technology: EC
Rated voltage U_N: **3~ 380-480 V***
Rated frequency f_N: **50/60 Hz***
Input power P_{sys}: **1.25 kW***
Rated current I_N: **2.00- 1.60 A***
Rated speed n_N: **1200 min^{-1}***
Thermal class: **THCL155***
Min. permitted ambient temperature $t_{R(min)}$: -35 °C
Max. permitted ambient temperature $t_{R(max)}$: 60 °C
Electrical connection: integrated Controller
Number of blades: 7
Protection class: IP54
Motor protection: Integrated active temperature management
Blades: High Performance Composite Material, uncoated, black
Rotor: Steel, 2 coat paint, ultramarine blue
Conformity: ErP 2015, CE, UL
ErP-data
Efficiency η_{statA}: 48.5 %
Efficiency: N_{actual} = 54.6 / N_{target} = 40**
EC controller integrated
* Rated data
**ErP 2015

Characteristic curve

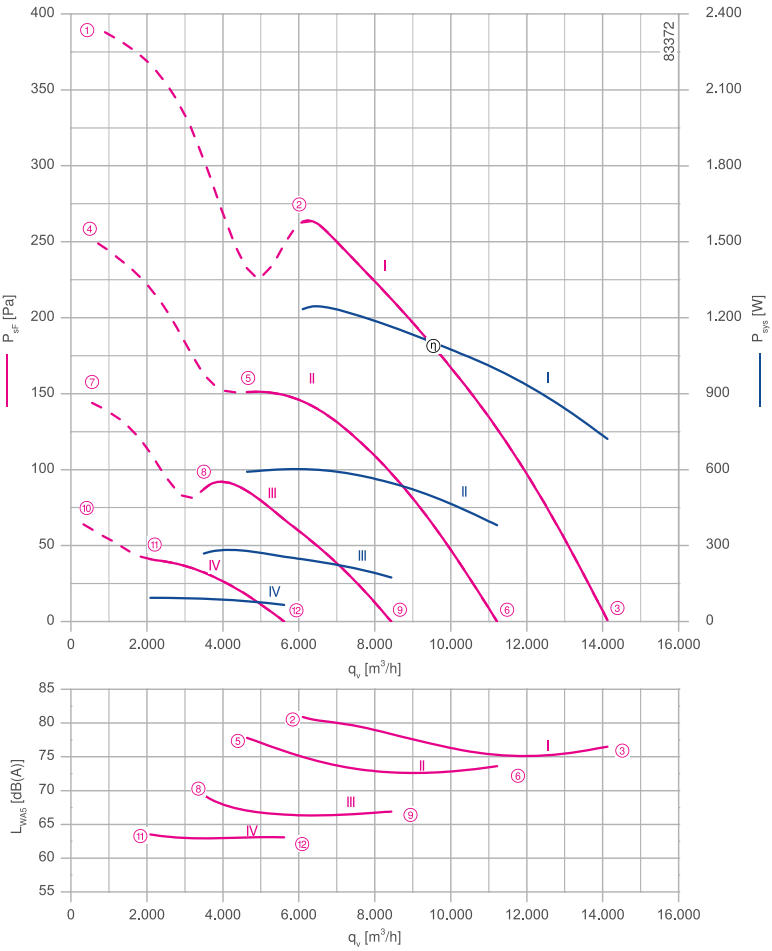

Measured in full bell mouth without guard grille in installation type A according to ISO 5801

Connection diagram Page 530
1360-403

System components Page 430

Dimensions mm

Airflow direction A

Design W - axial bolted, mounting for short bell mouth, guard grille suction side

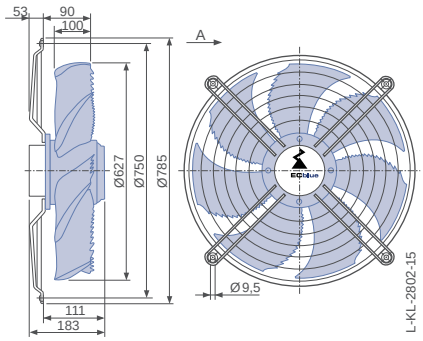

Design Q - square full bell mouth, guard grille suction side

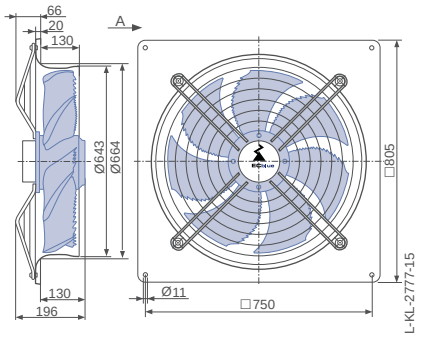

Airflow direction V

Design K - axial bolted, mounted for short bell mouth, guard grille pressure side

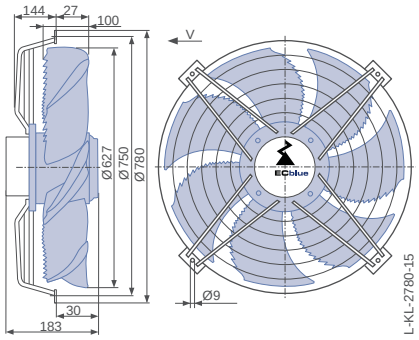

Performance data

Type	Characteristic curve	Speed n min⁻¹	Operating point	Current I A	Input power P_{sys} W	Suction side sound power level L_{WA5} dB(A)
FN063-ZI_.DG._7P2	I	1200	①	2.30	1500	
			②	1.90	1250	81
			③	1.20	720	77
	II	960	④	1.25	760	
			⑤	1.05	580	78
			⑥	0.74	380	74
	III	720	⑦	0.70	340	
			⑧	0.60	270	69
			⑨	0.44	170	67
	IV	480	⑩	0.33	110	
			⑪	0.29	95	63
			⑫	0.25	65	63

Current values determined at 400V

Fan ordering information

Airflow direction			Airflow direction	
Design	W (guard grille suction side)	Q (guard grille suction side)	K (guard grille pressure side)	Q (guard grille pressure side)
		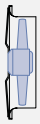		
Type	**FN063-ZIW.DG.A7P2**	**FN063-ZIQ.DG.A7P2**	**FN063-ZIK.DG.V7P2**	**FN063-ZIQ.DG.V7P2**
Article no.	**152772**	**152778**	**152796**	**152802**
Weight kg	15.40	25.60	17.30	25.20

Control technology

Control modules	Add-on modules	Operating terminal
		
Page 452	Page 463	Page 472

Design Q - square full bell mouth, guard grille pressure side

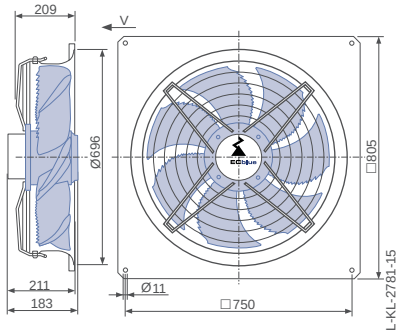

FE2owlet-ECblue

for three phase alternating current, 380-480 V

FN063



Description

Motor technology: EC
Rated voltage U_N: **3~ 380-480 V***
Rated frequency f_N: **50/60 Hz***
Input power P_{sys}: **1.85 kW***
Rated current I_N: **3.10- 2.50 A***
Rated speed n_N: **1270 min^{-1}***
Thermal class: **THCL155***
Min. permitted ambient temperature $t_{R(min)}$: -35 °C
Max. permitted ambient temperature $t_{R(max)}$: 65 °C
Electrical connection: integrated Controller
Number of blades: 7
Protection class: IP54
Motor protection: Integrated active temperature management
Blades: Aluminium, uncoated
Rotor: Steel, 2 coat paint, ultramarine blue
Conformity: ErP 2015, CE, UL
ErP-data
Efficiency η_{statA}: 43.0 %
Efficiency: N_{actual} = 47.6 / N_{target} = 40**
EC controller integrated
* Rated data
**ErP 2015

Characteristic curve

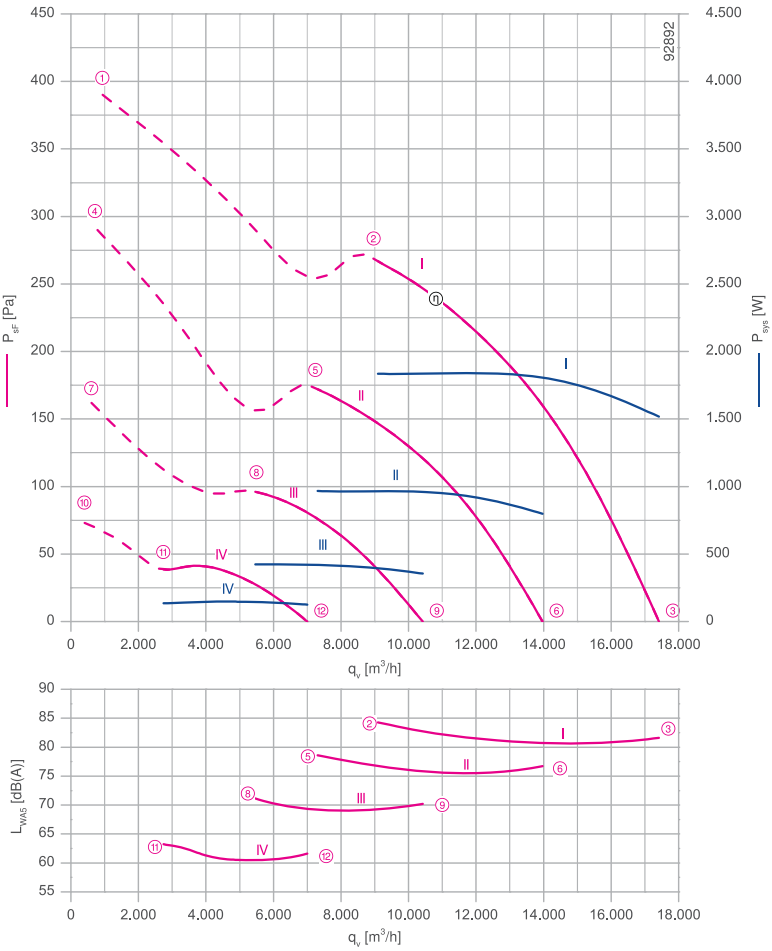

Measured in full bell mouth without guard grille in installation type A according to ISO 5801

Connection diagram Page 530
1360-403

System components Page 430

Dimensions mm

Airflow direction A

Design Q - square full bell mouth, without guard grille

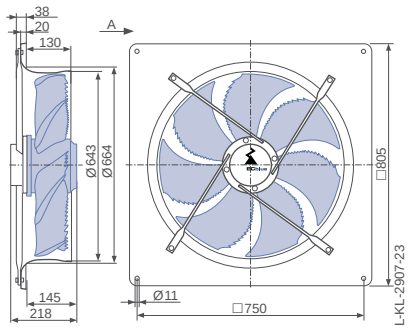

Design Q - square full bell mouth, guard grille suction side

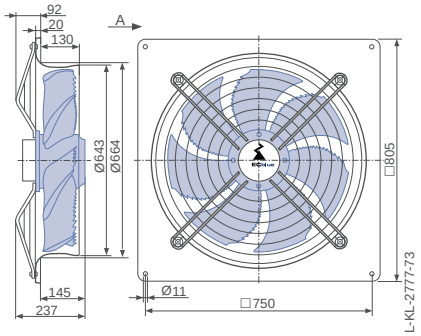

Airflow direction V

Design Q - square full bell mouth, guard grille pressure side

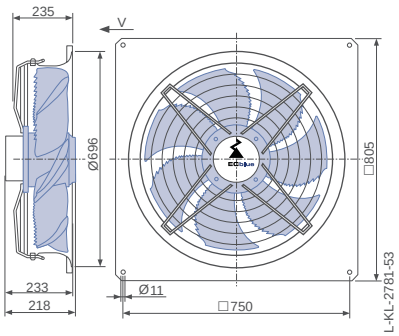

Performance data

Type	Characteristic curve	Speed n min⁻¹	Operating point	Current I A	Input power P_{sys} W	Suction side sound power level L_{WA5} dB(A)
FN063-ZI_.GG._7P3	I	1270	①	3.00	1900	
			②	3.00	1850	84
			③	2.50	1500	82
	II	1020	④	2.00	1200	
			⑤	1.70	960	79
			⑥	1.45	800	77
	III	760	⑦	1.00	520	
			⑧	0.84	420	71
			⑨	0.72	360	70
	IV	510	⑩	0.42	180	
			⑪	0.36	150	61
			⑫	0.32	130	62

Current values determined at 400V

Fan ordering information

Airflow direction A | Airflow direction V

Design	Q (without guard grille)	Q (guard grille suction side)	Q (guard grille pressure side)
		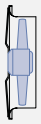	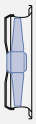
Type	**FN063-ZIQ.GG.A7P3**	**FN063-ZIQ.GG.A7P3**	**FN063-ZIQ.GG.V7P3**
Article no.	**154982**	**154986**	**154970**
Weight kg	37.70	40.00	40.40

Control technology

Control modules	Add-on modules	Operating terminal
		
Page 452	Page 463	Page 472

FE2owlet-ECblue

for three phase alternating current, 380-480 V

FN063



Description

Motor technology: EC
Rated voltage U_N: **3~ 380-480 V***
Rated frequency f_N: **50/60 Hz***
Input power P_{sys}: **3.70 kW***
Rated current I_N: **5.90- 4.70 A***
Rated speed n_N: **1600 min^{-1}***
Thermal class: **THCL155***
Min. permitted ambient temperature $t_{R(min)}$: -35 °C
Max. permitted ambient temperature $t_{R(max)}$: 55 °C
Electrical connection: integrated Controller
Number of blades: 7
Protection class: IP54
Motor protection: Integrated active temperature management
Blades: Aluminium, uncoated
Rotor: Steel, 2 coat paint, ultramarine blue
Conformity: ErP 2015, CE, UL
ErP-data
Efficiency η_{statA}: 41.7 %
Efficiency: N_{actual} = 44.5 / N_{target} = 40**
EC controller integrated
* Rated data
**ErP 2015

Characteristic curve

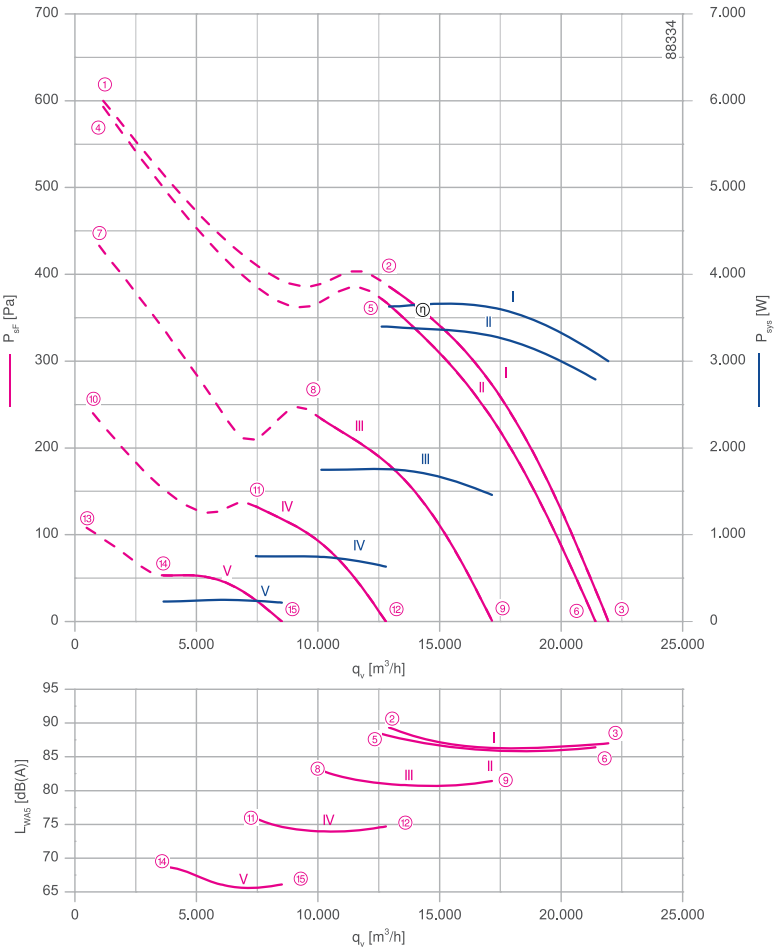

Measured in full bell mouth without guard grille in installation type A according to ISO 5801

Connection diagram Page 530
1360-403

System components Page 430

Dimensions mm

Airflow direction A

Design Q - square full bell mouth, without guard grille

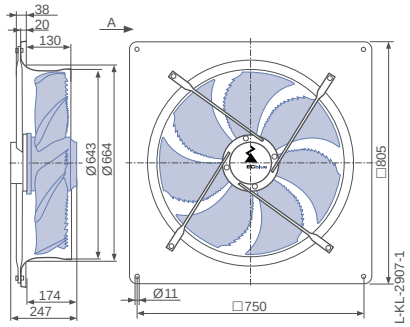

Design Q - square full bell mouth, guard grille suction side

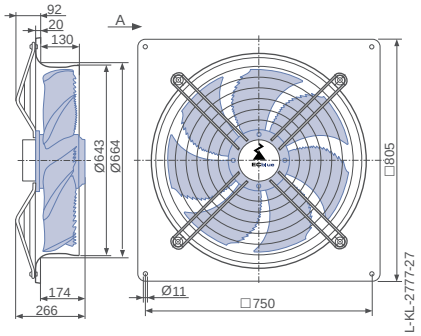

Airflow direction V

Design Q - square full bell mouth, guard grille pressure side

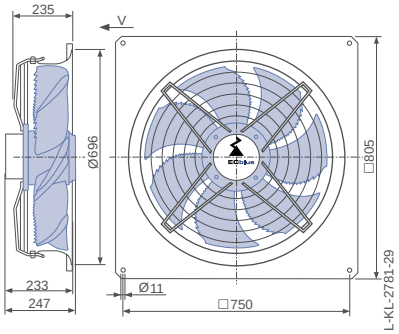

Performance data

Type	Characteristic curve	Speed n min⁻¹	Operating point	Current I A	Input power P_{sys} W	Suction side sound power level L_{WA5} dB(A)	Maximum ambient temperature t_R °C
FN063-ZI_.GL._7P3	I	1600	①	5.40	3500		55
			②	5.60	3600	91	
			③	4.60	3000	87	
	II	1560	④	5.40	3500		60
			⑤	5.20	3400	90	
			⑥	4.20	2800	86	
	III	1250	⑦	3.40	2200		
			⑧	2.70	1750	85	
			⑨	2.30	1450	81	
	IV	930	⑩	1.50	920		
			⑪	1.25	740	77	
			⑫	1.10	640	75	
	V	620	⑬	0.68	310		
			⑭	0.60	250	67	
			⑮	0.54	220	66	

Current values determined at 400V

Fan ordering information

Airflow direction A			Airflow direction V
Design	Q (without guard grille)	Q (guard grille suction side)	Q (guard grille pressure side)
	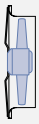	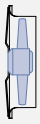	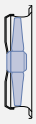
Type	**FN063-ZIQ.GL.A7P3**	**FN063-ZIQ.GL.A7P3**	**FN063-ZIQ.GL.V7P3**
Article no.	**154984**	**154988**	**154972**
Weight kg	41.90	44.20	44.60

Control technology

Control modules	Add-on modules	Operating terminal
		
Page 452	Page 463	Page 472

FE2owlet-EC blue

for single phase alternating current, 200-277 V

FN071



Description

Motor technology: EC
Rated voltage U_N: **1~ 200-277 V***
Rated frequency f_N: **50/60 Hz***
Input power P_{sys}: **280 W***
Rated current I_N: **1.40- 1.00 A***
Rated speed n_N: **620 min^{-1}***
Thermal class: **THCL155***
Min. permitted ambient temperature $t_{R(min)}$: -35 °C
Max. permitted ambient temperature $t_{R(max)}$: 50 °C
Electrical connection: integrated Controller
Number of blades: 7
Protection class: IP54
Motor protection: Integrated active temperature management
Blades: High Performance Composite Material, uncoated, black
Rotor: Steel, 2 coat paint, ultramarine blue
Conformity: ErP 2015, CE
ErP-data
Efficiency η_{statA}: 38.7 %
Efficiency: N_{actual} = 48.7 / N_{target} = 40**
EC controller integrated
* Rated data
**ErP 2015

Characteristic curve

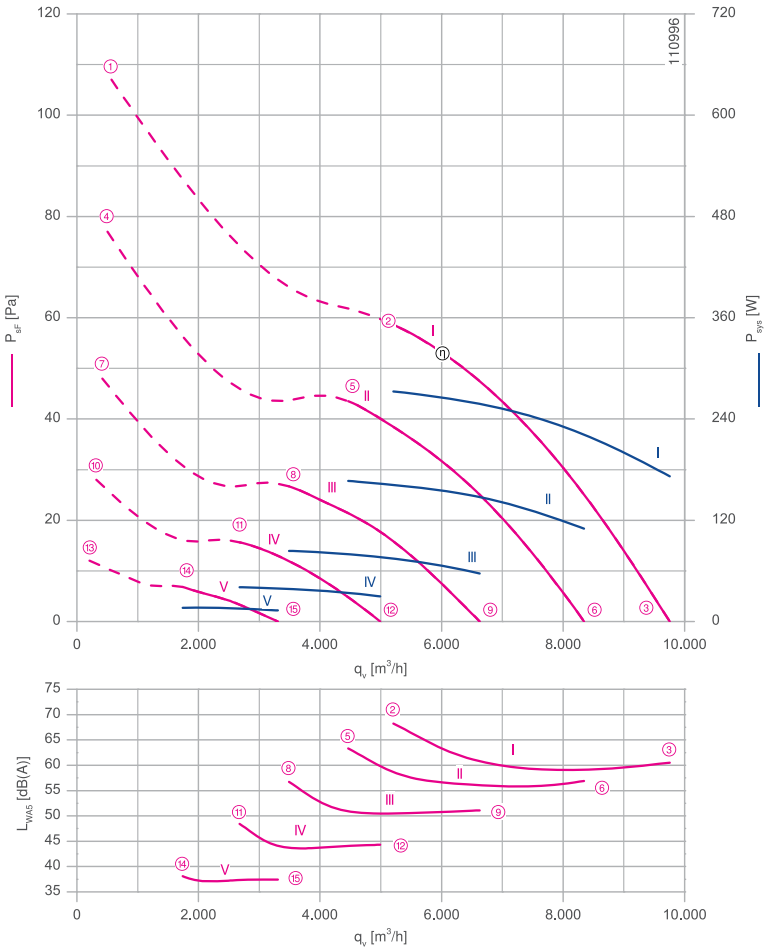

Measured in full bell mouth without guard grille in installation type A according to ISO 5801.

Connection diagram Page 529
1360-384

System components Page 430

Dimensions mm

Airflow direction A

Design W - axial bolted, mounting for short bell mouth, guard grille suction side

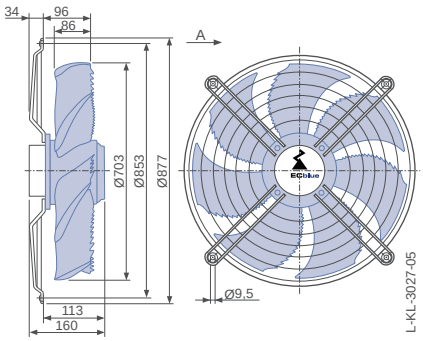

Design Q - square full bell mouth, guard grille suction side

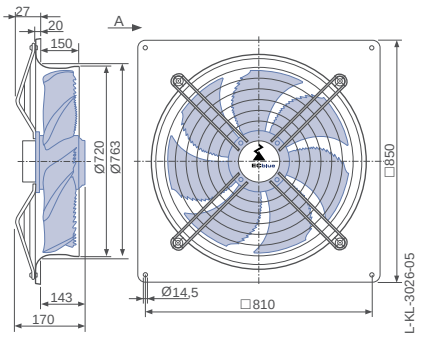

Airflow direction V

Design K - axial bolted, mounted for short bell mouth, guard grille pressure side

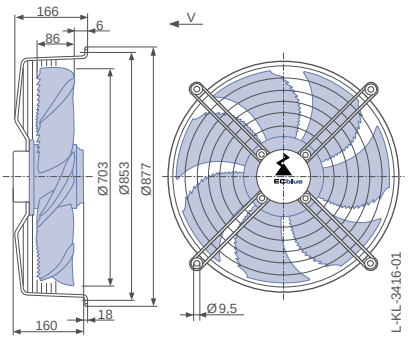

Performance data

Type	Characteristic curve	Speed n min⁻¹	Operating point	Current I A	Input power P_{sys} W	Suction side sound power level L_{WA5} dB(A)	Maximum ambient temperature t_R °C
FN071-6I_.BD._7P3	I	620	①	1.80	420		50
			②	1.20	270	69	
			③	0.76	170	61	
	II	530	④	1.05	240		60
			⑤	0.74	170	64	
			⑥	0.50	110	57	
	III	420	⑦	0.52	110		
			⑧	0.39	85	57	
			⑨	0.28	55	51	
	IV	320	⑩	0.27	55		
			⑪	0.23	40	49	
			⑫	0.19	30	44	
	V	210	⑬	0.16	20		
			⑭	0.15	16	38	
			⑮	0.14	13	37	

Current values determined at 230V

Fan ordering information

Airflow direction A			Airflow direction V	
Design	W (guard grille suction side)	Q (guard grille suction side)	K (guard grille pressure side)	Q (guard grille pressure side)
		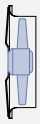		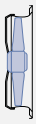
Type	**FN071-6IW.BD.A7P3**	**FN071-6IQ.BD.A7P3**	**FN071-6IK.BD.V7P3**	**FN071-6IQ.BD.V7P3**
Article no.	**165275**	**168076**	**165278**	**165279**
Weight kg	10.30	21.70	11.80	20.90

Control technology

Control modules



Page 452

Design Q - square full bell mouth, guard grille pressure side

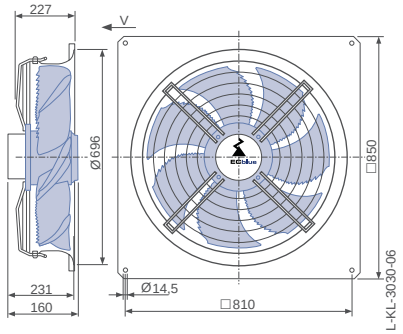

FE2owlet-EC blue

for single phase alternating current, 200-277 V

FN071



Description

Motor technology: EC
Rated voltage U_N: **1~ 200-277 V***
Rated frequency f_N: **50/60 Hz***
Input power P_{sys}: **0.66 kW***
Rated current I_N: **3.40- 2.40 A***
Rated speed n_N: **890 min^{-1}***
Thermal class: **THCL155***
Min. permitted ambient temperature $t_{R(min)}$: -35 °C
Max. permitted ambient temperature $t_{R(max)}$: 60 °C
Electrical connection: integrated Controller
Number of blades: 7
Protection class: IP54
Motor protection: Integrated active temperature management
Blades: High Performance Composite Material, uncoated, black
Rotor: Steel, 2 coat paint, ultramarine blue
Conformity: ErP 2015, CE, UL
ErP-data
Efficiency η_{statA}: 46.5 %
Efficiency: N_{actual} = 53.9 / N_{target} = 40**
EC controller integrated
* Rated data
**ErP 2015

Characteristic curve

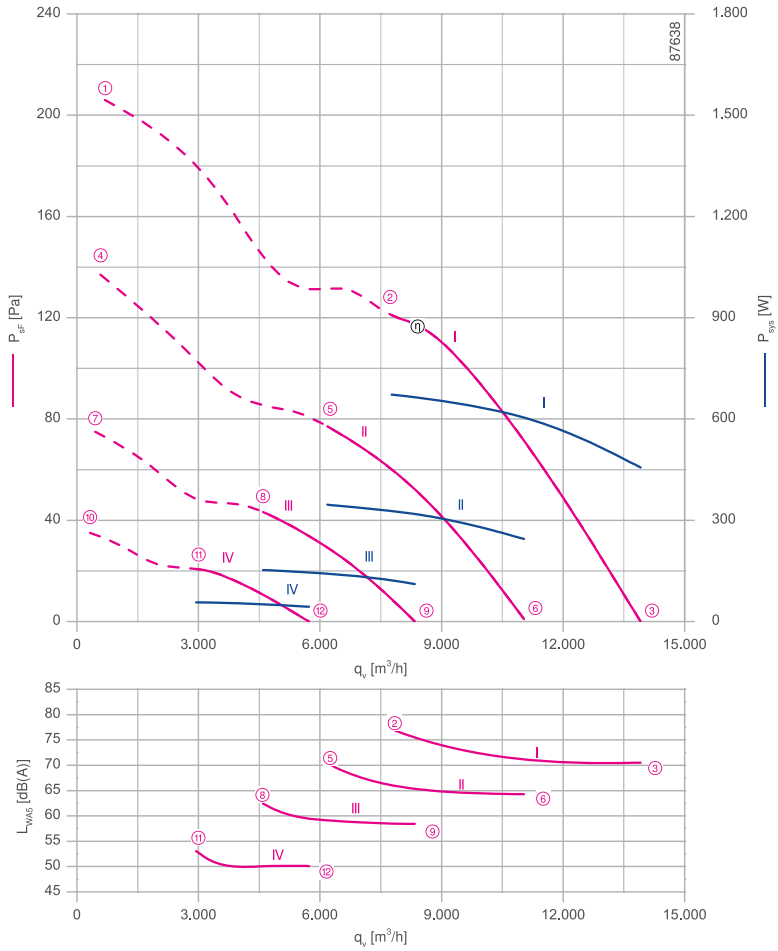

Measured in full bell mouth without guard grille in installation type A according to ISO 5801

Connection diagram Page 530
1360-403

System components Page 430

Dimensions mm

Airflow direction A

Design D - axial bolted, suspension for full bell mouth, guard grille suction side

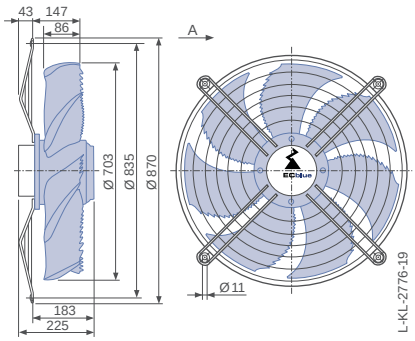

Design Q - square full bell mouth, guard grille suction side

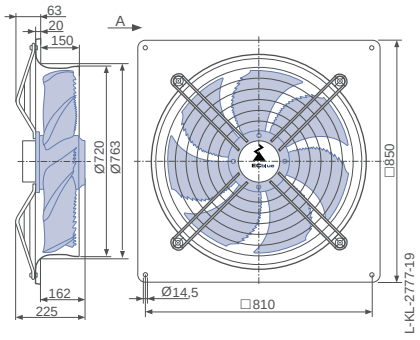

Airflow direction V

Design S - radially bolted, mounted for short bell mouth, guard grille pressure side

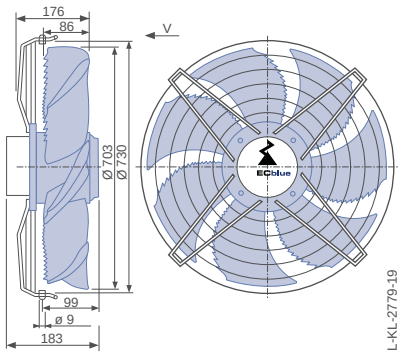

Performance data

Type	Characteristic curve	Speed n min⁻¹	Operating point	Current I A	Input power P_{sys} W	Suction side sound power level L_{WA5} dB(A)
FN071-ZI_.DG._7P3	I	890	①	3.90	880	
			②	3.10	680	78
			③	2.10	460	71
	II	710	④	2.20	480	
			⑤	1.65	350	71
			⑥	1.20	240	64
	III	530	⑦	0.98	200	
			⑧	0.74	150	63
			⑨	0.56	110	58
	IV	360	⑩	0.40	75	
			⑪	0.48	55	52
			⑫	0.44	44	50

Current values determined at 230V

Fan ordering information

Airflow direction A			Airflow direction V	
Design	D (guard grille suction side)	Q (guard grille suction side)	S (guard grille pressure side)	Q (guard grille pressure side)
		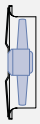		
Type	**FN071-ZID.DG.A7P3**	**FN071-ZIQ.DG.A7P3**	**FN071-ZIS.DG.V7P3**	**FN071-ZIQ.DG.V7P3**
Article no.	**154321**	**154333**	**154345**	**154357**
Weight kg	15.20	26.10	15.30	26.20

Control technology

Control modules	Add-on modules	Operating terminal
		
Page 452	Page 463	Page 472

Design Q - square full bell mouth, guard grille pressure side

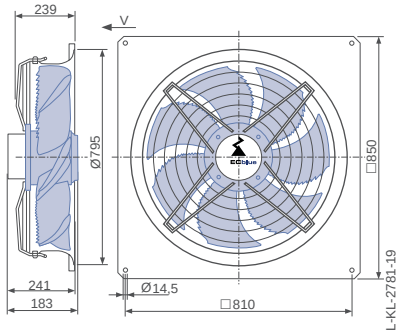

FE2owlet-EC blue

for three phase alternating current, 200-240 V

FN071



Characteristic curve

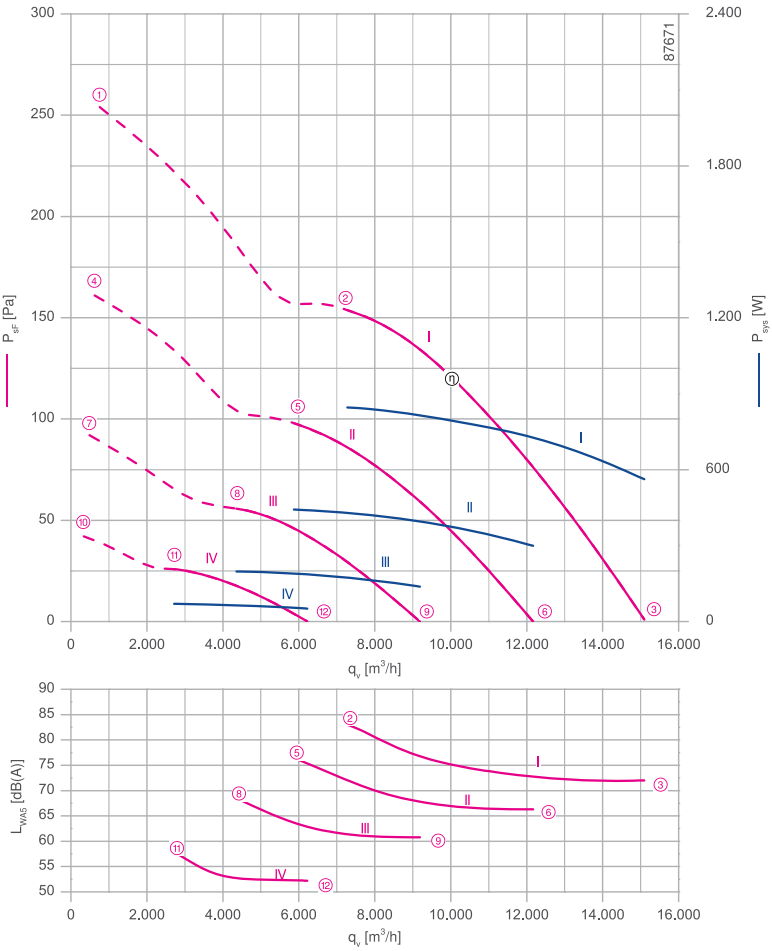

Measured in full bell mouth without guard grille in installation type A according to ISO 5801

Description

Motor technology: EC
Rated voltage U_N: **3~ 200-240 V***
Rated frequency f_N: **50/60 Hz***
Input power P_{sys}: **0.81 kW***
Rated current I_N: **2.50- 2.10 A***
Rated speed n_N: **960 min^{-1}***
Thermal class: **THCL155***
Min. permitted ambient temperature $t_{R(min)}$: -35 °C
Max. permitted ambient temperature $t_{R(max)}$: 60 °C
Electrical connection: integrated Controller
Number of blades: 7
Protection class: IP54
Motor protection: Integrated active temperature management
Blades: High Performance Composite Material, uncoated, black
Rotor: Steel, 2 coat paint, ultramarine blue
Conformity: ErP 2015, CE, UL
ErP-data
Efficiency η_{statA}: 48.3 %
Efficiency: N_{actual} = 55.3 / N_{target} = 40**
EC controller integrated
* Rated data
**ErP 2015

Connection diagram Page 530
1360-403

System components Page 430

Dimensions mm

Airflow direction A

Design D - axial bolted, suspension for full bell mouth, guard grille suction side

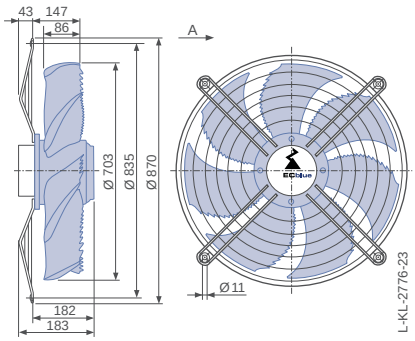

Design Q - square full bell mouth, guard grille suction side

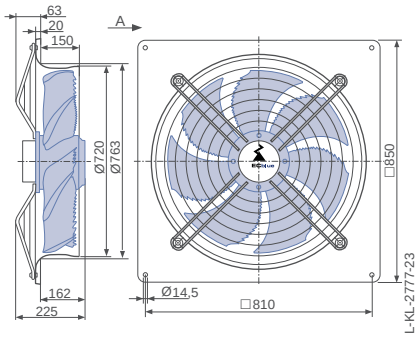

Airflow direction V

Design S - radially bolted, mounted for short bell mouth, guard grille pressure side

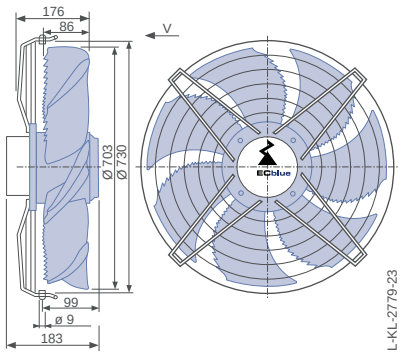

Performance data

Type	Characteristic curve	Speed n min⁻¹	Operating point	Current I A	Input power P_{sys} W	Suction side sound power level L_{WA5} dB(A)
FN071-ZI_.DG._7P3	I	960	①	3.10	1150	
			②	2.20	840	83
			③	1.50	560	72
	II	770	④	1.55	580	
			⑤	1.20	440	77
			⑥	0.84	300	66
	III	580	⑦	0.76	260	
			⑧	0.60	200	69
			⑨	0.46	140	61
	IV	390	⑩	0.36	90	
			⑪	0.30	70	57
			⑫	0.23	50	52

Current values determined at 230V

Fan ordering information

Airflow direction A			Airflow direction V	
Design	D (guard grille suction side)	Q (guard grille suction side)	S (guard grille pressure side)	Q (guard grille pressure side)
		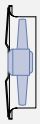		
Type	**FN071-ZID.DG.A7P3**	**FN071-ZIQ.DG.A7P3**	**FN071-ZIS.DG.V7P3**	**FN071-ZIQ.DG.V7P3**
Article no.	**154319**	**154331**	**154343**	**154355**
Weight kg	15.20	26.10	15.30	26.20

Control technology

Control modules	Add-on modules	Operating terminal
		
Page 452	Page 463	Page 472

Design Q - square full bell mouth, guard grille pressure side

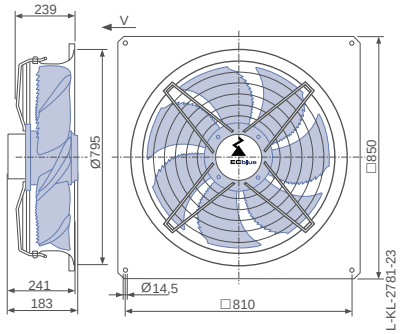

FE2owlet-EC blue

for three phase alternating current, 200-240 V

FN071



Description

Motor technology: EC
Rated voltage U_N: **3~ 200-240 V***
Rated frequency f_N: **50/60 Hz***
Input power P_{sys}: **2.90 kW***
Rated current I_N: **8.60- 7.20 A***
Rated speed n_N: **1300 min^{-1}***
Thermal class: **THCL155***
Min. permitted ambient temperature $t_{R(min)}$: -35 °C
Max. permitted ambient temperature $t_{R(max)}$: 50 °C
Electrical connection: integrated Controller
Number of blades: 7
Protection class: IP54
Motor protection: Integrated active temperature management
Blades: Aluminium, uncoated
Rotor: Steel, 2 coat paint, ultramarine blue
Conformity: ErP 2015, CE, UL
ErP-data
Efficiency η_{statA}: 43.5 %
Efficiency: N_{actual} = 47.1 / N_{target} = 40**
EC controller integrated
* Rated data
**ErP 2015

Characteristic curve

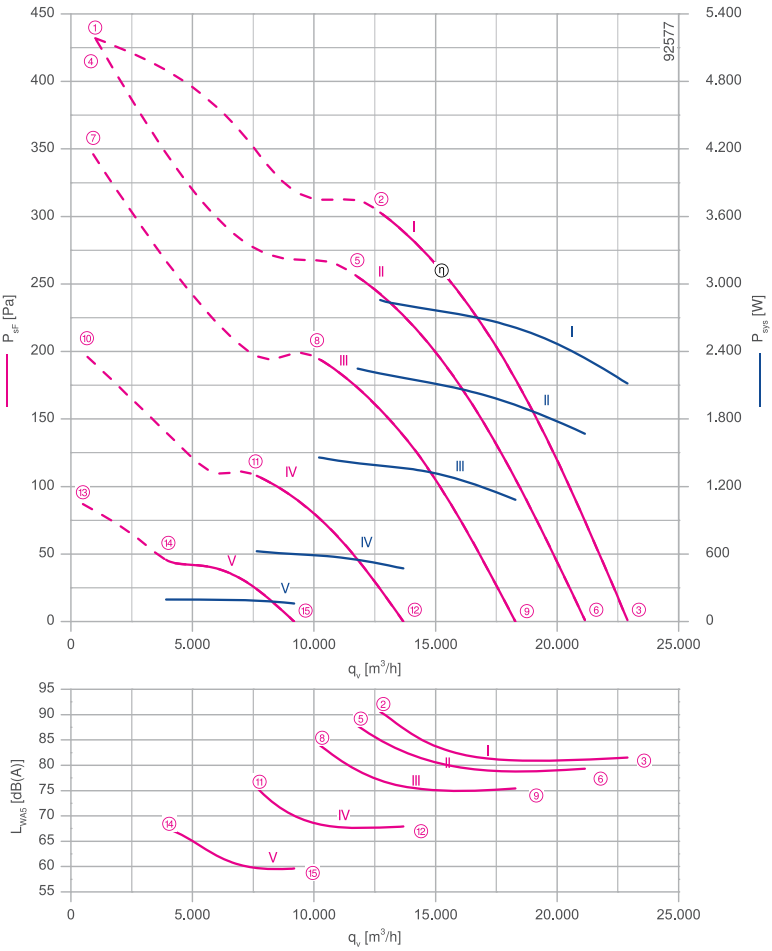

Measured in full bell mouth without guard grille in installation type A according to ISO 5801

Connection diagram Page 530
1360-403

System components Page 430

Airflow direction A

Design Q - square full bell mouth, without guard grille

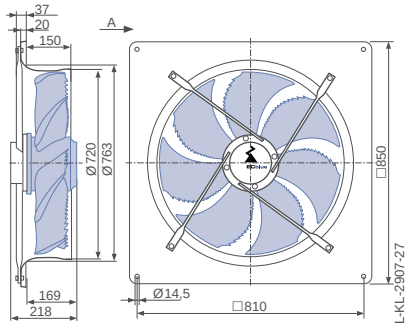

Design Q - square full bell mouth, guard grille suction side

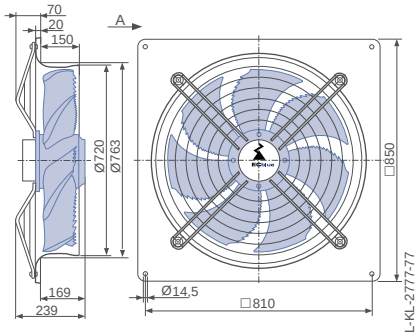

Airflow direction V

Design Q - square full bell mouth, guard grille pressure side

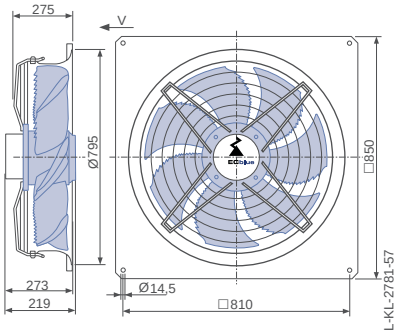

Performance data

Type	Characteristic curve	Speed n min⁻¹	Operating point	Current I A	Input power P_{sys} W	Suction side sound power level L_{WA5} dB(A)	Maximum ambient temperature t_R °C
FN071-ZI_.GG._7P4	I	1300	①	7.60	2900		50
			②	7.60	2900	91	
			③	5.60	2100	82	
	II	1200	④	7.60	2900		60
			⑤	6.00	2300	88	
			⑥	4.40	1650	79	
	III	1040	⑦	5.40	2000		
			⑧	3.90	1450	84	
			⑨	2.90	1100	75	
	IV	780	⑩	2.30	880		
			⑪	1.70	620	76	
			⑫	1.30	480	68	
	V	520	⑬	0.82	280		
			⑭	0.64	200	65	
			⑮	0.56	160	60	

Current values determined at 230V

Fan ordering information

Airflow direction A			Airflow direction V
Design	Q (without guard grille)	Q (guard grille suction side)	Q (guard grille pressure side)
		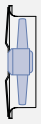	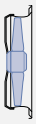
Type	**FN071-ZIQ.GG.A7P4**	**FN071-ZIQ.GG.A7P4**	**FN071-ZIQ.GG.V7P4**
Article no.	**159838**	**159840**	**159832**
Weight kg	37.50	41.00	41.00

Control technology

Control modules	Add-on modules	Operating terminal
		
Page 452	Page 463	Page 472

FE2owlet-ECblue

for three phase alternating current, 200-240 V

FN071



Description

Motor technology: EC
Rated voltage U_N: **3~ 200-240 V***
Rated frequency f_N: **50/60 Hz***
Input power P_{sys}: **3.50 kW***
Rated current I_N: **10.60- 8.80 A***
Rated speed n_N: **1400 min^{-1}***
Thermal class: **THCL155***
Min. permitted ambient temperature $t_{R(min)}$: -35 °C
Max. permitted ambient temperature $t_{R(max)}$: 55 °C
Electrical connection: integrated Controller
Number of blades: 7
Protection class: IP54
Motor protection: Integrated active temperature management
Blades: Aluminium, uncoated
Rotor: Steel, 2 coat paint, ultramarine blue
Conformity: ErP 2015, CE, UL
ErP-data
Efficiency η_{statA}: 44.4 %
Efficiency: N_{actual} = 47.5 / N_{target} = 40**
EC controller integrated
* Rated data
**ErP 2015

Characteristic curve

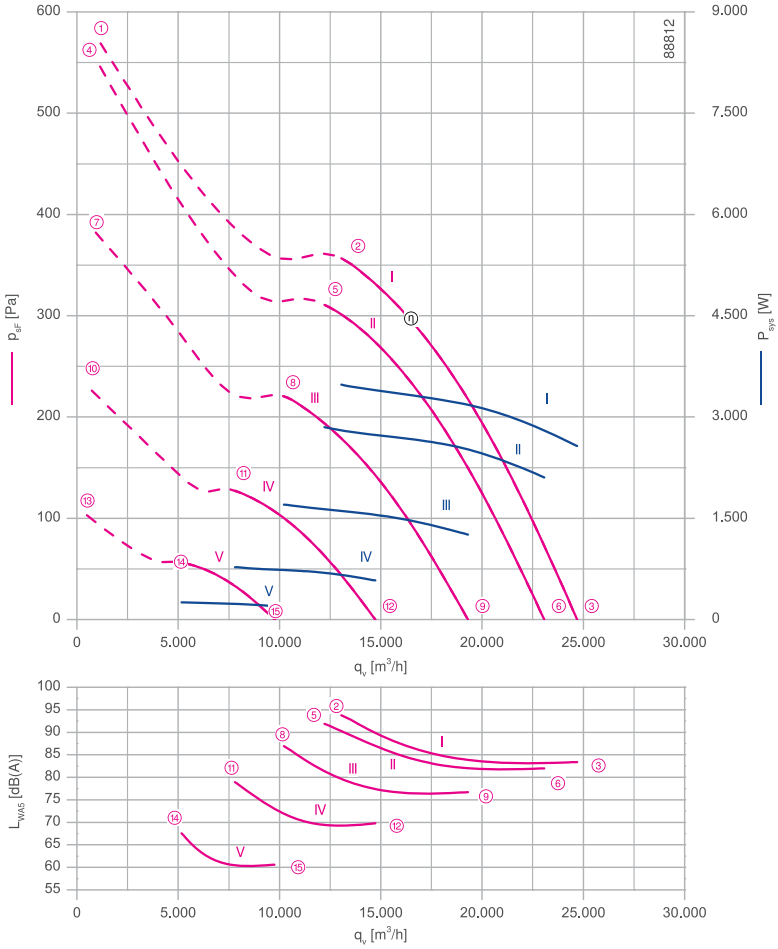

Measured in full bell mouth without guard grille in installation type A according to ISO 5801

Connection diagram Page 530
1360-403

System components Page 430

Dimensions mm

Airflow direction A

Design D - axial bolted, suspension for full bell mouth, without guard grille

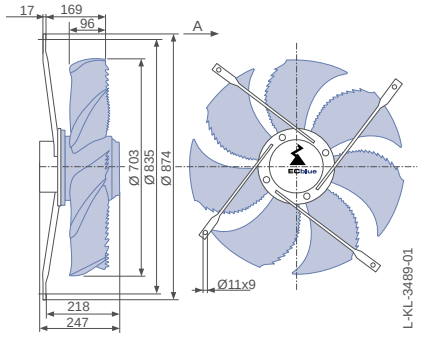

Design Q - square full bell mouth, without guard grille

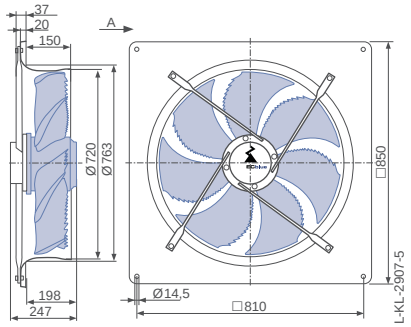

Design Q - square full bell mouth, guard grille suction side

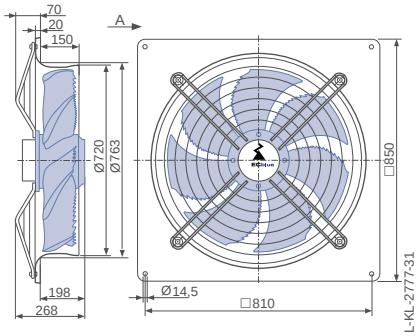

Performance data

Type	Characteristic curve	Speed n min⁻¹	Operating point	Current I A	Input power P_{sys} W	Suction side sound power level L_{WA5} dB(A)	Maximum ambient temperature t_R °C
FN071-ZI_.GL._7P4	I	1400	①	11.00	4200		55
			②	9.20	3500	94	
			③	6.80	2600	83	
	II	1310	④	10.50	4000		60
			⑤	7.60	2900	92	
			⑥	5.60	2100	82	
	III	1100	⑦	6.20	2300		
			⑧	4.40	1700	87	
			⑨	3.30	1250	77	
	IV	840	⑩	2.80	1050		
			⑪	2.10	780	79	
			⑫	1.55	580	70	
	V	560	⑬	0.98	340		
			⑭	0.76	250	68	
			⑮	0.64	200	61	

Current values determined at 230V

Fan ordering information

Airflow direction A

Airflow direction V

Design	D (without guard grille)	Q (without guard grille)	Q (guard grille suction side)	S (guard grille pressure side)	I (guard grille pressure side)	Q (guard grille pressure side)
		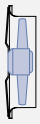	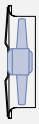			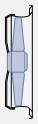
Type **Article no.**	**FN071-ZID.GL.A7P4** **155701**	**FN071-ZIQ.GL.A7P4** **155703**	**FN071-ZIQ.GL.A7P4** **155705**	**FN071-ZIS.GL.V7P4** **155693**	**FN071-ZII.GL.V7P4** **155695**	**FN071-ZIQ.GL.V7P4** **155697**
Weight kg	30.70	41.70	45.20	34.30	34.00	45.10

Control technology

Control modules	Add-on modules	Operating terminal
		
Page 452	Page 463	Page 472

Airflow direction V

Design S - radially bolted, mounted for short bell mouth, guard grille pressure side

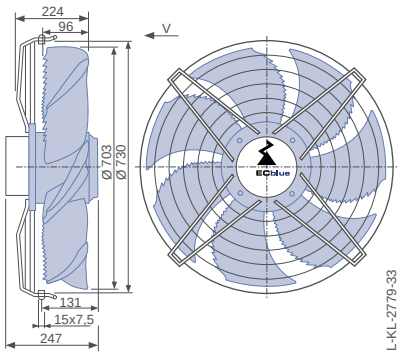

Design I - axial bolted, mounting for bell mouth flange, guard grille pressure side

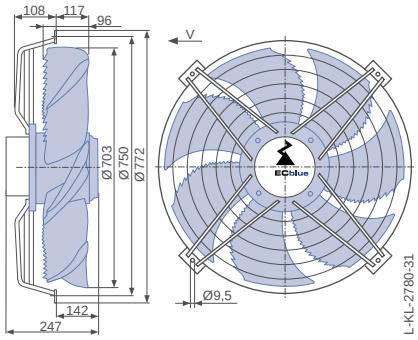

Design Q - square full bell mouth, guard grille pressure side

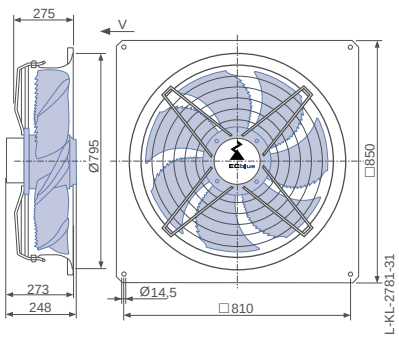

FE2owlet-EC blue

for three phase alternating current, 380-480 V

FN071



Characteristic curve

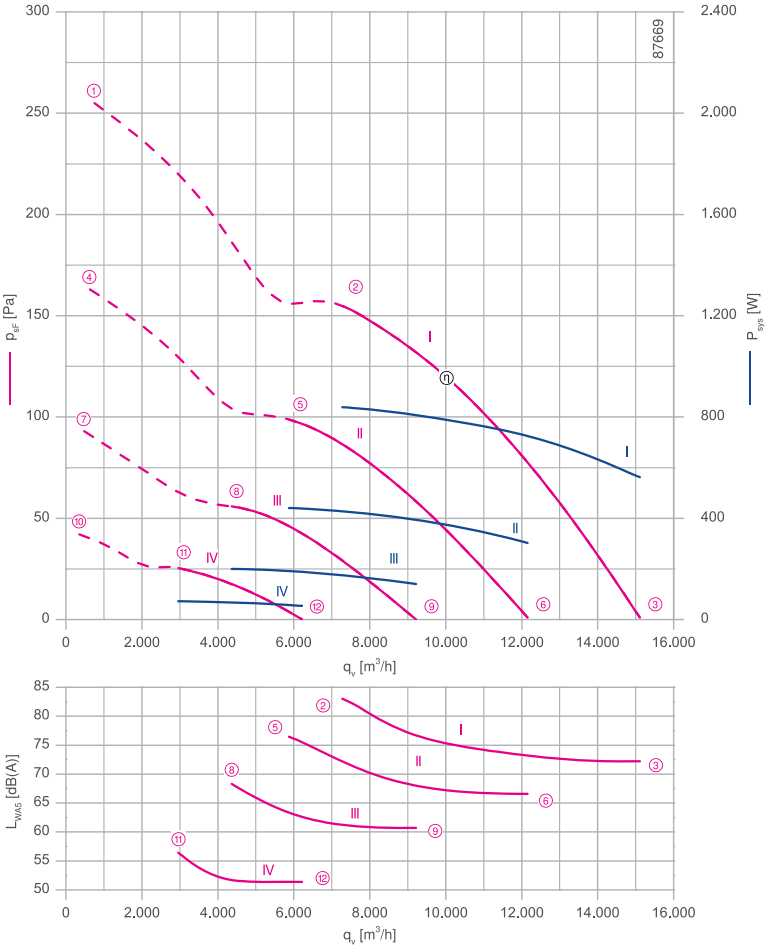

Measured in full bell mouth without guard grille in installation type A according to ISO 5801

Description

Motor technology: EC
Rated voltage U_N: **3~ 380-480 V***
Rated frequency f_N: **50/60 Hz***
Input power P_{sys}: **0.81 kW***
Rated current I_N: **1.40- 1.10 A***
Rated speed n_N: **960 min^{-1}***
Thermal class: **THCL155***
Min. permitted ambient temperature $t_{R(min)}$: -35 °C
Max. permitted ambient temperature $t_{R(max)}$: 60 °C
Electrical connection: integrated Controller
Number of blades: 7
Protection class: IP54
Motor protection: Integrated active temperature management
Blades: High Performance Composite Material, uncoated, black
Rotor: Steel, 2 coat paint, ultramarine blue
Conformity: ErP 2015, CE, UL
ErP-data
Efficiency η_{statA}: 48.2 %
Efficiency: N_{actual} = 55.1 / N_{target} = 40**
EC controller integrated
* Rated data
**ErP 2015

Connection diagram Page 530
1360-403

System components Page 430

Dimensions mm

Airflow direction A

Design D - axial bolted, suspension for full bell mouth, guard grille suction side

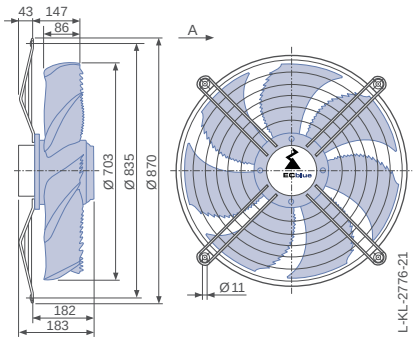

Design Q - square full bell mouth, guard grille suction side

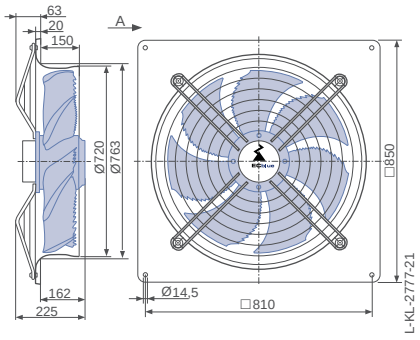

Airflow direction V

Design S - radially bolted, mounted for short bell mouth, guard grille pressure side

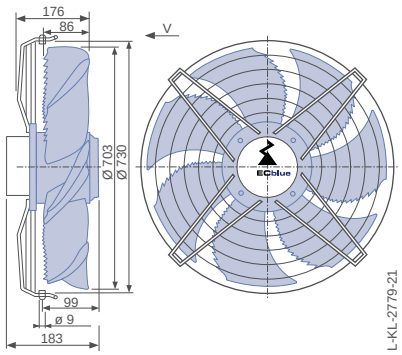

Performance data

Type	Characteristic curve	Speed n min⁻¹	Operating point	Current I A	Input power P_{sys} W	Suction side sound power level L_{WA5} dB(A)
FN071-ZI_.DG._7P3	I	960	①	1.80	1150	
			②	1.35	840	83
			③	0.98	560	72
	II	770	④	1.00	600	
			⑤	0.82	440	77
			⑥	0.64	300	67
	III	580	⑦	0.58	260	
			⑧	0.48	200	68
			⑨	0.37	140	61
	IV	390	⑩	0.30	90	
			⑪	0.26	70	57
			⑫	0.23	55	51

Current values determined at 400V

Fan ordering information

	Airflow direction A		Airflow direction V	
Design	D (guard grille suction side)	Q (guard grille suction side)	S (guard grille pressure side)	Q (guard grille pressure side)
		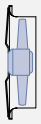		
Type	**FN071-ZID.DG.A7P3**	**FN071-ZIQ.DG.A7P3**	**FN071-ZIS.DG.V7P3**	**FN071-ZIQ.DG.V7P3**
Article no.	**154317**	**154329**	**154341**	**154353**
Weight kg	15.20	26.10	15.30	26.20

Control technology

Control modules	Add-on modules	Operating terminal
		
Page 452	Page 463	Page 472

Design Q - square full bell mouth, guard grille pressure side

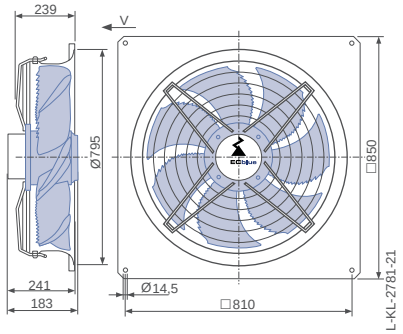

FE2owlet-EC blue

for three phase alternating current, 380-480 V

FN071



Description

Motor technology: EC
Rated voltage U_N: **3~ 380-480 V***
Rated frequency f_N: **50/60 Hz***
Input power P_{sys}: **1.95 kW***
Rated current I_N: **3.20- 2.50 A***
Rated speed n_N: **1150 min^{-1}***
Thermal class: **THCL155***
Min. permitted ambient temperature $t_{R(min)}$: -35 °C
Max. permitted ambient temperature $t_{R(max)}$: 65 °C
Electrical connection: integrated Controller
Number of blades: 7
Protection class: IP54
Motor protection: Integrated active temperature management
Blades: Aluminium, uncoated
Rotor: Steel, 2 coat paint, ultramarine blue
Conformity: ErP 2015, CE, UL
ErP-data
Efficiency η_{statA}: 44.8 %
Efficiency: N_{actual} = 49.5 / N_{target} = 40**
EC controller integrated
* Rated data
**ErP 2015

Characteristic curve

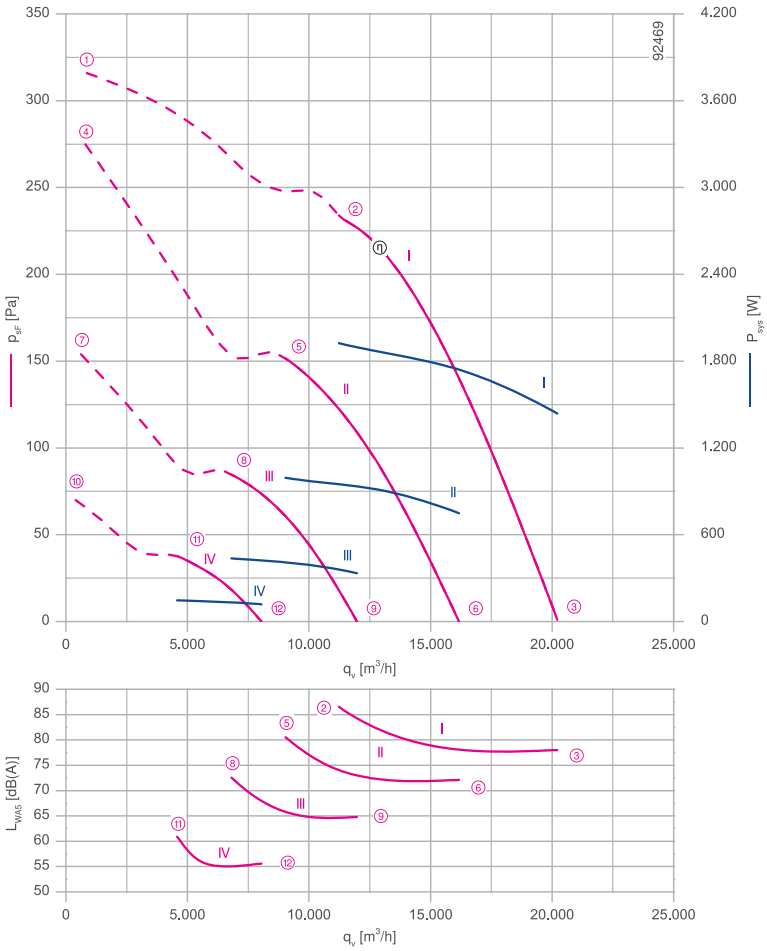

Measured in full bell mouth without guard grille in installation type A according to ISO 5801

Connection diagram Page 530
1360-403

System components Page 430

Dimensions mm

Airflow direction A

Design Q - square full bell mouth, without guard grille

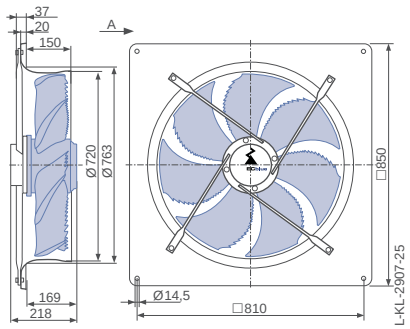

Design Q - square full bell mouth, guard grille suction side

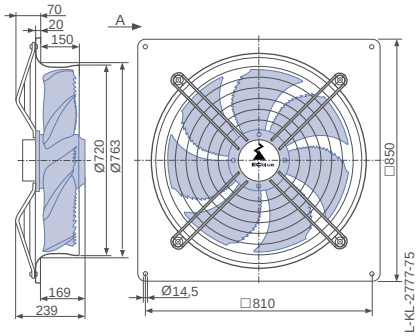

Airflow direction V

Design Q - square full bell mouth, guard grille pressure side

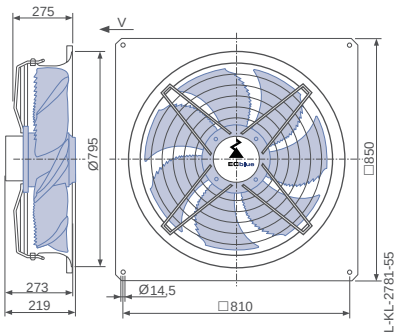

Performance data

Type	Characteristic curve	Speed n min⁻¹	Operating point	Current I A	Input power P_{sys} W	Suction side sound power level L_{WA5} dB(A)
FN071-ZI_.GG._7P4	I	1150	①	2.80	1750	
			②	3.10	1950	87
			③	2.30	1450	78
	II	920	④	2.30	1400	
			⑤	1.70	1000	81
			⑥	1.30	740	72
	III	690	⑦	1.10	600	
			⑧	0.88	440	73
			⑨	0.70	330	65
	IV	460	⑩	0.48	200	
			⑪	0.39	150	61
			⑫	0.34	120	56

Current values determined at 400V

Fan ordering information

Airflow direction A			Airflow direction V
Design	Q (without guard grille)	Q (guard grille suction side)	Q (guard grille pressure side)
		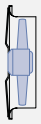	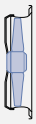
Type	**FN071-ZIQ.GG.A7P4**	**FN071-ZIQ.GG.A7P4**	**FN071-ZIQ.GG.V7P4**
Article no.	**154920**	**154924**	**154908**
Weight kg	37.50	41.00	41.00

Control technology

Control modules	Add-on modules	Operating terminal
		
Page 452	Page 463	Page 472

FE2owlet-ECblue

for three phase alternating current, 380-480 V

FN071



Description

Motor technology: EC
Rated voltage U_N: **3~ 380-480 V***
Rated frequency f_N: **50/60 Hz***
Input power P_{sys}: **3.50 kW***
Rated current I_N: **5.40- 4.30 A***
Rated speed n_N: **1400 min^{-1}***
Thermal class: **THCL155***
Min. permitted ambient temperature $t_{R(min)}$: -35 °C
Max. permitted ambient temperature $t_{R(max)}$: 60 °C
Electrical connection: integrated Controller
Number of blades: 7
Protection class: IP54
Motor protection: Integrated active temperature management
Blades: Aluminium, uncoated
Rotor: Steel, 2 coat paint, ultramarine blue
Conformity: ErP 2015, CE, UL
ErP-data
Efficiency η_{statA}: 44.8 %
Efficiency: N_{actual} = 47.8 / N_{target} = 40**
EC controller integrated
* Rated data
**ErP 2015

Characteristic curve

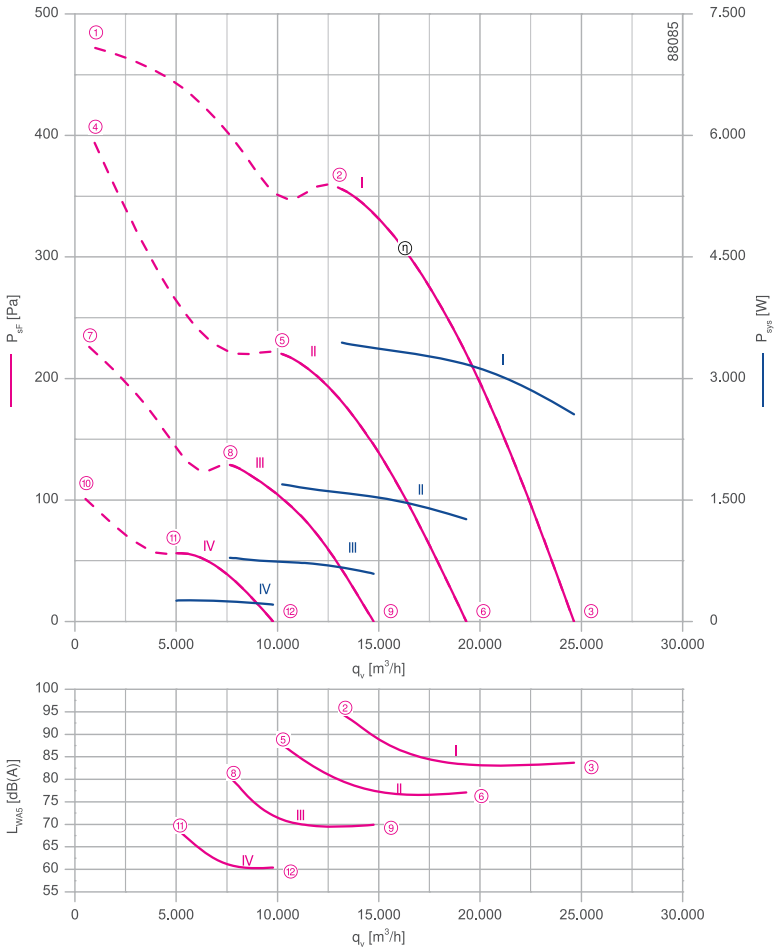

Measured in full bell mouth without guard grille in installation type A according to ISO 5801

Connection diagram Page 530
1360-403

System components Page 430

Dimensions mm

Airflow direction A

Design D - axial bolted, suspension for full bell mouth, without guard grille

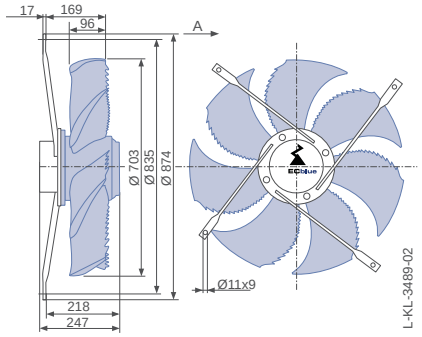

Design Q - square full bell mouth, without guard grille

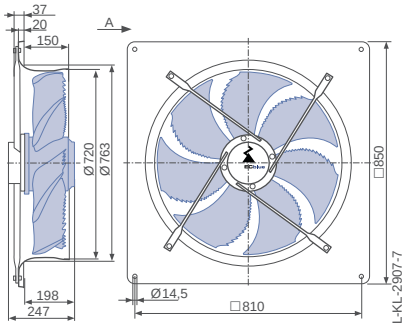

Design Q - square full bell mouth, guard grille suction side

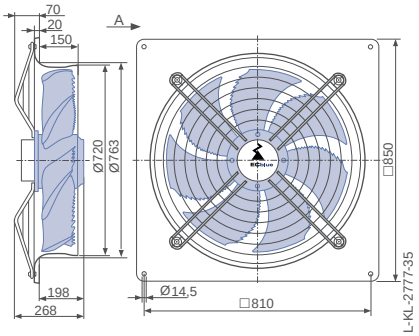

Performance data

Type	Characteristic curve	Speed n min⁻¹	Operating point	Current I A	Input power P_{sys} W	Suction side sound power level L_{WA5} dB(A)
FN071-ZI_.GL._7P4	I	1400	①	4.80	3100	
			②	5.20	3500	95
			③	3.90	2600	84
	II	1100	④	3.50	2300	
			⑤	2.60	1700	88
			⑥	1.95	1250	77
	III	840	⑦	1.70	1050	
			⑧	1.30	780	80
			⑨	1.00	600	70
	IV	560	⑩	0.72	350	
			⑪	0.60	260	69
			⑫	0.50	210	60

Current values determined at 400V

Fan ordering information

Airflow direction A

Airflow direction V

Design	D (without guard grille)	Q (without guard grille)	Q (guard grille suction side)	S (guard grille pressure side)	I (guard grille pressure side)	Q (guard grille pressure side)
		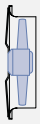				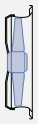
Type **Article no.**	**FN071-ZID.GL.A7P4** **154918**	**FN071-ZIQ.GL.A7P4** **154922**	**FN071-ZIQ.GL.A7P4** **154926**	**FN071-ZIS.GL.V7P4** **154996**	**FN071-ZII.GL.V7P4** **154906**	**FN071-ZIQ.GL.V7P4** **154910**
Weight kg	30.70	41.70	45.20	34.30	34.00	45.10

Control technology

Control modules	Add-on modules	Operating terminal
		
Page 452	Page 463	Page 472

Airflow direction V

Design S - radially bolted, mounted for short bell mouth, guard grille pressure side

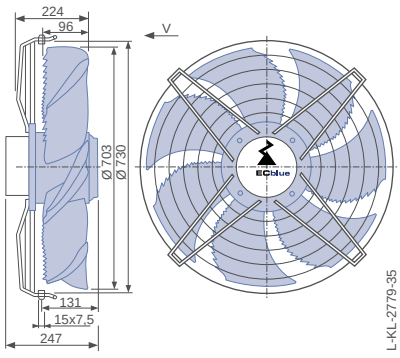

Design I - axial bolted, mounting for bell mouth flange, guard grille pressure side

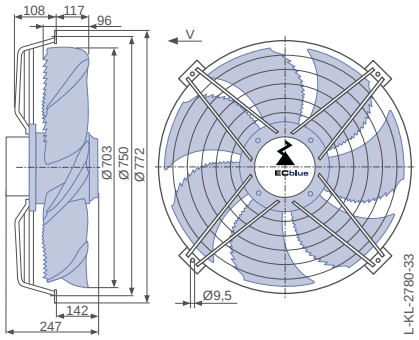

Design Q - square full bell mouth, guard grille pressure side

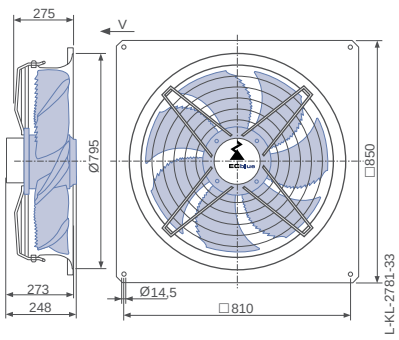

FE2owlet-ECblue

for single phase alternating current, 200-277 V

FN080



Description

Motor technology: EC
Rated voltage U_N: **1~ 200-277 V***
Rated frequency f_N: **50/60 Hz***
Input power P_{sys}: **0.70 kW***
Rated current I_N: **3.70- 2.70 A***
Rated speed n_N: **650 min^{-1}***
Thermal class: **THCL155***
Min. permitted ambient temperature $t_{R(min)}$: -35 °C
Max. permitted ambient temperature $t_{R(max)}$: 60 °C
Electrical connection: integrated Controller
Number of blades: 5
Protection class: IP54
Motor protection: Integrated active temperature management
Blades: High Performance Composite Material, uncoated, black
Rotor: Steel, 2 coat paint, ultramarine blue
Conformity: ErP 2015, CE, UL
ErP-data
Efficiency η_{statA}: 42.0 %
Efficiency: N_{actual} = 49.5 / N_{target} = 40**
EC controller integrated
* Rated data
**ErP 2015

Characteristic curve

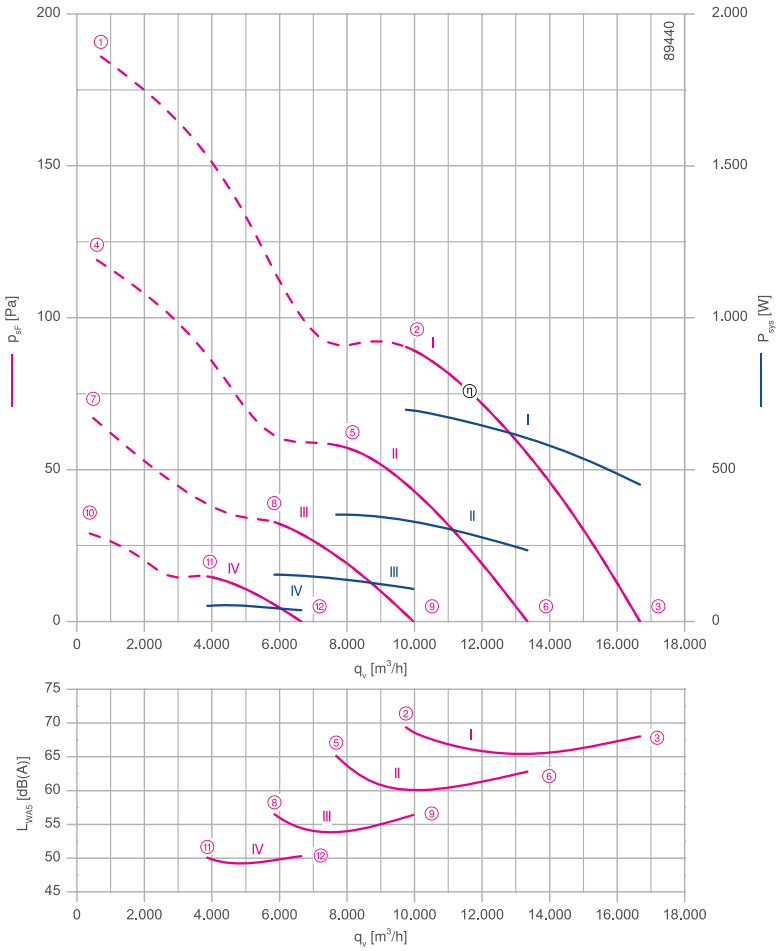

Measured in full bell mouth without guard grille in installation type A according to ISO 5801

Connection diagram Page 530
1360-403

System components Page 430

Dimensions mm

Airflow direction A

Design D - axial bolted, suspension for full bell mouth, guard grille suction side

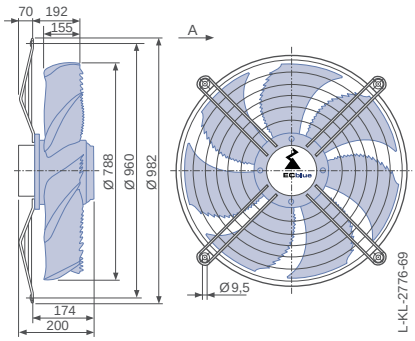

Design Q - square full bell mouth, guard grille suction side

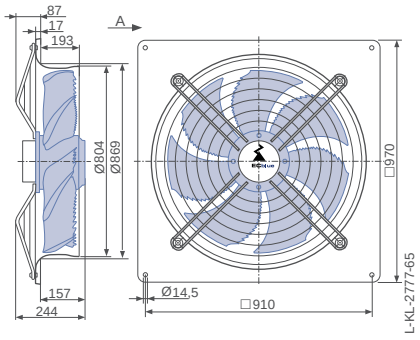

Airflow direction V

Design S - radially bolted, mounted for short bell mouth, guard grille pressure side

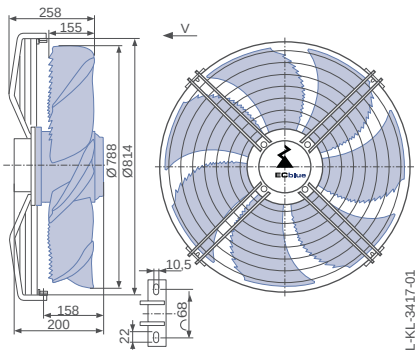

Performance data

Type	Characteristic curve	Speed n min⁻¹	Operating point	Current I A	Input power P_{sys} W	Suction side sound power level L_{WA5} dB(A)
FN080-ZI_.DG._5P4	I	650	①	4.60	1000	
			②	3.20	700	70
			③	2.10	460	68
	II	520	④	2.40	500	
			⑤	1.65	350	65
			⑥	1.10	230	63
	III	390	⑦	1.00	220	
			⑧	0.72	150	57
			⑨	0.54	110	56
	IV	260	⑩	0.40	70	
			⑪	0.46	50	50
			⑫	0.40	38	50

Current values determined at 230V

Fan ordering information

Airflow direction A			Airflow direction V		
Design	D (guard grille suction side)	Q (guard grille suction side)	S (guard grille pressure side)	I (guard grille pressure side)	Q (guard grille pressure side)
		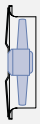			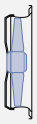
Type	**FN080-ZID.DG.A5P4**	**FN080-ZIQ.DG.A5P4**	**FN080-ZIS.DG.V5P4**	**FN080-ZII.DG.V5P4**	**FN080-ZIQ.DG.V5P4**
Article no.	**157181**	**157182**	**157186**	**157184**	**157185**
Weight kg	20.90	35.60	19.80	19.30	34.10

Control technology

Control modules	Add-on modules	Operating terminal
		
Page 452	Page 463	Page 472

Design I - axial bolted, mounting for bell mouth flange, guard grille pressure side

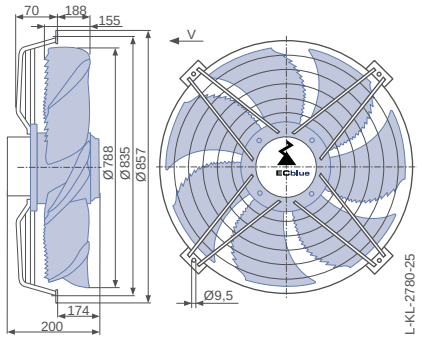

Design Q - square full bell mouth, guard grille pressure side

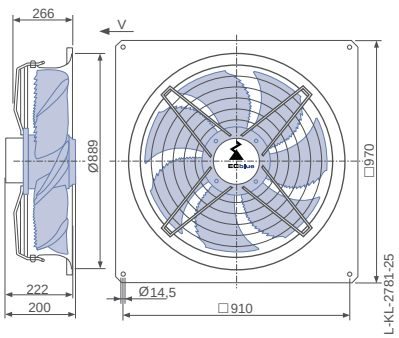

FE2owlet-EC blue

for three phase alternating current, 200-240 V

FN080



Description

Motor technology: EC
Rated voltage U: **3~ 200-240 V***
Rated frequency f: **50/60 Hz***
Motor input power P_{sys}: **0.83 kW***
Rated current I: **2.60- 2.20 A***
Rated speed n_{max}: **700 min^{-1}***
Thermal class: **THCL155***
Min. permitted conveyor temperature $t_{R(min)}$: -35 °C
Max. permitted conveyor temperature $t_{R(max)}$: 60 °C
Electrical connection: integrated Controller
Number of blades: 5
Protection class: IP54
Motor protection: Integrated active temperature management
Blades: High Performance Composite Material, uncoated, black
Rotor: Steel, 2 coat paint, Ultramarine blue
Conformity: ErP 2015, CE, UL
ErP Data
Efficiency η_{statA}: 43.2 %
Efficiency: N_{actual} = 50.2 / N_{target} = 40**
EC controller integrated
* Rated data
**ErP 2015

Characteristic curve

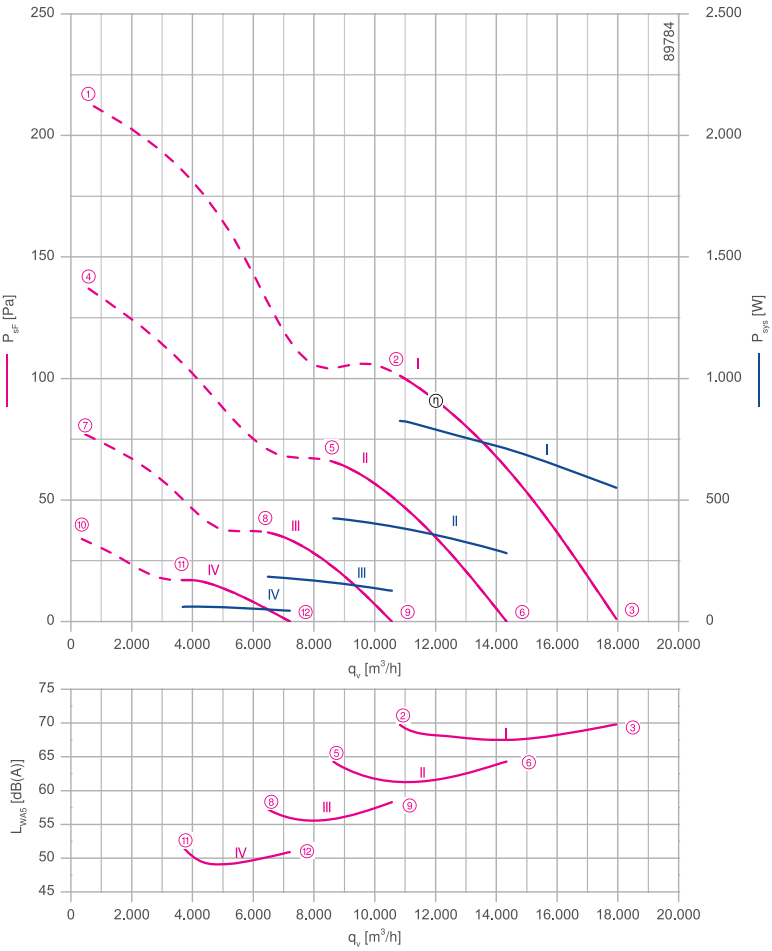

Measured in full bell mouth without guard grille in installation type A according to ISO 5801

Connection diagram Page 530
1360-403

System components Page 430

Dimensions mm

Airflow direction A

Design D - axial bolted, suspension for full bell mouth, guard grille suction side

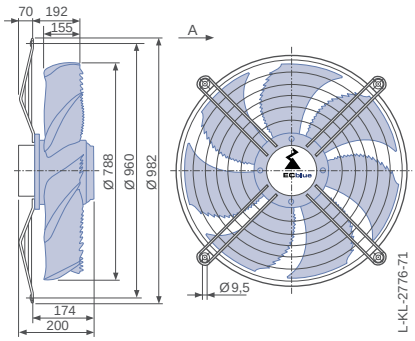

Design Q - square full bell mouth, guard grille suction side

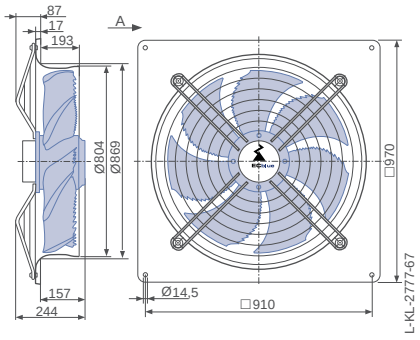

Airflow direction V

Design S - radially bolted, mounted for short bell mouth, guard grille pressure side

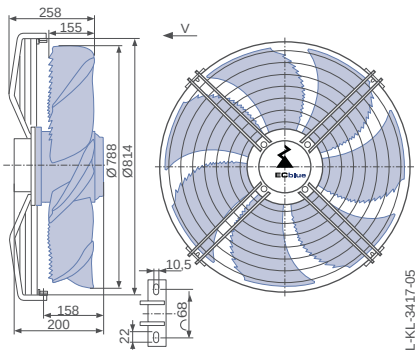

Performance data

Type	Characteristic curve	Speed n min⁻¹	Operating point	Current I A	Input power P_{sys} W	Suction side sound power level L_{WA5} dB(A)
FN080-ZI_.DG._5P4	I	700	①	3.20	1200	
			②	2.20	820	70
			③	1.50	560	70
	II	560	④	1.65	600	
			⑤	1.20	420	64
			⑥	0.80	280	64
	III	420	⑦	0.74	260	
			⑧	0.58	190	57
			⑨	0.44	130	58
	IV	280	⑩	0.34	80	
			⑪	0.27	60	50
			⑫	0.21	44	51

Current values determined at 230V

Fan ordering information

Airflow direction A			Airflow direction V	
Design	D (guard grille suction side)	Q (guard grille suction side)	S (guard grille pressure side)	I (guard grille pressure side)	Q (guard grille pressure side)
		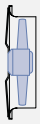			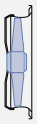
Type	**FN080-ZID.DG.A5P4**	**FN080-ZIQ.DG.A5P4**	**FN080-ZIS.DG.V5P4**	**FN080-ZII.DG.V5P4**	**FN080-ZIQ.DG.V5P4**
Article no.	**157209**	**157210**	**157214**	**157212**	**157213**
Weight kg	20.90	35.60	19.80	19.30	34.10

Control technology

Control modules	Add-on modules	Operating terminal
		
Page 452	Page 463	Page 472

Design I - axial bolted, mounting for bell mouth flange, guard grille pressure side

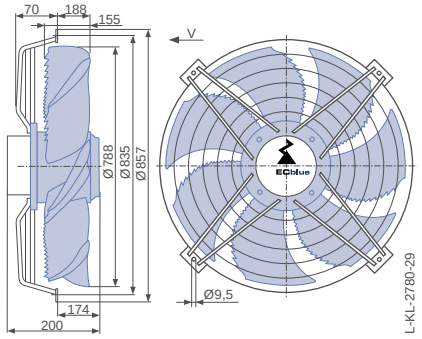

Design Q - square full bell mouth, guard grille pressure side

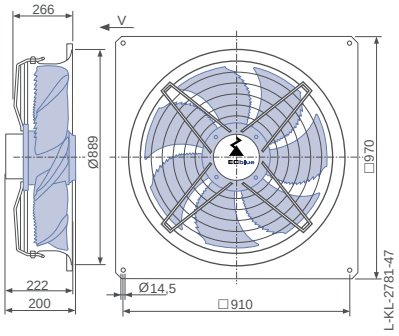

FE2owlet-ECblue

for three phase alternating current, 200-240 V

FN080



Characteristic curve

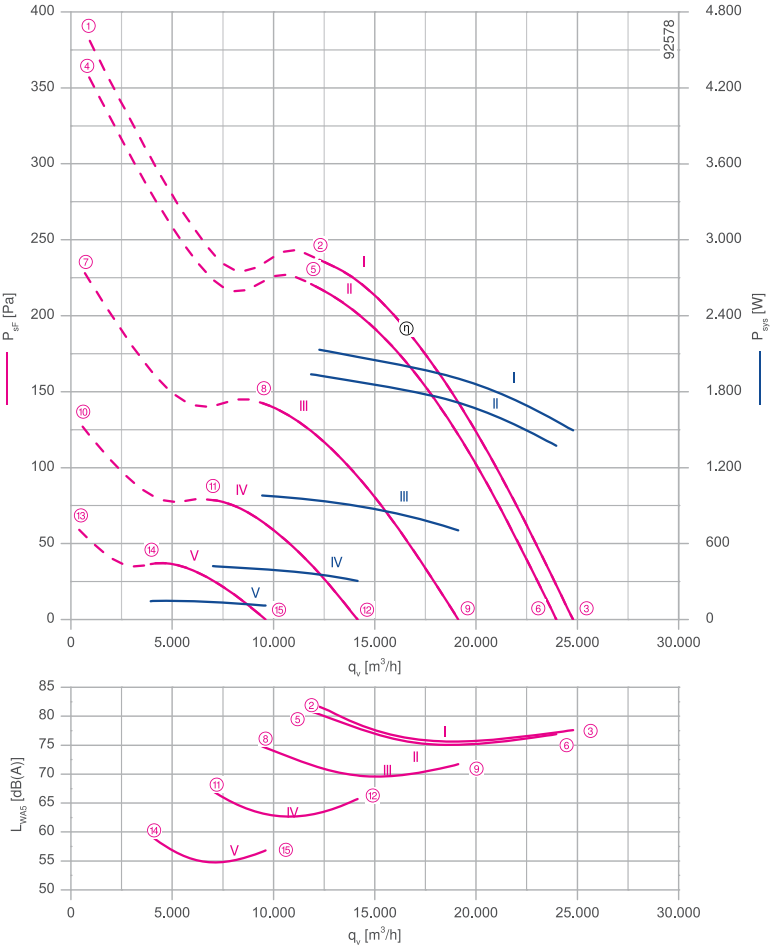

Measured in full bell mouth without guard grille in installation type A according to ISO 5801

Description

Motor technology: EC
Rated voltage U_N: **3~ 200-240 V***
Rated frequency f_N: **50/60 Hz***
Input power P_{sys}: **2.10 kW***
Rated current I_N: **6.60- 5.50 A***
Rated speed n_N: **970 min^{-1}***
Thermal class: **THCL155***
Min. permitted ambient temperature $t_{R(min)}$: -35 °C
Max. permitted ambient temperature $t_{R(max)}$: 55 °C
Electrical connection: integrated Controller
Number of blades: 7
Protection class: IP54
Motor protection: Integrated active temperature management
Blades: Aluminium, uncoated
Rotor: Steel, 2 coat paint, ultramarine blue
Conformity: ErP 2015, CE, UL
ErP-data
Efficiency η_{statA}: 47.7 %
Efficiency: N_{actual} = 52.1 / N_{target} = 40**
EC controller integrated
* Rated data
**ErP 2015

Connection diagram Page 530
1360-403

System components Page 430

Dimensions mm

Airflow direction A

Design Q - square full bell mouth, without guard grille

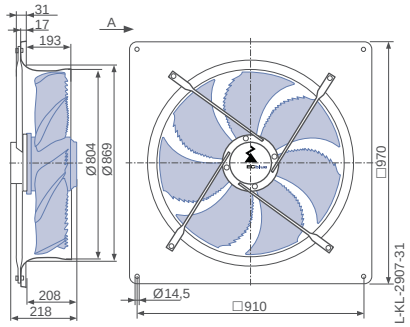

Design Q - square full bell mouth, guard grille suction side

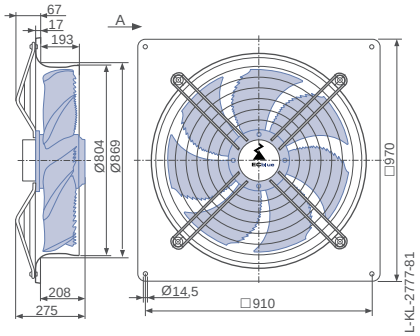

Airflow direction V

Design Q - square full bell mouth, guard grille pressure side

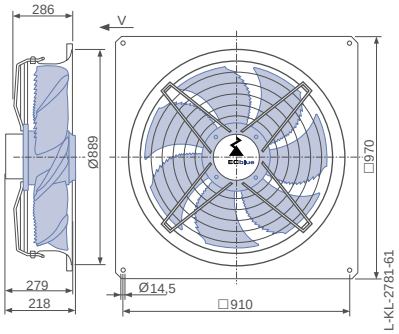

Performance data

Type	Characteristic curve	Speed n min⁻¹	Operating point	Current I A	Input power P_{sys} W	Suction side sound power level L_{WA5} dB(A)	Maximum ambient temperature t_R °C
FN080-ZI_.GG._7P3	I	970	①	8.00	3000		55
			②	5.80	2100	82	
			③	4.00	1500	78	
	II	940	④	7.20	2700		60
			⑤	5.20	1950	81	
			⑥	3.70	1350	77	
	III	750	⑦	3.60	1350		
			⑧	2.70	980	75	
			⑨	1.95	700	72	
	IV	560	⑩	1.55	560		
			⑪	1.20	420	67	
			⑫	0.88	300	66	
	V	380	⑬	0.62	190		
			⑭	0.52	150	57	
			⑮	0.42	110	57	

Current values determined at 230V

Fan ordering information

Airflow direction A			Airflow direction V
Design	Q (without guard grille)	Q (guard grille suction side)	Q (guard grille pressure side)
		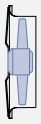	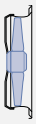
Type	**FN080-ZIQ.GG.A7P3**	**FN080-ZIQ.GG.A7P3**	**FN080-ZIQ.GG.V7P3**
Article no.	**159854**	**159856**	**159848**
Weight kg	45.90	49.00	47.70

Control technology

Control modules	Add-on modules	Operating terminal
		
Page 452	Page 463	Page 472

FE2owlet-ECblue

for three phase alternating current, 200-240 V

FN080



Description

Motor technology: EC
Rated voltage U_N: **3~ 200-240 V***
Rated frequency f_N: **50/60 Hz***
Input power P_{sys}: **3.10 kW***
Rated current I_N: **9.40- 7.80 A***
Rated speed n_N: **1100 min^{-1}***
Thermal class: **THCL155***
Min. permitted ambient temperature $t_{R(min)}$: -35 °C
Max. permitted ambient temperature $t_{R(max)}$: 40 °C
Electrical connection: integrated Controller
Number of blades: 7
Protection class: IP54
Motor protection: Integrated active temperature management
Blades: Aluminium, uncoated
Rotor: Steel, 2 coat paint, ultramarine blue
Conformity: ErP 2015, CE, UL
ErP-data
Efficiency η_{statA}: 47.2 %
Efficiency: N_{actual} = 50.6 / N_{target} = 40**
EC controller integrated
* Rated data
**ErP 2015

Characteristic curve

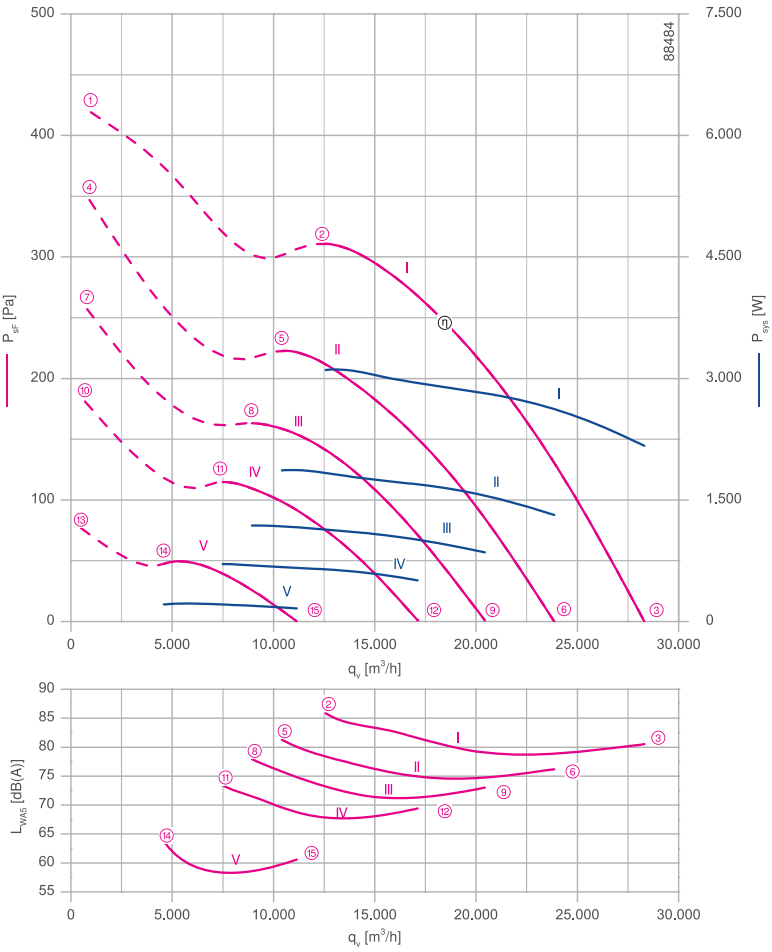

Measured in full bell mouth without guard grille in installation type A according to ISO 5801

Connection diagram Page 530
1360-403

System components Page 430

Dimensions mm

Airflow direction A

Design D - axial bolted, suspension for full bell mouth, without guard grille

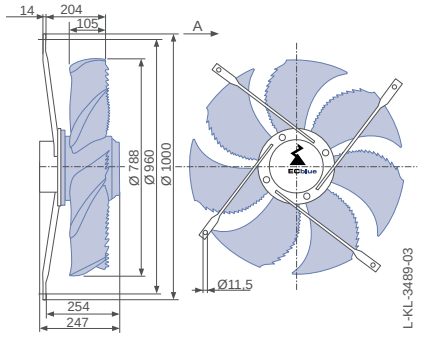

Design Q - square full bell mouth, without guard grille

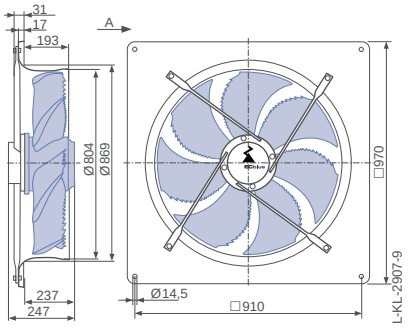

Design Q - square full bell mouth, guard grille suction side

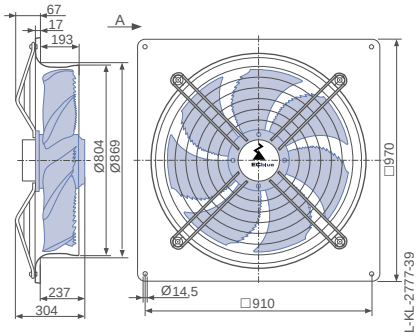

Performance data

Type	Characteristic curve	Speed n min⁻¹	Operating point	Current I A	Input power P_{sys} W	Suction side sound power level L_{WA5} dB(A)	Maximum ambient temperature t_R °C
FN080-ZI_.GL._7P3	I	1100	①	9.00	3400		40
			②	8.20	3100	86	
			③	5.60	2200	81	
	II	930	④	6.80	2600		60
			⑤	4.80	1850	81	
			⑥	3.50	1300	76	
	III	800	⑦	4.20	1600		
			⑧	3.10	1200	78	
			⑨	2.30	860	73	
	IV	670	⑩	2.50	940		
			⑪	1.90	700	74	
			⑫	1.40	500	69	
	V	440	⑬	0.84	280		
			⑭	0.68	220	62	
			⑮	0.56	160	61	

Current values determined at 230V

Fan ordering information

Airflow direction A

Airflow direction V

Design	D (without guard grille)	Q (without guard grille)	Q (guard grille suction side)	S (guard grille pressure side)	I (guard grille pressure side)	Q (guard grille pressure side)
		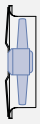	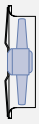			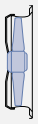
Type **Article no.**	**FN080-ZID.GL.A7P3** **155717**	**FN080-ZIQ.GL.A7P3** **155719**	**FN080-ZIQ.GL.A7P3** **155721**	**FN080-ZIS.GL.V7P3** **155709**	**FN080-ZII.GL.V7P3** **155711**	**FN080-ZIQ.GL.V7P3** **155713**
Weight kg	35.30	50.10	53.90	37.50	36.80	51.90

Control technology

Control modules	Add-on modules	Operating terminal
		
Page 452	Page 463	Page 472

Airflow direction V

Design S - radially bolted, mounted for short bell mouth, guard grille pressure side

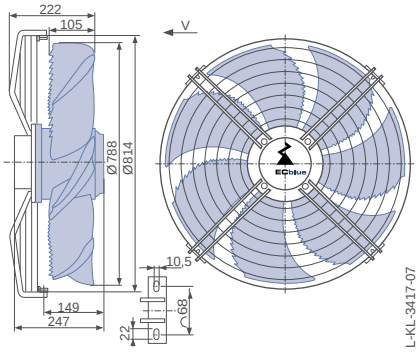

Design I - axial bolted, mounting for bell mouth flange, guard grille pressure side

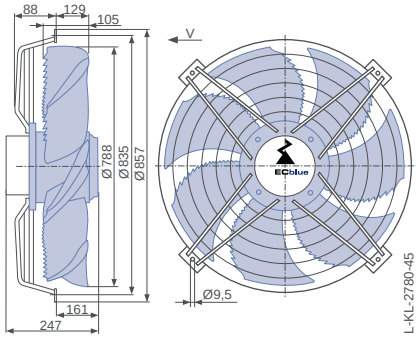

Design Q - square full bell mouth, guard grille pressure side

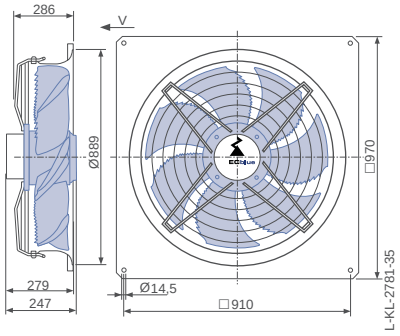

FE2owlet-EC blue

for three phase alternating current, 380-480 V

FN080



Characteristic curve

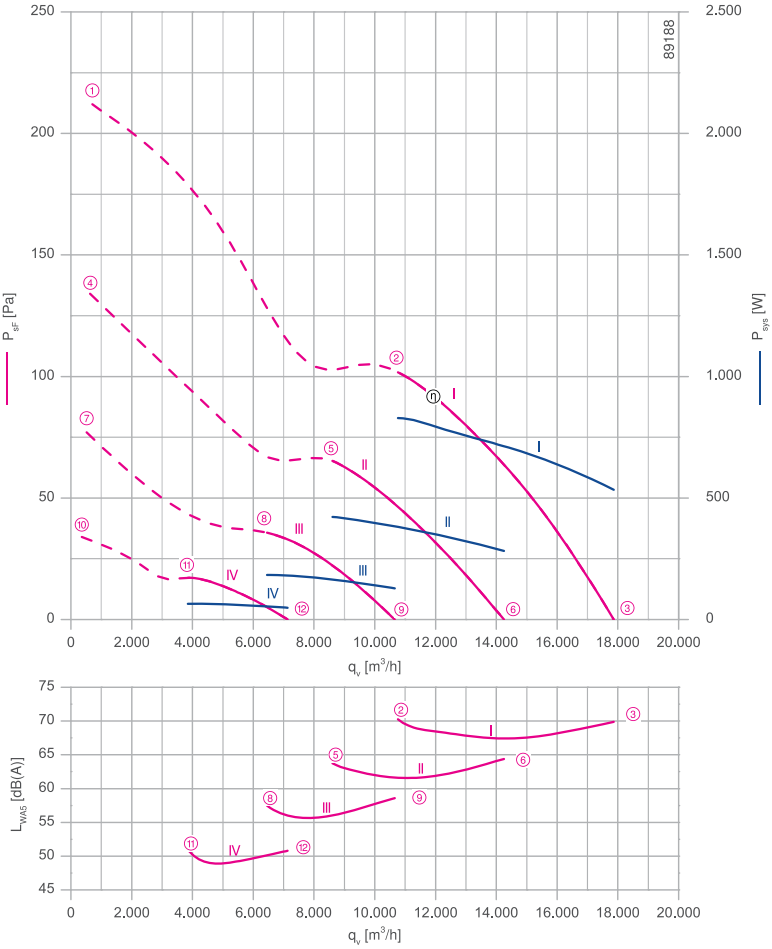

Measured in full bell mouth without guard grille in installation type A according to ISO 5801

Description

Motor technology: EC
Rated voltage U: **3~ 380-480 V***
Rated frequency f: **50/60 Hz***
Motor input power P_{sys}: **0.83 kW***
Rated current I: **1.45- 1.15 A***
Rated speed n_{max}: **700 min^{-1}***
Thermal class: **THCL155***
Min. permitted conveyor temperature $t_{R(min)}$: -35 °C
Max. permitted conveyor temperature $t_{R(max)}$: 60 °C
Electrical connection: integrated Controller
Number of blades: 5
Protection class: IP54
Motor protection: Integrated active temperature management
Blades: High Performance Composite Material, uncoated, black
Rotor: Steel, 2 coat paint, Ultramarine blue
Conformity: ErP 2015, CE, UL
ErP Data
Efficiency η_{statA}: 44.3 %
Efficiency: N_{actual} = 51.4 / N_{target} = 40**
EC controller integrated
* Rated data
**ErP 2015

Connection diagram Page 530
1360-403

System components Page 430

Dimensions mm

Airflow direction A

Design D - axial bolted, suspension for full bell mouth, guard grille suction side

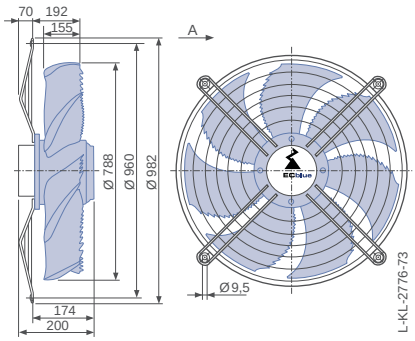

Design Q - square full bell mouth, guard grille suction side

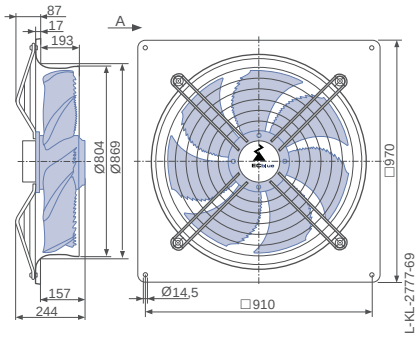

Airflow direction V

Design S - radially bolted, mounted for short bell mouth, guard grille pressure side

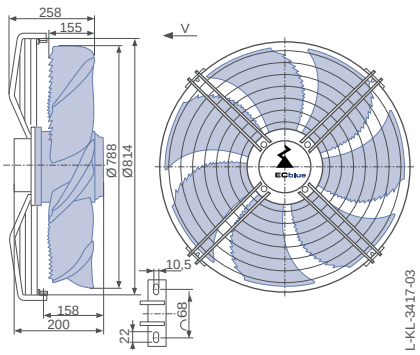

Performance data

Type	Characteristic curve	Speed n min⁻¹	Operating point	Current I A	Input power P_{sys} W	Suction side sound power level L_{WA5} dB(A)
FN080-ZI_.DG._5P4	I	700	①	1.85	1200	
			②	1.35	820	70
			③	0.94	540	70
	II	560	④	1.05	600	
			⑤	0.80	420	64
			⑥	0.62	280	64
	III	420	⑦	0.58	250	
			⑧	0.46	180	58
			⑨	0.36	130	59
	IV	280	⑩	0.29	85	
			⑪	0.26	65	50
			⑫	0.23	48	51

Current values determined at 400V

Fan ordering information

Airflow direction A			Airflow direction V	
Design	D (guard grille suction side)	Q (guard grille suction side)	S (guard grille pressure side)	I (guard grille pressure side)	Q (guard grille pressure side)
		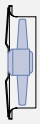			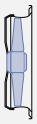
Type	**FN080-ZID.DG.A5P4**	**FN080-ZIQ.DG.A5P4**	**FN080-ZIS.DG.V5P4**	**FN080-ZII.DG.V5P4**	**FN080-ZIQ.DG.V5P4**
Article no.	**157195**	**157196**	**157200**	**157198**	**157199**
Weight kg	20.90	35.60	19.80	19.30	34.10

Control technology

Control modules	Add-on modules	Operating terminal
		
Page 452	Page 463	Page 472

Design I - axial bolted, mounting for bell mouth flange, guard grille pressure side

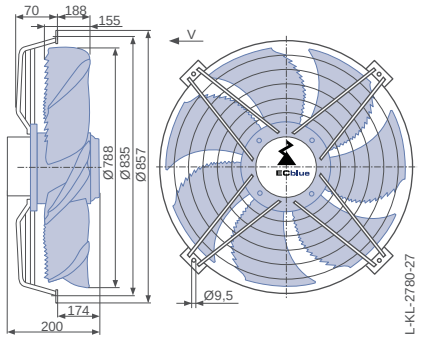

Design Q - square full bell mouth, guard grille pressure side

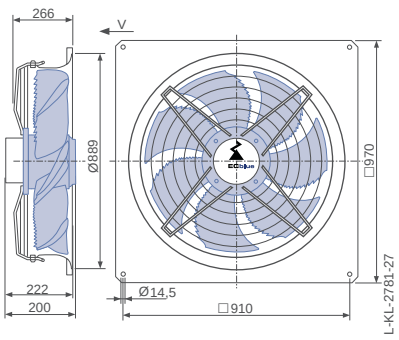

FE2owlet-ECblue

for three phase alternating current, 380-480 V

FN080



Description

Motor technology: EC
Rated voltage U_N: **3~ 380-480 V***
Rated frequency f_N: **50/60 Hz***
Input power P_{sys}: **1.95 kW***
Rated current I_N: **3.30- 2.60 A***
Rated speed n_N: **950 min^{-1}***
Thermal class: **THCL155***
Min. permitted ambient temperature $t_{R(min)}$: -35 °C
Max. permitted ambient temperature $t_{R(max)}$: 60 °C
Electrical connection: integrated Controller
Number of blades: 7
Protection class: IP54
Motor protection: Integrated active temperature management
Blades: Aluminium, uncoated
Rotor: Steel, 2 coat paint, ultramarine blue
Conformity: ErP 2015, CE, UL
ErP-data
Efficiency η_{statA}: 48.7 %
Efficiency: N_{actual} = 53.4 / N_{target} = 40**
EC controller integrated
* Rated data
**ErP 2015

Characteristic curve

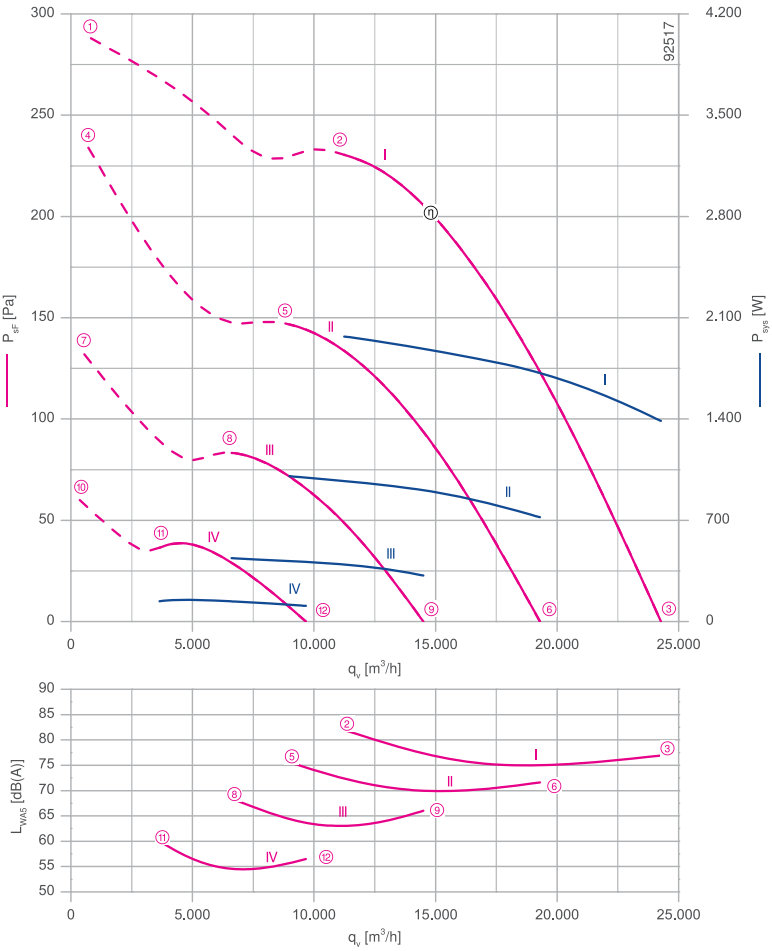

Measured in full bell mouth without guard grille in installation type A according to ISO 5801

Connection diagram Page 530
1360-403

System components Page 430

Dimensions mm

Airflow direction A

Design Q - square full bell mouth, without guard grille

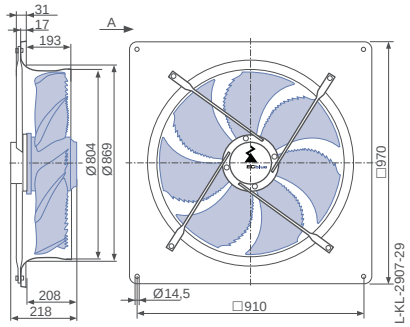

Design Q - square full bell mouth, guard grille suction side

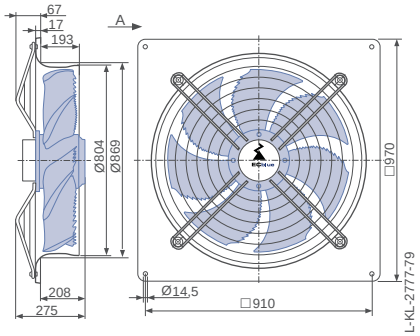

Airflow direction V

Design Q - square full bell mouth, guard grille pressure side

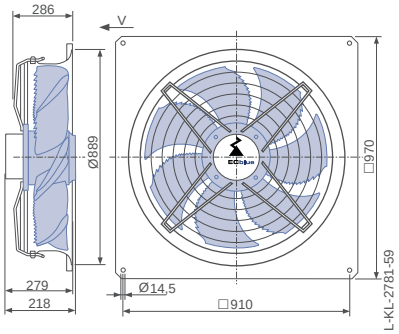

Performance data

Type	Characteristic curve	Speed n min⁻¹	Operating point	Current I A	Input power P_{sys} W	Suction side sound power level L_{WA5} dB(A)
FN080-ZI_.GG._7P3	I	950	①	3.00	1900	
			②	3.10	1950	82
			③	2.20	1400	77
	II	760	④	2.20	1400	
			⑤	1.70	1000	76
			⑥	1.25	720	72
	III	570	⑦	1.05	580	
			⑧	0.84	440	68
			⑨	0.66	320	66
	IV	380	⑩	0.46	190	
			⑪	0.39	140	58
			⑫	0.32	110	57

Current values determined at 400V

Fan ordering information

Airflow direction A			Airflow direction V
Design	Q (without guard grille)	Q (guard grille suction side)	Q (guard grille pressure side)
		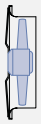	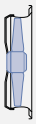
Type	**FN080-ZIQ.GG.A7P3**	**FN080-ZIQ.GG.A7P3**	**FN080-ZIQ.GG.V7P3**
Article no.	**154809**	**154813**	**154944**
Weight kg	45.90	49.70	47.70

Control technology

Control modules	Add-on modules	Operating terminal
		
Page 452	Page 463	Page 472

FE2owlet-ECblue

for three phase alternating current, 380-480 V

FN080



Description

Motor technology: EC
Rated voltage U_N: **3~ 380-480 V***
Rated frequency f_N: **50/60 Hz***
Input power P_{sys}: **3.10 kW***
Rated current I_N: **4.80- 3.80 A***
Rated speed n_N: **1100 min^{-1}***
Thermal class: **THCL155***
Min. permitted ambient temperature $t_{R(min)}$: -35 °C
Max. permitted ambient temperature $t_{R(max)}$: 55 °C
Electrical connection: integrated Controller
Number of blades: 7
Protection class: IP54
Motor protection: Integrated active temperature management
Blades: Aluminium, uncoated
Rotor: Steel, 2 coat paint, ultramarine blue
Conformity: ErP 2015, CE, UL
ErP-data
Efficiency η_{statA}: 46.4 %
Efficiency: N_{actual} = 49.9 / N_{target} = 40**
EC controller integrated
* Rated data
**ErP 2015

Characteristic curve

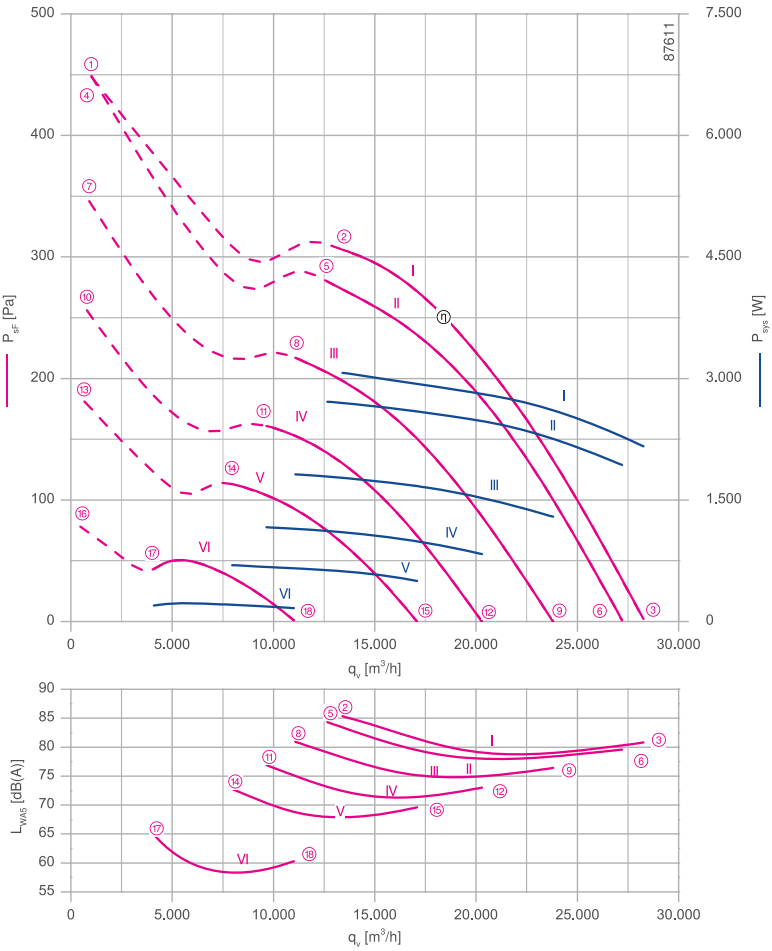

Measured in full bell mouth without guard grille in installation type A according to ISO 5801

Connection diagram Page 530
1360-403

System components Page 430

Dimensions mm

Airflow direction A

Design D - axial bolted, suspension for full bell mouth, without guard grille

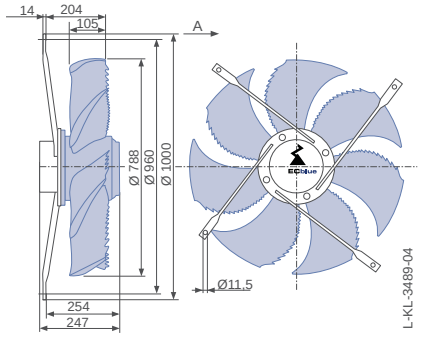

Design Q - square full bell mouth, without guard grille

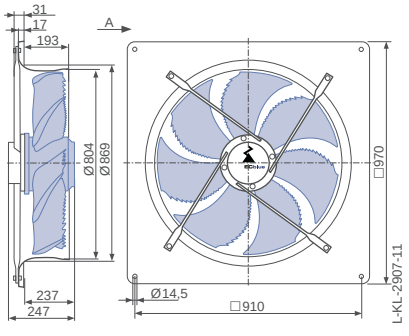

Design Q - square full bell mouth, guard grille suction side

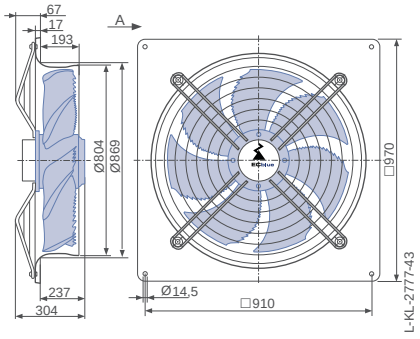

Performance data

Type	Characteristic curve	Speed n min⁻¹	Operating point	Current I A	Input power P_{sys} W	Suction side sound power level L_{WA5} dB(A)	Maximum ambient temperature t_R °C
FN080-ZI_.GL._7P3	I	1100	①	5.60	3700		55
			②	4.60	3100	86	
			③	3.30	2200	81	
	II	1060	④	5.60	3700		60
			⑤	4.20	2700	84	
			⑥	2.90	1950	80	
	III	930	⑦	3.80	2500		
			⑧	2.80	1800	81	
			⑨	2.00	1300	76	
	IV	800	⑩	2.40	1600		
			⑪	1.80	1150	77	
			⑫	1.35	840	73	
	V	670	⑬	1.50	940		
			⑭	1.15	680	73	
			⑮	0.90	500	70	
	VI	440	⑯	0.64	280		
			⑰	0.52	220	61	
			⑱	0.44	160	60	

Current values determined at 400V

Fan ordering information

Airflow direction A | **Airflow direction V**

Design	D (without guard grille)	Q (without guard grille)	Q (guard grille suction side)	S (guard grille pressure side)	I (guard grille pressure side)	Q (guard grille pressure side)
		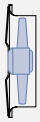				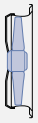
Type **Article no.**	**FN080-ZID.GL.A7P3** **154807**	**FN080-ZIQ.GL.A7P3** **154811**	**FN080-ZIQ.GL.A7P3** **154815**	**FN080-ZIS.GL.V7P3** **154934**	**FN080-ZII.GL.V7P3** **154942**	**FN080-ZIQ.GL.V7P3** **154946**
Weight kg	35.30	50.10	53.90	37.50	36.80	51.90

Control technology

Control modules	Add-on modules	Operating terminal
		
Page 452	Page 463	Page 472

Airflow direction V

Design S - radially bolted, mounted for short bell mouth, guard grille pressure side

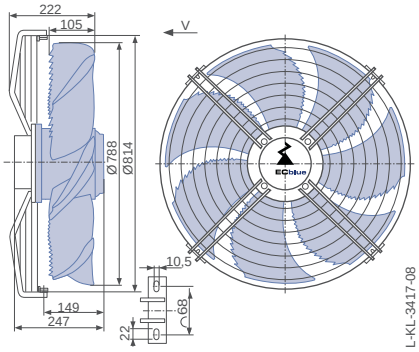

Design I - axial bolted, mounting for bell mouth flange, guard grille pressure side

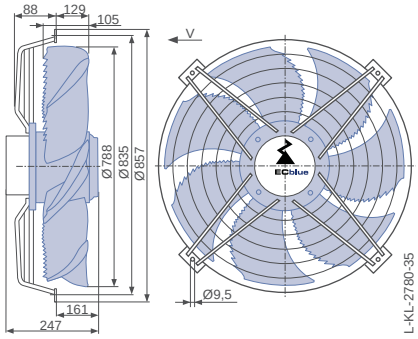

Design Q - square full bell mouth, guard grille pressure side

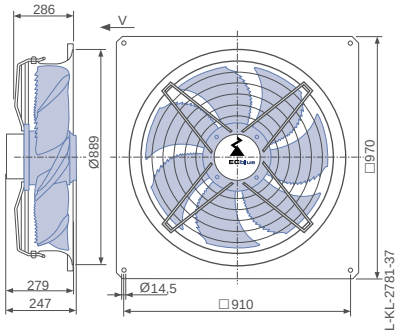

FE2owlet-EC blue

for single phase alternating current, 200-277 V

FN091



Description

Motor technology: EC
Rated voltage U_N: **1~ 200-277 V***
Rated frequency f_N: **50/60 Hz***
Input power P_{sys}: **400 W***
Rated current I_N: **2.20- 1.60 A***
Rated speed n_N: **480 min^{-1}***
Thermal class: **THCL155***
Min. permitted ambient temperature $t_{R(min)}$: -35 °C
Max. permitted ambient temperature $t_{R(max)}$: 60 °C
Electrical connection: integrated Controller
Number of blades: 4
Protection class: IP54
Motor protection: Integrated active temperature management
Blades: High Performance Composite Material, uncoated, black
Rotor: Steel, 2 coat paint, ultramarine blue
Conformity: ErP 2015, CE, UL
ErP-data
Efficiency η_{statA}: 46.5 %
Efficiency: N_{actual} = 55.4 / N_{target} = 40**
EC controller integrated
* Rated data
**ErP 2015

Characteristic curve

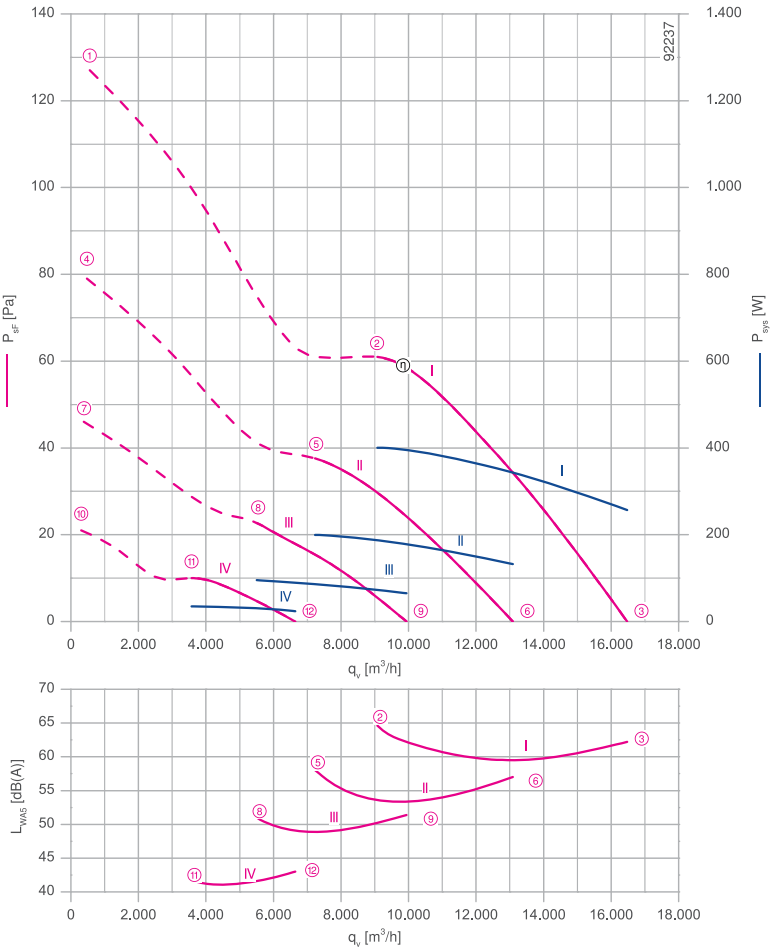

Measured in full bell mouth without guard grille in installation type A according to ISO 5801

Connection diagram Page 530
1360-403

System components Page 430

Dimensions mm

Airflow direction A

Design D - axial bolted, suspension for full bell mouth, guard grille suction side

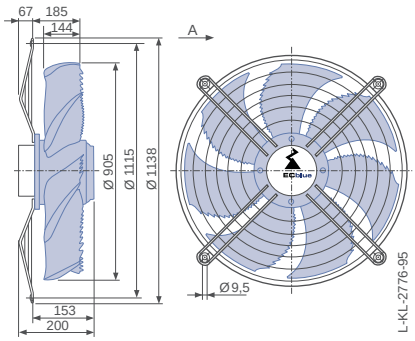

Design Q - square full bell mouth, guard grille suction side

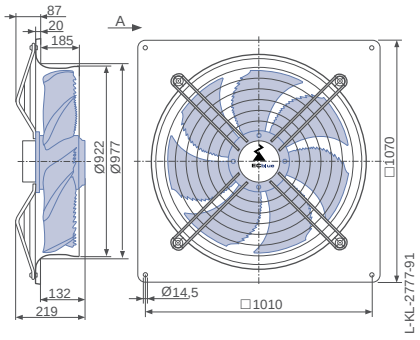

Airflow direction V

Design S - radially bolted, mounted for short bell mouth, guard grille pressure side

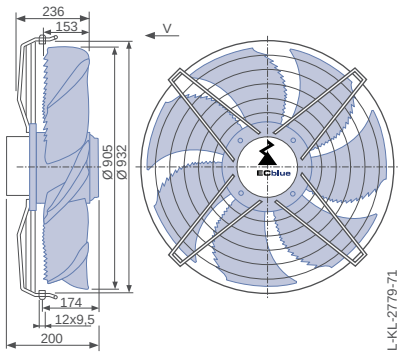

Performance data

Type	Characteristic curve	Speed n min⁻¹	Operating point	Current I A	Input power P_{sys} W	Suction side sound power level L_{WA5} dB(A)
FN091-ZI_.DG._4P3	I	480	①	3.00	640	
			②	1.90	400	65
			③	1.15	260	62
	II	380	④	1.45	310	
			⑤	0.90	200	58
			⑥	0.62	130	57
	III	290	⑦	0.66	140	
			⑧	0.48	95	51
			⑨	0.37	65	51
	IV	190	⑩	0.31	48	
			⑪	0.25	34	42
			⑫	0.32	24	43

Current values determined at 230V

Fan ordering information

Airflow direction A			Airflow direction V	
Design	D (guard grille suction side)	Q (guard grille suction side)	S (guard grille pressure side)	I (guard grille pressure side)	Q (guard grille pressure side)
		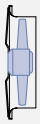			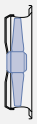
Type	**FN091-ZID.DG.A4P3**	**FN091-ZIQ.DG.A4P3**	**FN091-ZIS.DG.V4P3**	**FN091-ZII.DG.V4P3**	**FN091-ZIQ.DG.V4P3**
Article no.	**159819**	**159821**	**159815**	**159811**	**159813**
Weight kg	19.50	36.00	19.90	19.90	36.50

Control technology

Control modules	Add-on modules	Operating terminal
		
Page 452	Page 463	Page 472

Design I - axial bolted, mounting for bell mouth flange, guard grille pressure side

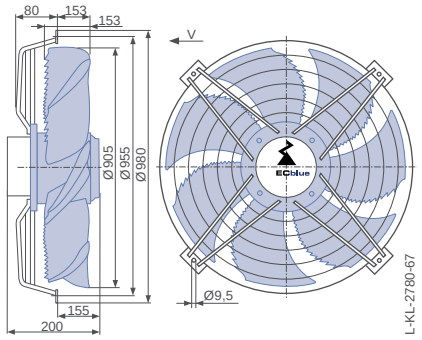

Design Q - square full bell mouth, guard grille pressure side

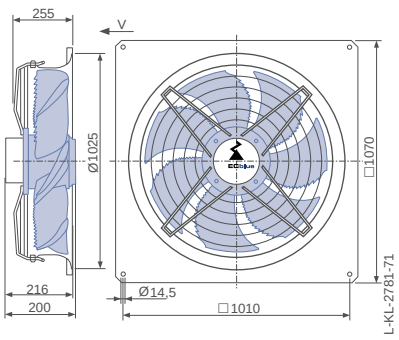

FE2owlet-EC blue

for three phase alternating current, 200-240 V

FN091



Description

Motor technology: EC
Rated voltage U_N: **3~ 200-240 V***
Rated frequency f_N: **50/60 Hz***
Input power P_{sys}: **0.69 kW***
Rated current I_N: **2.10- 1.75 A***
Rated speed n_N: **570 min^{-1}***
Thermal class: **THCL155***
Min. permitted ambient temperature $t_{R(min)}$: -35 °C
Max. permitted ambient temperature $t_{R(max)}$: 60 °C
Electrical connection: integrated Controller
Number of blades: 4
Protection class: IP54
Motor protection: Integrated active temperature management
Blades: High Performance Composite Material, uncoated, black
Rotor: Steel, 2 coat paint, ultramarine blue
Conformity: ErP 2015, CE, UL
ErP-data
Efficiency η_{statA}: 46.4 %
Efficiency: N_{actual} = 54.0 / N_{target} = 40**
EC controller integrated
* Rated data
**ErP 2015

Characteristic curve

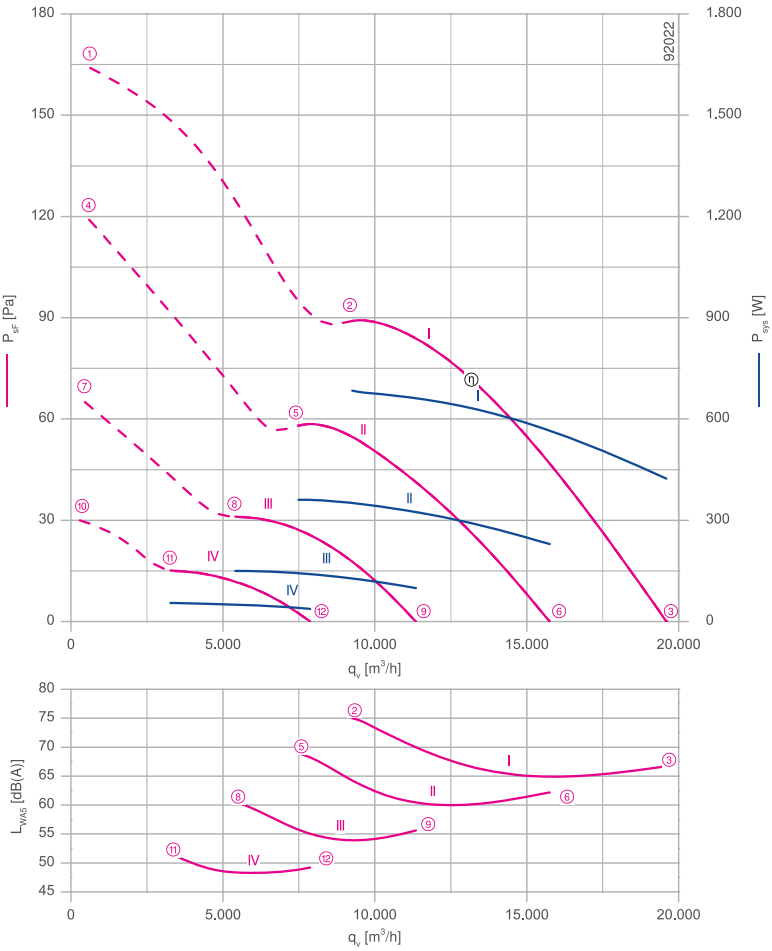

Measured in full bell mouth without guard grille in installation type A according to ISO 5801

Connection diagram Page 530
1360-403

System components Page 430

Dimensions mm

Airflow direction A

Design D - axial bolted, suspension for full bell mouth, guard grille suction side

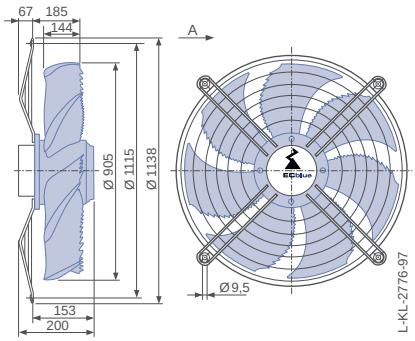

Design Q - square full bell mouth, guard grille suction side

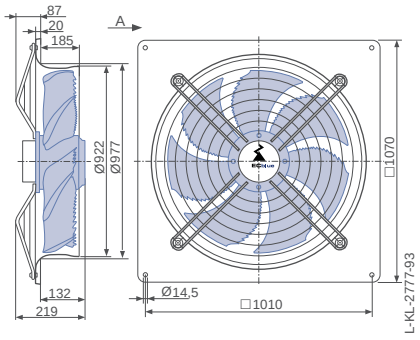

Airflow direction V

Design S - radially bolted, mounted for short bell mouth, guard grille pressure side

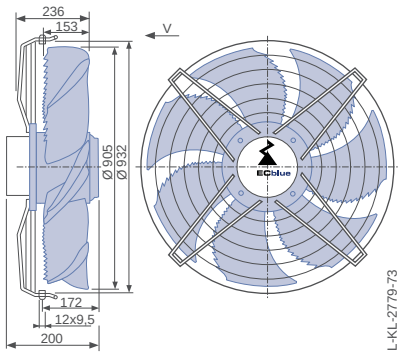

Performance data

Type	Characteristic curve	Speed n min⁻¹	Operating point	Current I A	Input power P_{sys} W	Suction side sound power level L_{WA5} dB(A)
FN091-ZI_.DG._4P3	I	570	①	2.50	940	
			②	1.85	680	75
			③	1.15	420	67
	II	460	④	1.55	560	
			⑤	1.00	360	69
			⑥	0.68	230	62
	III	340	⑦	0.68	230	
			⑧	0.52	150	60
			⑨	0.37	100	56
	IV	230	⑩	0.31	75	
			⑪	0.24	55	50
			⑫	0.18	38	49

Current values determined at 230V

Fan ordering information

Airflow direction A			Airflow direction V	
Design	D (guard grille suction side)	Q (guard grille suction side)	S (guard grille pressure side)	I (guard grille pressure side)	Q (guard grille pressure side)
		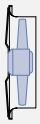			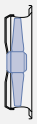
Type	**FN091-ZID.DG.A4P3**	**FN091-ZIQ.DG.A4P3**	**FN091-ZIS.DG.V4P3**	**FN091-ZII.DG.V4P3**	**FN091-ZIQ.DG.V4P3**
Article no.	**159805**	**159807**	**159801**	**159797**	**159799**
Weight kg	19.50	36.00	19.90	19.90	36.50

Control technology

Control modules	Add-on modules	Operating terminal
		
Page 452	Page 463	Page 472

Design I - axial bolted, mounting for bell mouth flange, guard grille pressure side

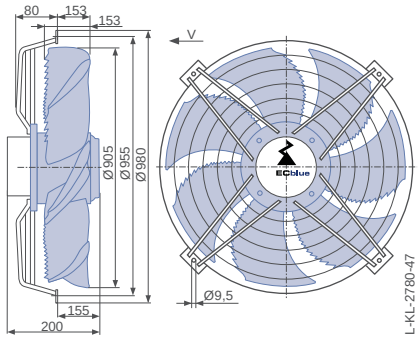

Design Q - square full bell mouth, guard grille pressure side

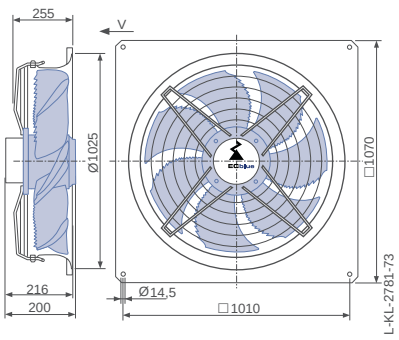

FE2owlet-EC blue

for three phase alternating current, 200-240 V

FN091



Description

Motor technology: EC
Rated voltage U_N: **3~ 200-240 V***
Rated frequency f_N: **50/60 Hz***
Input power P_{sys}: **2.10 kW***
Rated current I_N: **6.40- 5.40 A***
Rated speed n_N: **950 min^{-1}***
Thermal class: **THCL155***
Min. permitted ambient temperature $t_{R(min)}$: -35 °C
Max. permitted ambient temperature $t_{R(max)}$: 55 °C
Electrical connection: integrated Controller
Number of blades: 5
Protection class: IP54
Motor protection: Integrated active temperature management
Blades: Aluminium, uncoated
Rotor: Steel, 2 coat paint, ultramarine blue
Conformity: ErP 2015, CE, UL
ErP-data
Efficiency η_{statA}: 53.6 %
Efficiency: N_{actual} = 58.0 / N_{target} = 40**
EC controller integrated
* Rated data
**ErP 2015

Characteristic curve

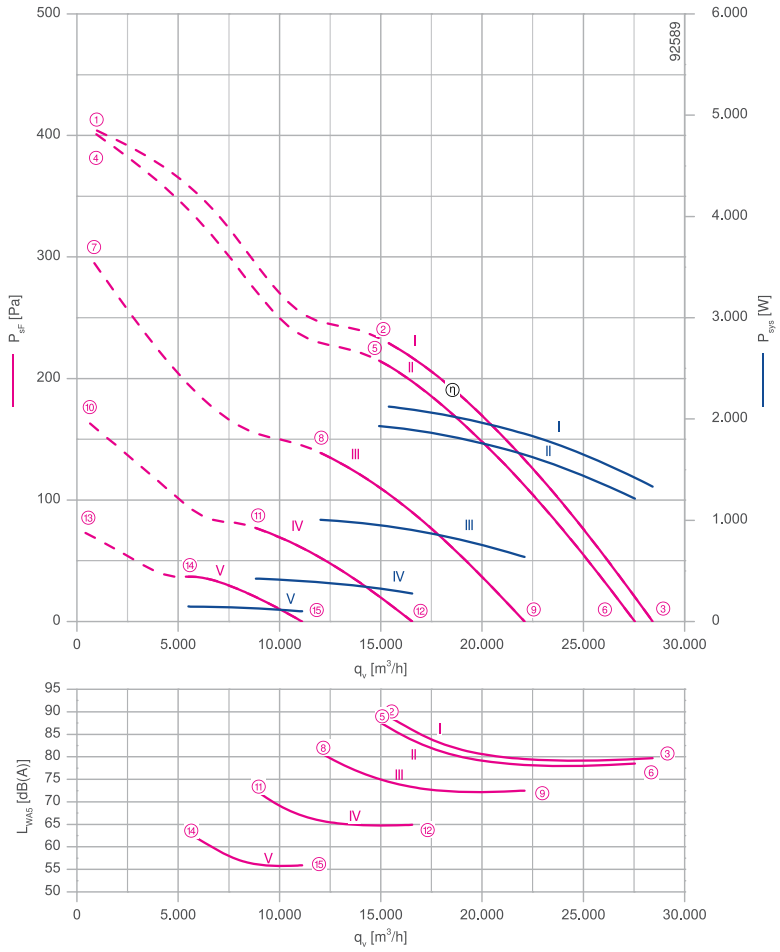

Measured in full bell mouth without guard grille in installation type A according to ISO 5801

Connection diagram Page 530
1360-403

System components Page 430

Dimensions mm

Airflow direction A

Design Q - square full bell mouth, without guard grille

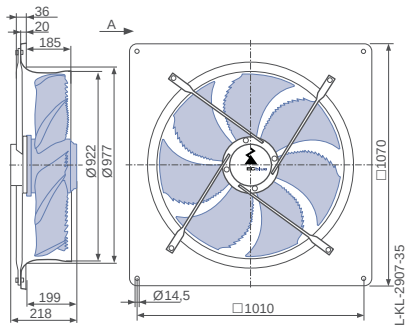

Design Q - square full bell mouth, guard grille suction side

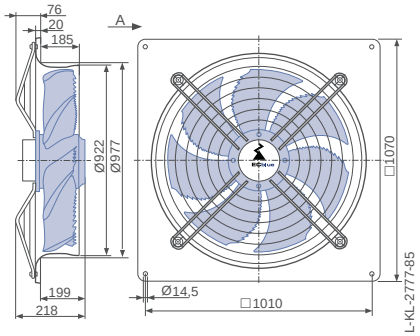

Airflow direction V

Design Q - square full bell mouth, guard grille pressure side

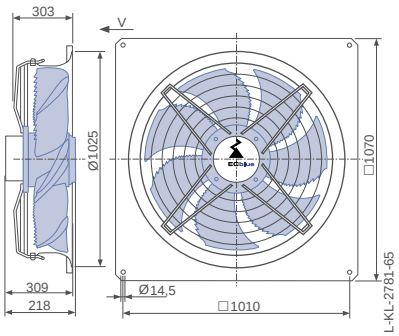

Performance data

Type	Characteristic curve	Speed n min⁻¹	Operating point	Current I A	Input power P_{sys} W	Suction side sound power level L_{WA5} dB(A)	Maximum ambient temperature t_R °C
FN091-ZI_.GG._5P1	I	950	①	8.20	3100		55
			②	5.60	2100	89	
			③	3.50	1350	80	
	II	920	④	8.20	3100		60
			⑤	5.00	1950	88	
			⑥	3.20	1200	79	
	III	740	⑦	4.80	1850		
			⑧	2.70	1000	81	
			⑨	1.70	640	73	
	IV	550	⑩	2.00	740		
			⑪	1.20	420	73	
			⑫	0.82	280	65	
	V	370	⑬	0.74	240		
			⑭	0.52	150	61	
			⑮	0.42	100	56	

Current values determined at 230V

Fan ordering information

Airflow direction A			Airflow direction V
Design	Q (without guard grille)	Q (guard grille suction side)	Q (guard grille pressure side)
		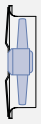	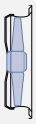
Type	**FN091-ZIQ.GG.A5P1**	**FN091-ZIQ.GG.A5P1**	**FN091-ZIQ.GG.V5P1**
Article no.	**159870**	**159872**	**159864**
Weight kg	47.30	56.10	51.80

Control technology

Control modules	Add-on modules	Operating terminal
		
Page 452	Page 463	Page 472

FE2owlet-EC blue

for three phase alternating current, 200-240 V

FN091



Description

Motor technology: EC
Rated voltage U: **3~ 200-240 V***
Rated frequency f: **50/60 Hz***
Motor input power P_{sys}: **2.80 kW***
Rated current I: **8.60- 7.20 A***
Rated speed n_{max}: **1060 min^{-1}***
Thermal class: **THCL155***
Min. permitted conveyor temperature $t_{R(min)}$: -35 °C
Max. permitted conveyor temperature $t_{R(max)}$: 40 °C
Electrical connection: integrated Controller
Number of blades: 5
Protection class: IP54
Motor protection: Integrated active temperature management
Blades: Aluminium, uncoated
Rotor: Steel, 2 coat paint, Ultramarine blue
Conformity: ErP 2015, CE, UL
ErP Data
Efficiency η_{statA}: 52.7 %
Efficiency: N_{actual} = 56.3 / N_{target} = 40**
EC controller integrated
* Rated data
**ErP 2015

Characteristic curve

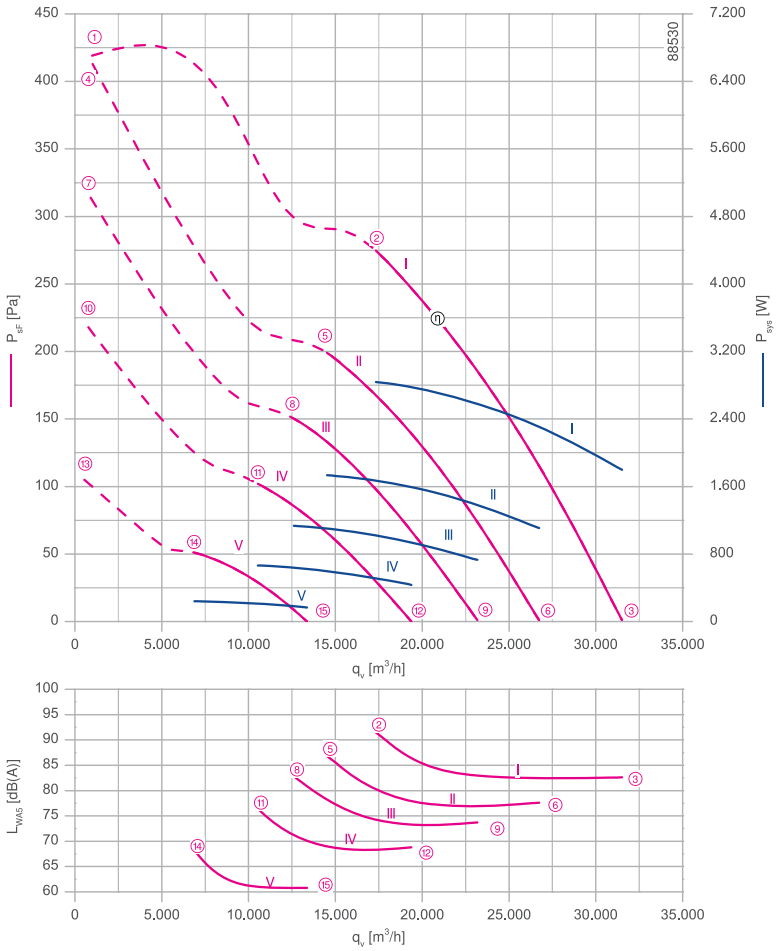

Measured in full bell mouth without guard grille in installation type A according to ISO 5801

Connection diagram Page 530
1360-403

System components Page 430

Dimensions mm

Airflow direction A

Design D - axial bolted, suspension for full bell mouth, without guard grille

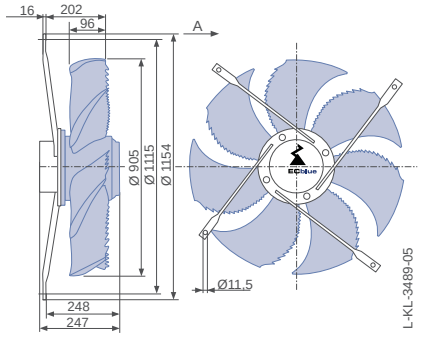

Design Q - square full bell mouth, without guard grille

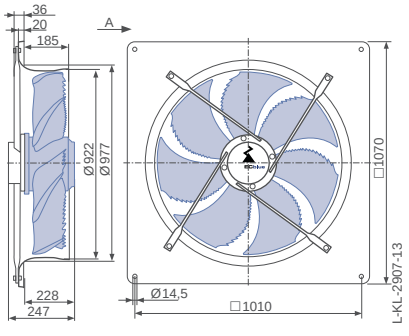

Design Q - square full bell mouth, guard grille suction side

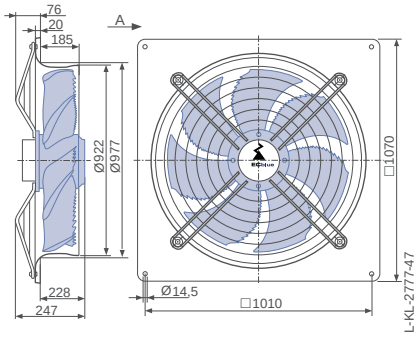

Performance data

Type	Characteristic curve	Speed n min⁻¹	Operating point	Current I A	Input power P_{sys} W	Suction side sound power level L_{WA5} dB(A)	Maximum ambient temperature t_R °C
FN091-ZI_.GL._5P1	I	1060	①	8.40	3200		40
			②	7.60	2800	92	
			③	4.80	1800	83	
	II	900	④	8.20	3100		60
			⑤	4.60	1750	87	
			⑥	2.90	1100	78	
	III	780	⑦	5.40	2000		
			⑧	3.00	1150	83	
			⑨	1.95	740	74	
	IV	650	⑩	3.10	1200		
			⑪	1.80	660	77	
			⑫	1.20	440	69	
	V	450	⑬	1.15	400		
			⑭	0.72	240	67	
			⑮	0.56	170	61	

Current values determined at 230V

Fan ordering information

Airflow direction A

Airflow direction V

Design	D (without guard grille)	Q (without guard grille)	Q (guard grille suction side)	S (guard grille pressure side)	I (guard grille pressure side)	Q (guard grille pressure side)
		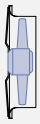	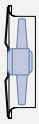			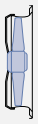
Type **Article no.**	**FN091-ZID.GL.A5P1** **155735**	**FN091-ZIQ.GL.A5P1** **155737**	**FN091-ZIQ.GL.A5P1** **155739**	**FN091-ZIS.GL.V5P1** **155725**	**FN091-ZII.GL.V5P1** **155729**	**FN091-ZIQ.GL.V5P1** **155731**
Weight kg	34.90	51.50	56.10	39.40	38.90	56.00

Control technology

Control modules	Add-on modules	Operating terminal
		
Page 452	Page 463	Page 472

Airflow direction V

Design S - radially bolted, mounted for short bell mouth, guard grille pressure side

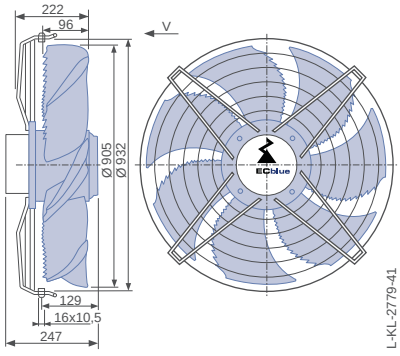

Design I - axial bolted, mounting for bell mouth flange, guard grille pressure side

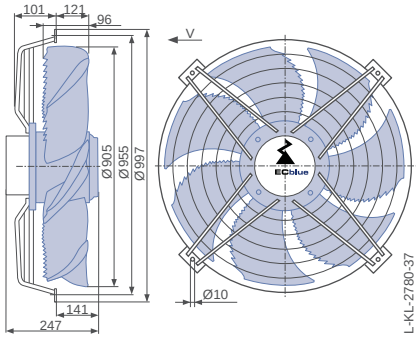

Design Q - square full bell mouth, guard grille pressure side

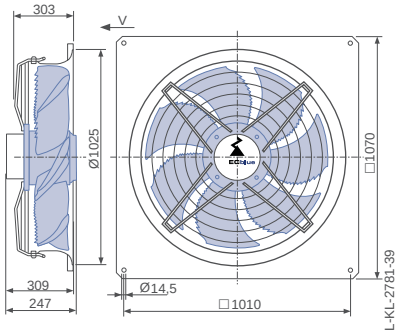

FE2owlet-ECblue

for three phase alternating current, 380-480 V

FN091



Description

Motor technology: EC
Rated voltage U_N: **3~ 380-480 V***
Rated frequency f_N: **50/60 Hz***
Input power P_{sys}: **0.68 kW***
Rated current I_N: **1.28- 0.98 A***
Rated speed n_N: **570 min^{-1}***
Thermal class: **THCL155***
Min. permitted ambient temperature $t_{R(min)}$: -35 °C
Max. permitted ambient temperature $t_{R(max)}$: 60 °C
Electrical connection: integrated Controller
Number of blades: 4
Protection class: IP54
Motor protection: Integrated active temperature management
Blades: High Performance Composite Material, uncoated, black
Rotor: Steel, 2 coat paint, ultramarine blue
Conformity: ErP 2015, CE, UL
ErP-data
Efficiency η_{statA}: 46.3 %
Efficiency: N_{actual} = 53.7 / N_{target} = 40**
EC controller integrated
* Rated data
**ErP 2015

Characteristic curve

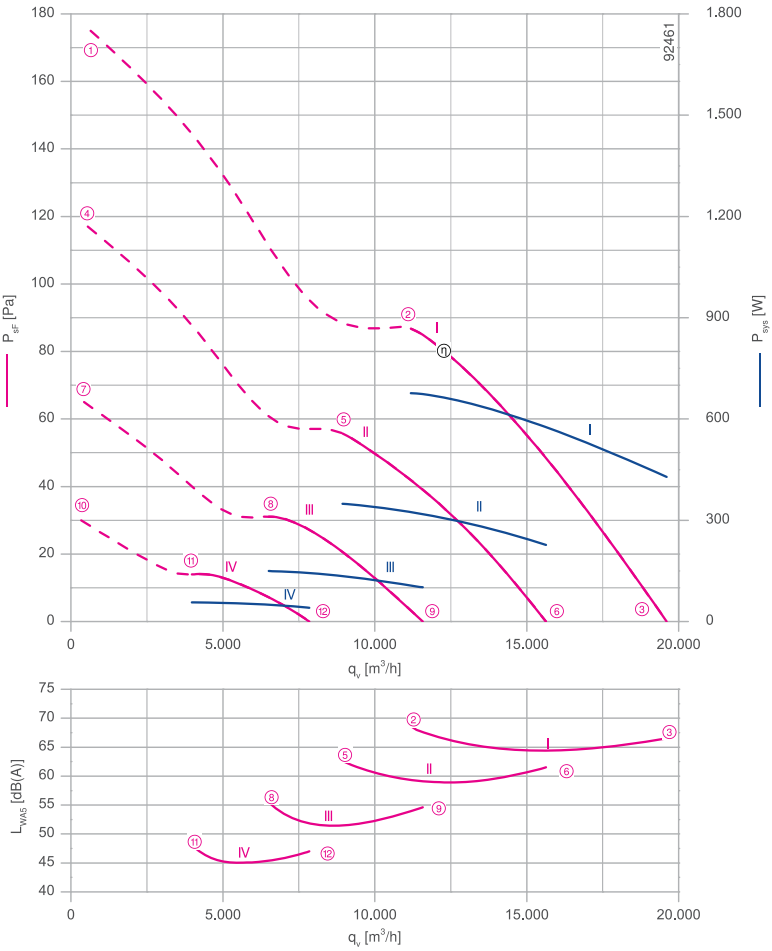

Measured in full bell mouth without guard grille in installation type A according to ISO 5801

Connection diagram Page 530
1360-403

System components Page 430

Dimensions mm

Airflow direction A

Design D - axial bolted, suspension for full bell mouth, guard grille suction side

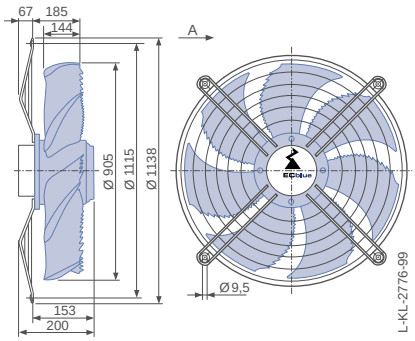

Design Q - square full bell mouth, guard grille suction side

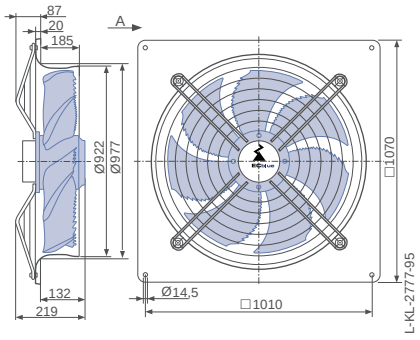

Airflow direction V

Design S - radially bolted, mounted for short bell mouth, guard grille pressure side

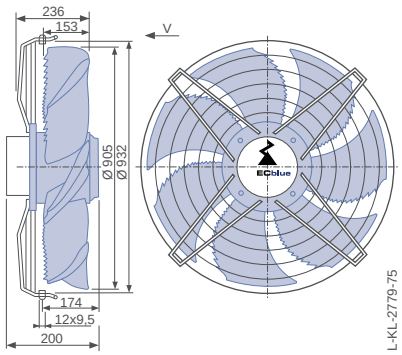

Performance data

Type	Characteristic curve	Speed n min⁻¹	Operating point	Current I A	Input power P_{sys} W	Suction side sound power level L_{WA5} dB(A)
FN091-ZI_.DG._4P3	I	570	①	1.70	1050	
			②	1.15	680	69
			③	0.82	420	67
	II	460	④	1.00	540	
			⑤	0.72	350	63
			⑥	0.52	230	62
	III	340	⑦	0.52	230	
			⑧	0.38	150	55
			⑨	0.29	100	55
	IV	230	⑩	0.23	80	
			⑪	0.19	55	46
			⑫	0.17	42	47

Current values determined at 400V

Fan ordering information

Airflow direction A			Airflow direction V	
Design	D (guard grille suction side)	Q (guard grille suction side)	S (guard grille pressure side)	I (guard grille pressure side)	Q (guard grille pressure side)
		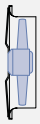			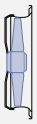
Type	**FN091-ZID.DG.A4P3**	**FN091-ZIQ.DG.A4P3**	**FN091-ZIS.DG.V4P3**	**FN091-ZII.DG.V4P3**	**FN091-ZIQ.DG.V4P3**
Article no.	**159791**	**159793**	**159787**	**159783**	**159785**
Weight kg	19.50	36.00	19.90	19.90	36.50

Control technology

Control modules	Add-on modules	Operating terminal
		
Page 452	Page 463	Page 472

Design I - axial bolted, mounting for bell mouth flange, guard grille pressure side

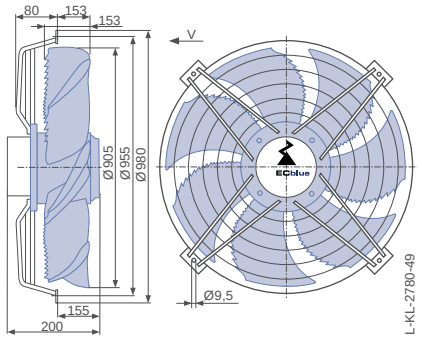

Design Q - square full bell mouth, guard grille pressure side

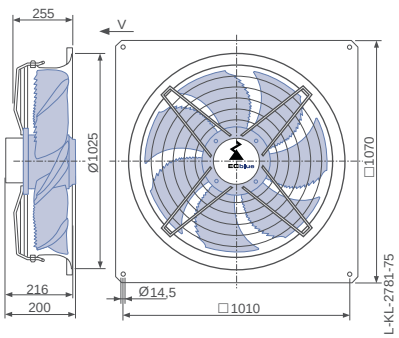

FE2owlet-ECblue

for three phase alternating current, 380-480 V

FN091



Description

Motor technology: EC
Rated voltage U_N: **3~ 380-480 V***
Rated frequency f_N: **50/60 Hz***
Input power P_{sys}: **1.95 kW***
Rated current I_N: **3.20- 2.50 A***
Rated speed n_N: **930 min^{-1}***
Thermal class: **THCL155***
Min. permitted ambient temperature $t_{R(min)}$: -35 °C
Max. permitted ambient temperature $t_{R(max)}$: 60 °C
Electrical connection: integrated Controller
Number of blades: 5
Protection class: IP54
Motor protection: Integrated active temperature management
Blades: Aluminium, uncoated
Rotor: Steel, 2 coat paint, ultramarine blue
Conformity: ErP 2015, CE, UL
ErP-data
Efficiency η_{statA}: 53.8 %
Efficiency: N_{actual} = 58.4 / N_{target} = 40**
EC controller integrated
* Rated data
**ErP 2015

Characteristic curve

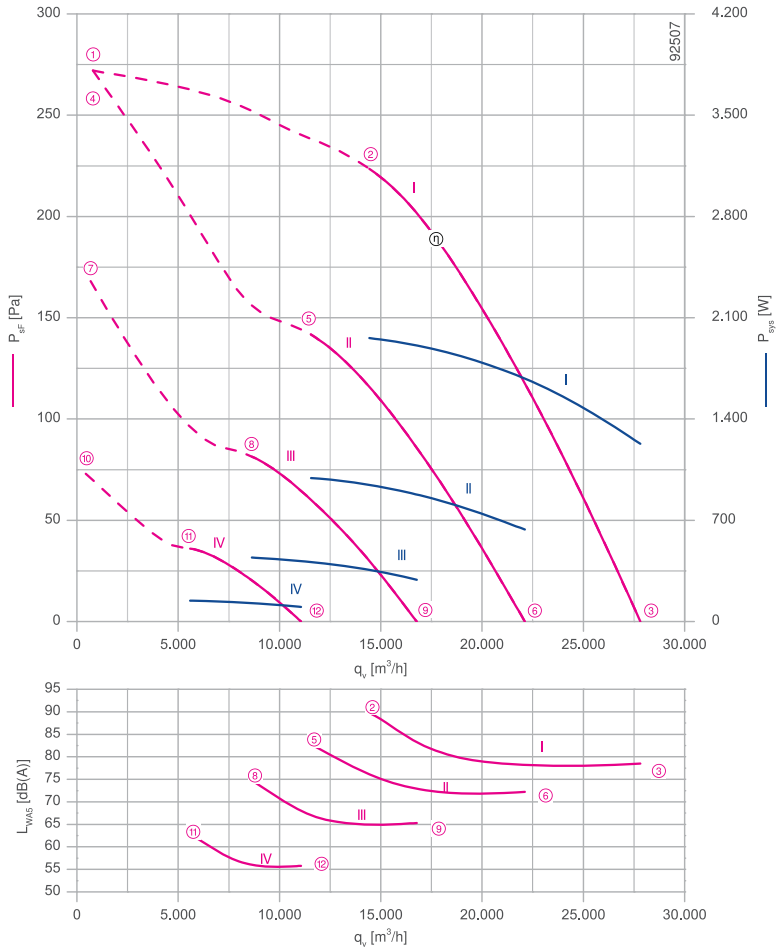

Measured in full bell mouth without guard grille in installation type A according to ISO 5801

Connection diagram Page 530
1360-403

System components Page 430

Dimensions mm

Airflow direction A

Design Q - square full bell mouth, without guard grille

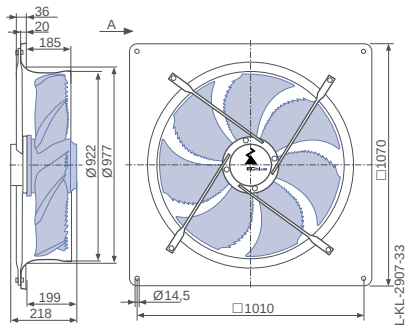

Design Q - square full bell mouth, guard grille suction side

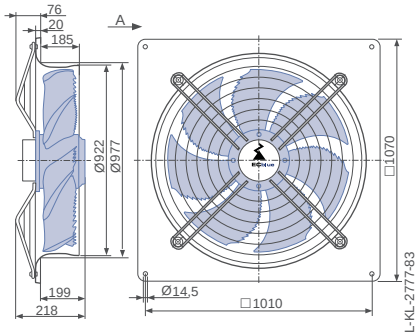

Airflow direction V

Design Q - square full bell mouth, guard grille pressure side

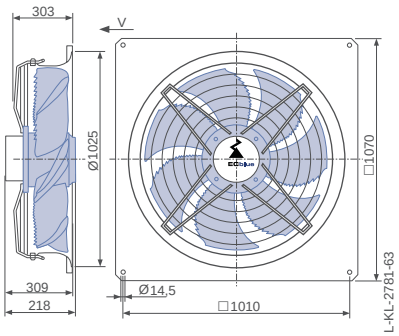

Performance data

Type	Characteristic curve	Speed n min⁻¹	Operating point	Current I A	Input power P_{sys} W	Suction side sound power level L_{WA5} dB(A)
FN091-ZI_.GG._5P1	I	930	①	2.50	1600	
			②	3.00	1950	90
			③	1.95	1250	79
	II	740	④	2.50	1600	
			⑤	1.60	1000	83
			⑥	1.10	640	72
	III	560	⑦	1.30	780	
			⑧	0.86	440	75
			⑨	0.64	290	65
	IV	370	⑩	0.56	230	
			⑪	0.40	140	62
			⑫	0.32	100	56

Current values determined at 400V

Fan ordering information

Airflow direction A			Airflow direction V
Design	Q (without guard grille)	Q (guard grille suction side)	Q (guard grille pressure side)
		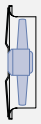	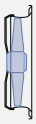
Type	**FN091-ZIQ.GG.A5P1**	**FN091-ZIQ.GG.A5P1**	**FN091-ZIQ.GG.V5P1**
Article no.	**154845**	**154849**	**154833**
Weight kg	47.30	51.90	51.80

Control technology

Control modules	Add-on modules	Operating terminal
		
Page 452	Page 463	Page 472

FE2owlet-EC blue

for three phase alternating current, 380-480 V

FN091



Characteristic curve

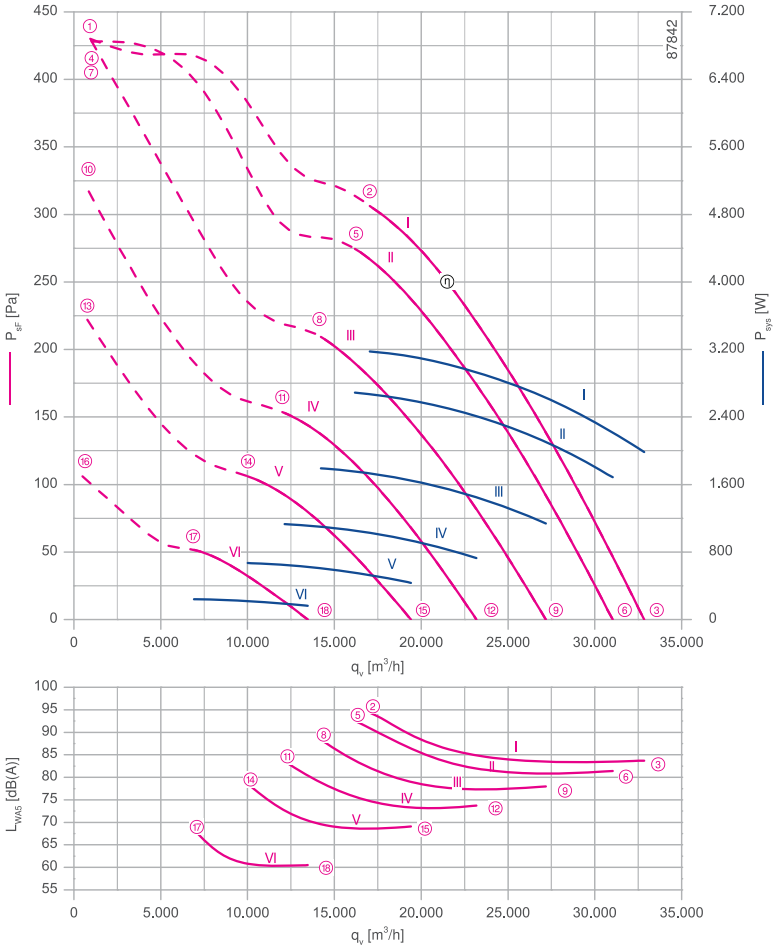

Measured in full bell mouth without guard grille in installation type A according to ISO 5801

Description

Motor technology: EC
Rated voltage U_N: **3~ 380-480 V***
Rated frequency f_N: **50/60 Hz***
Input power P_{sys}: **3.20 kW***
Rated current I_N: **5.00- 3.90 A***
Rated speed n_N: **1100 min^{-1}***
Thermal class: **THCL155***
Min. permitted ambient temperature $t_{R(min)}$: -35 °C
Max. permitted ambient temperature $t_{R(max)}$: 50 °C
Electrical connection: integrated Controller
Number of blades: 5
Protection class: IP54
Motor protection: Integrated active temperature management
Blades: Aluminium, uncoated
Rotor: Steel, 2 coat paint, ultramarine blue
Conformity: ErP 2015, CE, UL
ErP-data
Efficiency η_{statA}: 53.2 %
Efficiency: N_{actual} = 56.5 / N_{target} = 40**
EC controller integrated
* Rated data
**ErP 2015

Connection diagram Page 530
1360-403

System components Page 430

Dimensions mm

Airflow direction A

Design D - axial bolted, suspension for full bell mouth, without guard grille

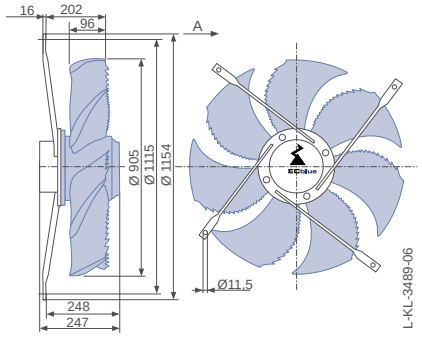

Design Q - square full bell mouth, without guard grille

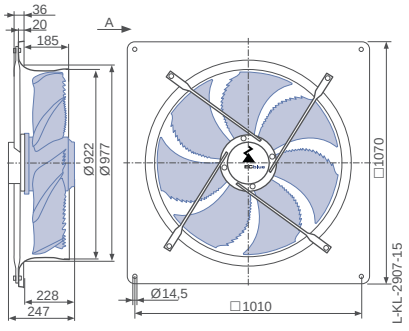

Design Q - square full bell mouth, guard grille suction side

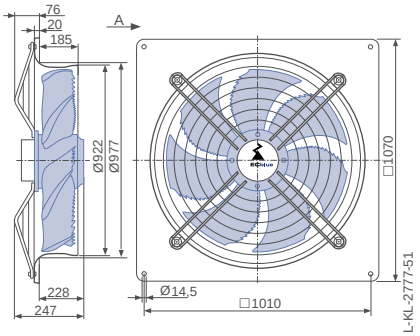

Performance data

Type	Characteristic curve	Speed n min⁻¹	Operating point	Current I A	Input power P_{sys} W	Suction side sound power level L_{WA5} dB(A)	Maximum ambient temperature t_R °C
FN091-ZI_.GL._5P1	I	1100	①	5.00	3300		50
			②	4.80	3200	95	
			③	3.00	2000	84	
	II	1040	④	5.00	3300		60
			⑤	4.00	2700	93	
			⑥	2.60	1700	81	
	III	910	⑦	5.00	3300		
			⑧	2.80	1800	89	
			⑨	1.80	1150	78	
	IV	780	⑩	3.10	2000		
			⑪	1.80	1150	84	
			⑫	1.20	720	74	
	V	650	⑬	1.85	1200		
			⑭	1.15	660	78	
			⑮	0.82	440	69	
	VI	450	⑯	0.78	400		
			⑰	0.58	240	68	
			⑱	0.44	160	61	

Current values determined at 400V

Fan ordering information

Airflow direction A | **Airflow direction V**

Design	D (without guard grille)	Q (without guard grille)	Q (guard grille suction side)	S (guard grille pressure side)	I (guard grille pressure side)	Q (guard grille pressure side)
		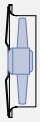				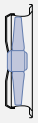
Type	**FN091-ZID.GL.A5P1**	**FN091-ZIQ.GL.A5P1**	**FN091-ZIQ.GL.A5P1**	**FN091-ZIS.GL.V5P1**	**FN091-ZII.GL.V5P1**	**FN091-ZIQ.GL.V5P1**
Article no.	**154843**	**154847**	**154851**	**154823**	**154831**	**154835**
Weight kg	34.90	51.50	56.10	39.40	38.90	56.00

Control technology

Control modules	Add-on modules	Operating terminal
		
Page 452	Page 463	Page 472

Airflow direction V

Design S - radially bolted, mounted for short bell mouth, guard grille pressure side

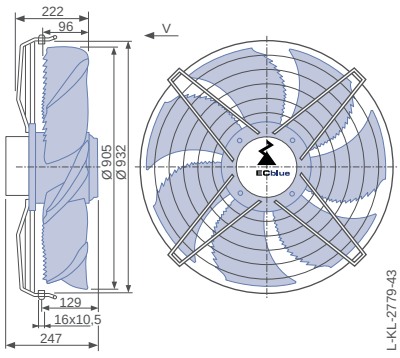

Design I - axial bolted, mounting for bell mouth flange, guard grille pressure side

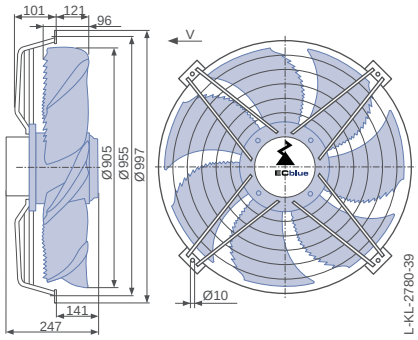

Design Q - square full bell mouth, guard grille pressure side

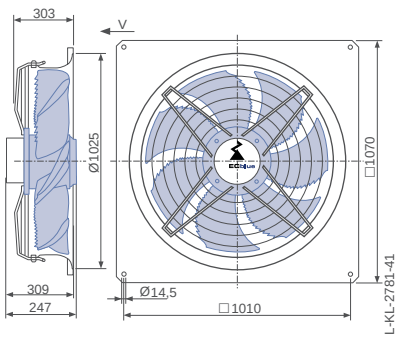

FE2owlet-EC blue

for three phase alternating current, 200-240 V

FN100



Description

Motor technology: EC
Rated voltage U_N: **3~ 200-240 V***
Rated frequency f_N: **50/60 Hz***
Input power P_{sys}: **1.40 kW***
Rated current I_N: **4.30- 3.60 A***
Rated speed n_N: **700 min^{-1}***
Thermal class: **THCL155***
Min. permitted ambient temperature $t_{R(min)}$: -35 °C
Max. permitted ambient temperature $t_{R(max)}$: 60 °C
Electrical connection: integrated Controller
Number of blades: 5
Protection class: IP54
Motor protection: Integrated active temperature management
Blades: Aluminium, uncoated
Rotor: Steel, 2 coat paint, ultramarine blue
Conformity: ErP 2015, CE, UL
ErP-data
Efficiency η_{statA}: 49.7 %
Efficiency: N_{actual} = 55.2 / N_{target} = 40**
EC controller integrated
* Rated data
**ErP 2015

Characteristic curve

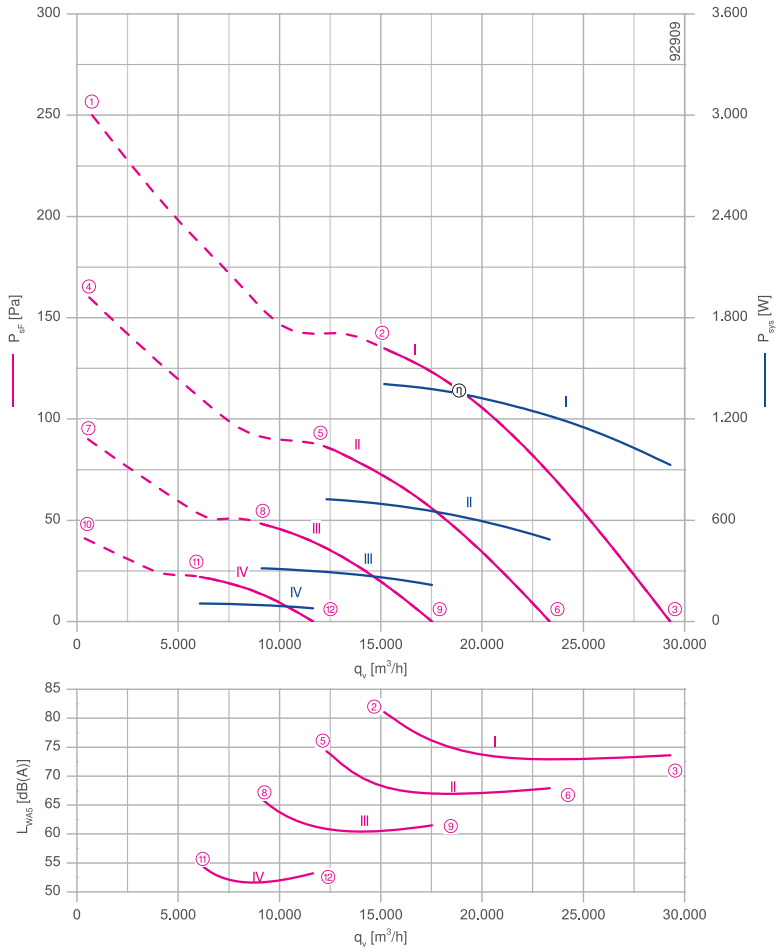

Measured in full bell mouth without guard grille in installation type A according to ISO 5801

Connection diagram Page 530
1360-403

System components Page 430

Dimensions mm

Airflow direction A

Design Q - square full bell mouth, without guard grille

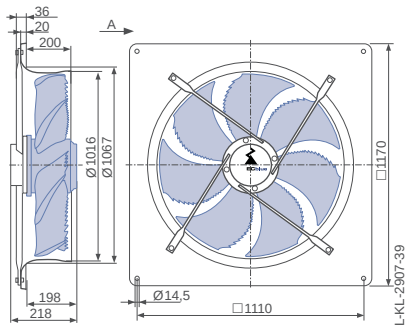

Design Q - square full bell mouth, guard grille suction side

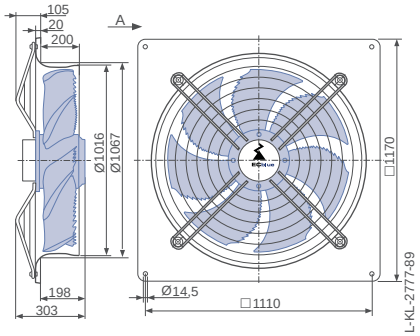

Airflow direction V

Design Q - square full bell mouth, guard grille pressure side

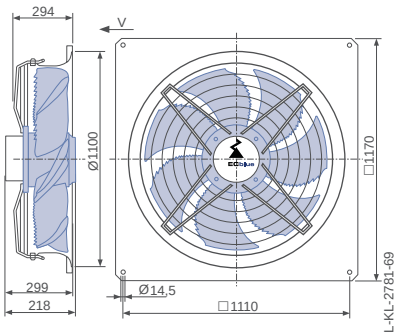

Performance data

Type	Characteristic curve	Speed n min⁻¹	Operating point	Current I A	Input power P_{sys} W	Suction side sound power level L_{WA5} dB(A)
FN100-ZI_.GG._5P1	I	700	①	5.80	2200	
			②	3.70	1400	81
			③	2.50	920	74
	II	560	④	2.90	1100	
			⑤	1.95	720	75
			⑥	1.35	480	68
	III	420	⑦	1.30	480	
			⑧	0.90	320	66
			⑨	0.68	220	62
	IV	280	⑩	0.54	150	
			⑪	0.44	110	55
			⑫	0.36	80	53

Current values determined at 230V

Fan ordering information

Airflow direction A			Airflow direction V
Design	Q (without guard grille)	Q (guard grille suction side)	Q (guard grille pressure side)
		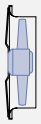	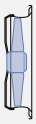
Type	**FN100-ZIQ.GG.A5P1**	**FN100-ZIQ.GG.A5P1**	**FN100-ZIQ.GG.V5P1**
Article no.	**159886**	**159888**	**159880**
Weight kg	51.90	56.60	56.50

Control technology

Control modules	Add-on modules	Operating terminal
		
Page 452	Page 463	Page 472

FE2owlet-ECblue

for three phase alternating current, 200-240 V

FN100



Description

Motor technology: EC
Rated voltage U: **3~ 200-240 V***
Rated frequency f: **50/60 Hz***
Motor input power P_{sys}: **2.60 kW***
Rated current I: **7.90- 6.60 A***
Rated speed n_{max}: **850 min^{-1}***
Thermal class: **THCL155***
Min. permitted conveyor temperature $t_{R(min)}$: -35 °C
Max. permitted conveyor temperature $t_{R(max)}$: 40 °C
Electrical connection: integrated Controller
Number of blades: 5
Protection class: IP54
Motor protection: Integrated active temperature management
Blades: Aluminium, uncoated
Rotor: Steel, 2 coat paint, Ultramarine blue
Conformity: ErP 2015, CE, UL
ErP Data
Efficiency η_{statA}: 47.6 %
Efficiency: N_{actual} = 51.5 / N_{target} = 40**
EC controller integrated
* Rated data
**ErP 2015

Characteristic curve

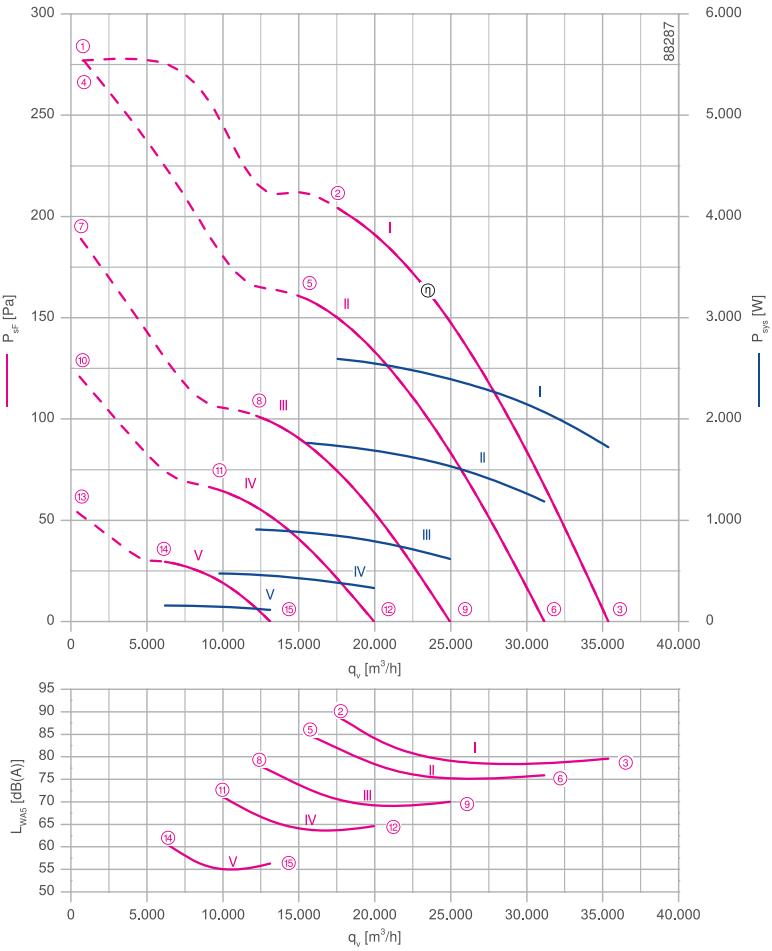

Measured in full bell mouth without guard grille in installation type A according to ISO 5801

Connection diagram Page 530
1360-403

System components Page 430

Dimensions mm

Airflow direction A

Design D - axial bolted, suspension for full bell mouth, without guard grille

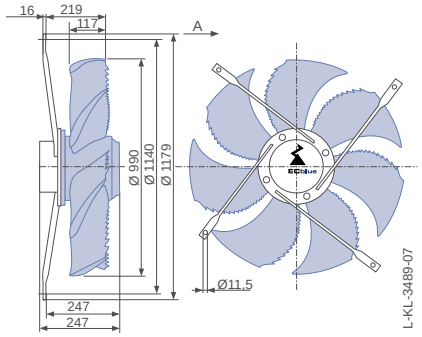

Design Q - square full bell mouth, without guard grille

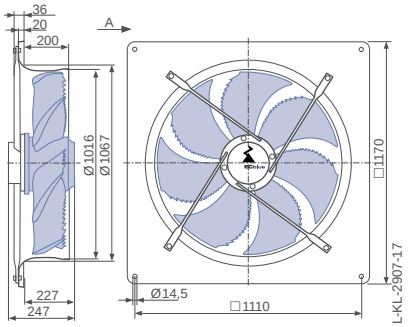

Design Q - square full bell mouth, guard grille suction side

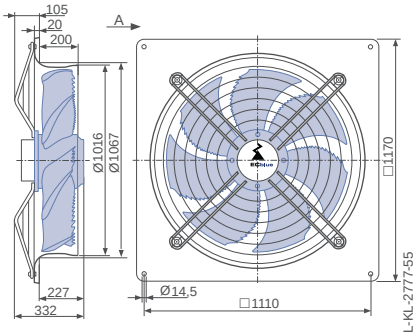

Performance data

Type	Characteristic curve	Speed n min⁻¹	Operating point	Current I A	Input power P_{sys} W	Suction side sound power level L_{WA5} dB(A)	Maximum ambient temperature t_R °C
FN100-ZI_.GL._5P1	I	850	①	6.60	2500		40
			②	6.80	2600	89	
			③	4.60	1700	80	
	II	750	④	6.60	2500		60
			⑤	4.60	1750	85	
			⑥	3.10	1200	76	
	III	600	⑦	3.70	1400		
			⑧	2.40	900	78	
			⑨	1.65	620	70	
	IV	480	⑩	1.90	720		
			⑪	1.30	480	72	
			⑫	0.94	330	65	
	V	320	⑬	0.70	230		
			⑭	0.54	160	60	
			⑮	0.44	110	56	

Current values determined at 230V

Fan ordering information

Airflow direction A

Airflow direction V

Design	D (without guard grille)	Q (without guard grille)	Q (guard grille suction side)	S (guard grille pressure side)	I (guard grille pressure side)	Q (guard grille pressure side)
		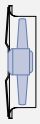	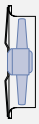			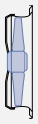
Type **Article no.**	**FN100-ZID.GL.A5P1** **155751**	**FN100-ZIQ.GL.A5P1** **155753**	**FN100-ZIQ.GL.A5P1** **155755**	**FN100-ZIS.GL.V5P1** **155743**	**FN100-ZII.GL.V5P1** **155745**	**FN100-ZIQ.GL.V5P1** **155747**
Weight kg	36.60	56.10	60.60	42.20	41.70	60.90

Control technology

Control modules	Add-on modules	Operating terminal
		
Page 452	Page 463	Page 472

Airflow direction V

Design S - radially bolted, mounted for short bell mouth, guard grille pressure side

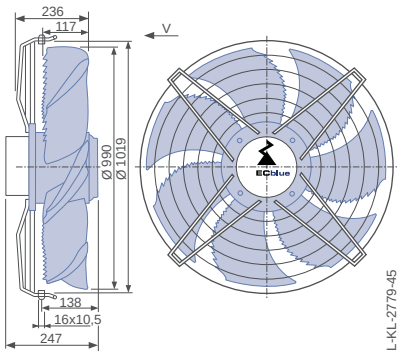

Design I - axial bolted, mounting for bell mouth flange, guard grille pressure side

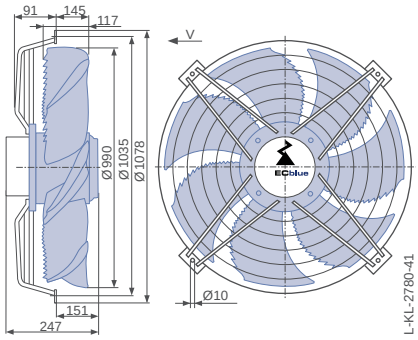

Design Q - square full bell mouth, guard grille pressure side

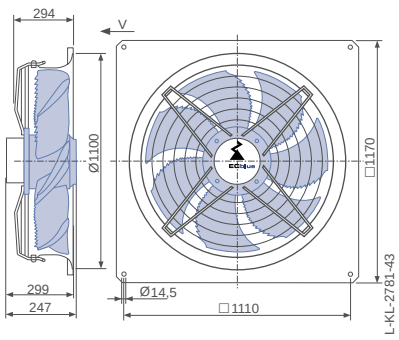

FE2owlet-ECblue

for three phase alternating current, 380-480 V

FN100



Description

Motor technology: EC
Rated voltage U_N: **3~ 380-480 V***
Rated frequency f_N: **50/60 Hz***
Input power P_{sys}: **1.50 kW***
Rated current I_N: **2.60- 2.00 A***
Rated speed n_N: **710 min^{-1}***
Thermal class: **THCL155***
Min. permitted ambient temperature $t_{R(min)}$: -35 °C
Max. permitted ambient temperature $t_{R(max)}$: 60 °C
Electrical connection: integrated Controller
Number of blades: 5
Protection class: IP54
Motor protection: Integrated active temperature management
Blades: Aluminium, uncoated
Rotor: Steel, 2 coat paint, ultramarine blue
Conformity: ErP 2015, CE, UL
ErP-data
Efficiency η_{statA}: 49.9 %
Efficiency: N_{actual} = 55.4 / N_{target} = 40**
EC controller integrated
* Rated data
**ErP 2015

Characteristic curve

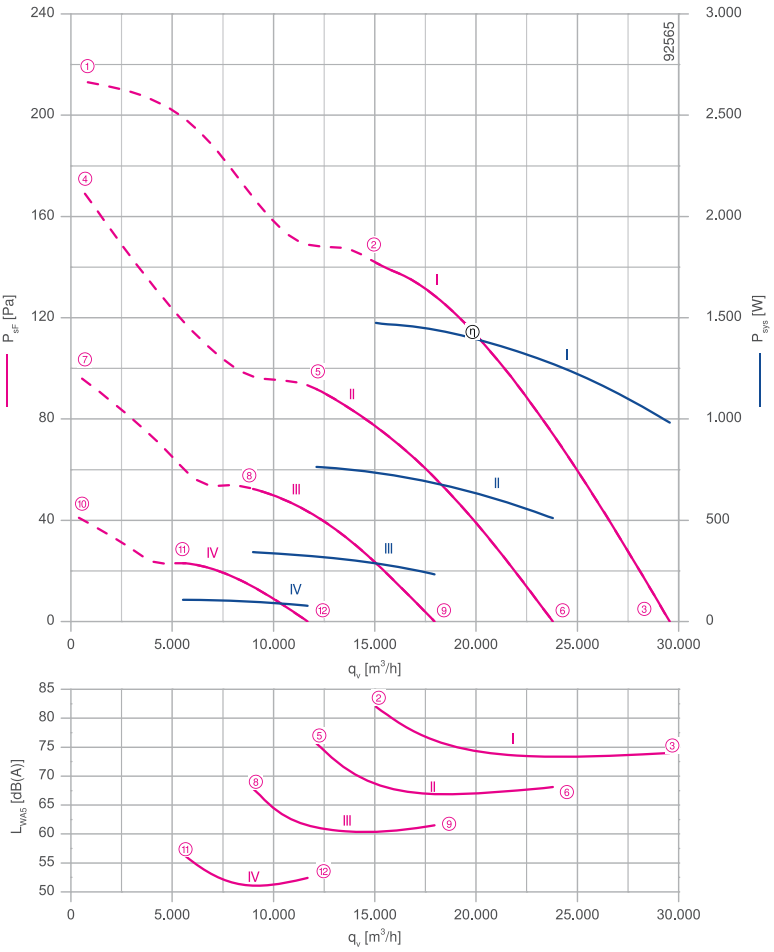

Measured in full bell mouth without guard grille in installation type A according to ISO 5801

Connection diagram Page 530
1360-403

System components Page 430

Dimensions mm

Airflow direction A

Design Q - square full bell mouth, without guard grille

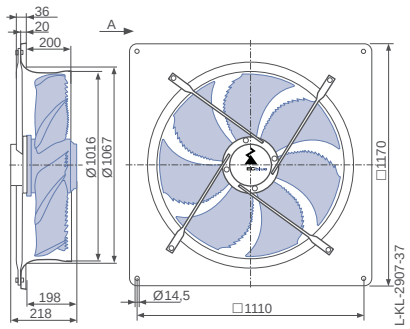

Design Q - square full bell mouth, guard grille suction side

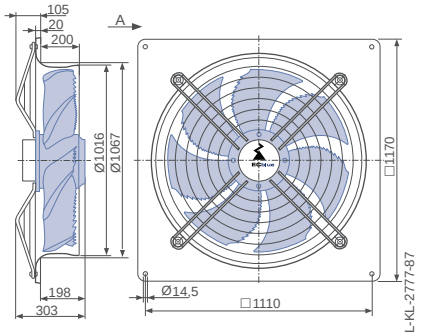

Airflow direction V

Design Q - square full bell mouth, guard grille pressure side

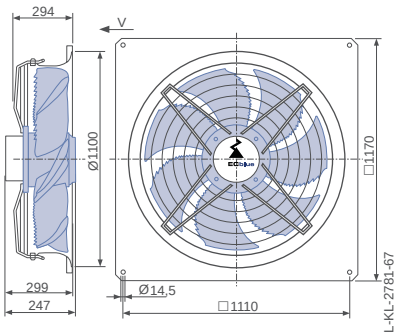

Performance data

Type	Characteristic curve	Speed n min⁻¹	Operating point	Current I A	Input power P_{sys} W	Suction side sound power level L_{WA5} dB(A)
FN100-ZI_.GG._5P1	I	710	①	2.70	1700	
			②	2.40	1500	82
			③	1.65	980	74
	II	570	④	1.95	1150	
			⑤	1.35	760	76
			⑥	0.94	520	68
	III	430	⑦	0.96	500	
			⑧	0.70	340	68
			⑨	0.52	230	62
	IV	280	⑩	0.38	150	
			⑪	0.30	110	55
			⑫	0.25	80	52

Current values determined at 400V

Fan ordering information

Airflow direction A			Airflow direction V
Design	Q (without guard grille)	Q (guard grille suction side)	Q (guard grille pressure side)
		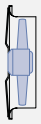	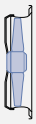
Type	**FN100-ZIQ.GG.A5P1**	**FN100-ZIQ.GG.A5P1**	**FN100-ZIQ.GG.V5P1**
Article no.	**154881**	**154885**	**154869**
Weight kg	51.90	56.40	56.50

Control technology

Control modules	Add-on modules	Operating terminal
		
Page 452	Page 463	Page 472

FE2owlet-EC blue

for three phase alternating current, 380-480 V

FN100



Description

Motor technology: EC
Rated voltage U_N: **3~ 380-480 V***
Rated frequency f_N: **50/60 Hz***
Input power P_{sys}: **2.50 kW***
Rated current I_N: **4.00- 3.20 A***
Rated speed n_N: **850 min^{-1}***
Thermal class: **THCL155***
Min. permitted ambient temperature $t_{R(min)}$: -35 °C
Max. permitted ambient temperature $t_{R(max)}$: 55 °C
Electrical connection: integrated Controller
Number of blades: 5
Protection class: IP54
Motor protection: Integrated active temperature management
Blades: Aluminium, uncoated
Rotor: Steel, 2 coat paint, ultramarine blue
Conformity: ErP 2015, CE, UL
ErP-data
Efficiency η_{statA}: 48.7 %
Efficiency: N_{actual} = 52.7 / N_{target} = 40**
EC controller integrated
* Rated data
**ErP 2015

Characteristic curve

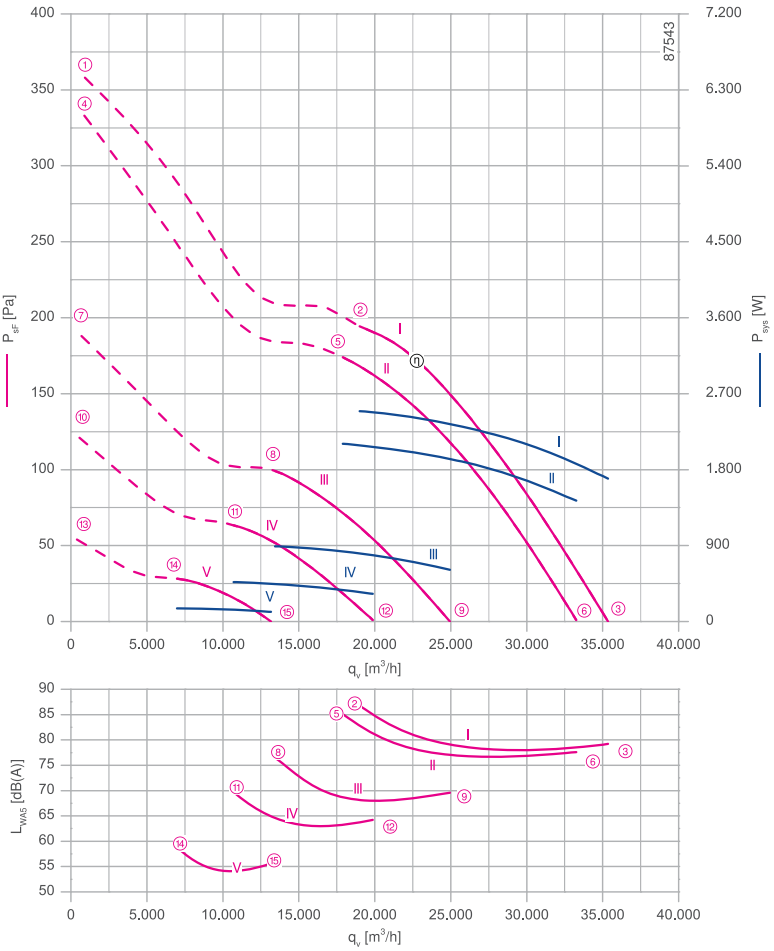

Measured in full bell mouth without guard grille in installation type A according to ISO 5801

Connection diagram Page 530
1360-403

System components Page 430

Dimensions mm

Airflow direction A

Design D - axial bolted, suspension for full bell mouth, without guard grille

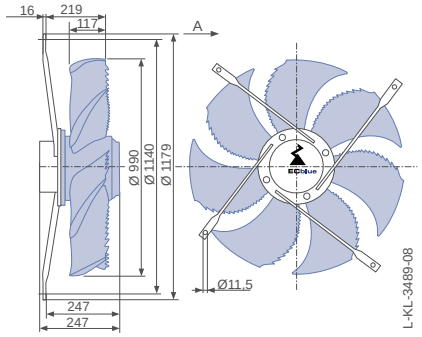

Design Q - square full bell mouth, without guard grille

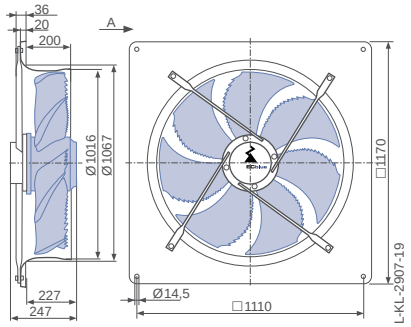

Design Q - square full bell mouth, guard grille suction side

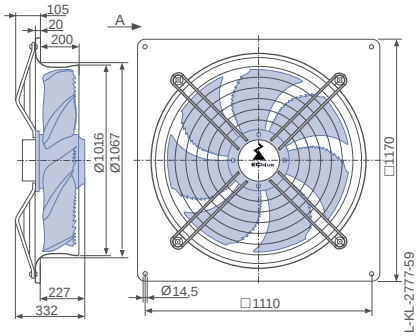

Performance data

Type	Characteristic curve	Speed n min⁻¹	Operating point	Current I A	Input power P_{sys} W	Suction side sound power level L_{WA5} dB(A)	Maximum ambient temperature t_R °C
FN100-ZI_.GL._5P1	I	850	①	5.40	3600		55
			②	3.80	2500	87	
			③	2.60	1700	79	
	II	800	④	5.00	3300		60
			⑤	3.20	2100	86	
			⑥	2.20	1450	78	
	III	600	⑦	2.10	1350		70
			⑧	1.45	900	77	
			⑨	1.05	620	70	
	IV	480	⑩	1.20	700		
			⑪	0.86	460	70	
			⑫	0.68	330	64	
	V	320	⑬	0.54	230		
			⑭	0.42	160	59	
			⑮	0.36	110	56	

Current values determined at 400V

Fan ordering information

Airflow direction A

Airflow direction V

Design	D (without guard grille)	Q (without guard grille)	Q (guard grille suction side)	S (guard grille pressure side)	I (guard grille pressure side)	Q (guard grille pressure side)
		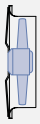	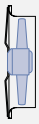			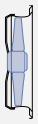
Type **Article no.**	**FN100-ZID.GL.A5P1** **154879**	**FN100-ZIQ.GL.A5P1** **154883**	**FN100-ZIQ.GL.A5P1** **154887**	**FN100-ZIS.GL.V5P1** **154859**	**FN100-ZII.GL.V5P1** **154867**	**FN100-ZIQ.GL.V5P1** **154871**
Weight kg	36.60	56.10	60.70	42.20	41.70	60.90

Control technology

Control modules	Add-on modules	Operating terminal
		
Page 452	Page 463	Page 472

Airflow direction V

Design S - radially bolted, mounted for short bell mouth, guard grille pressure side

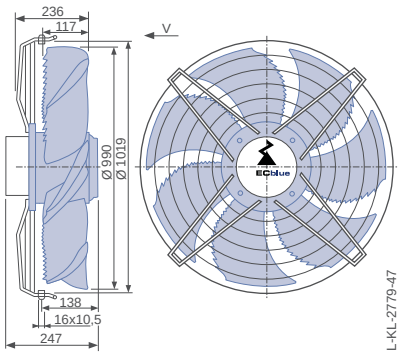

Design I - axial bolted, mounting for bell mouth flange, guard grille pressure side

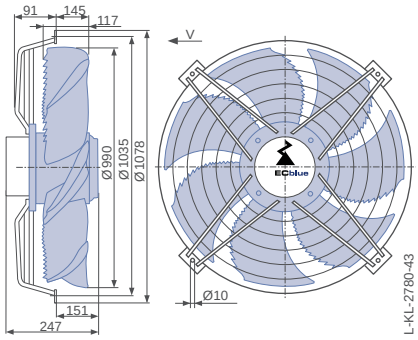

Design Q - square full bell mouth, guard grille pressure side

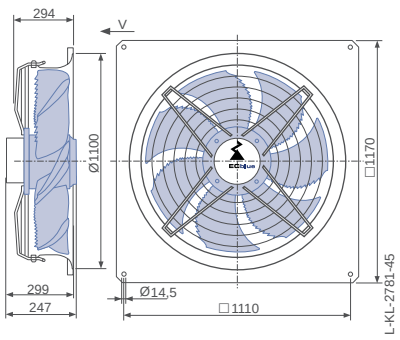

FE2owlet-EC blue

for three phase alternating current, 200-240 V

FN125



Description

Motor technology: EC
Rated voltage U_N: **3~ 200-240 V***
Rated frequency f_N: **50/60 Hz***
Input power P_{sys}: **1.70 kW***
Rated current I_N: **5.20- 4.40 A***
Rated speed n_N: **550 min^{-1}***
Thermal class: **THCL155***
Min. permitted ambient temperature $t_{R(min)}$: -35 °C
Max. permitted ambient temperature $t_{R(max)}$: 60 °C
Electrical connection: integrated Controller
Number of blades: 3
Protection class: IP54
Motor protection: Integrated active temperature management
Blades: Aluminium, uncoated
Rotor: Aluminium, 1 coat paint, ultramarine blue
Conformity: ErP 2015, CE, UL
ErP-data
Efficiency η_{statA}: 49.6 %
Efficiency: N_{actual} = 54.7 / N_{target} = 40**
EC controller integrated
* Rated data
**ErP 2015

Characteristic curve

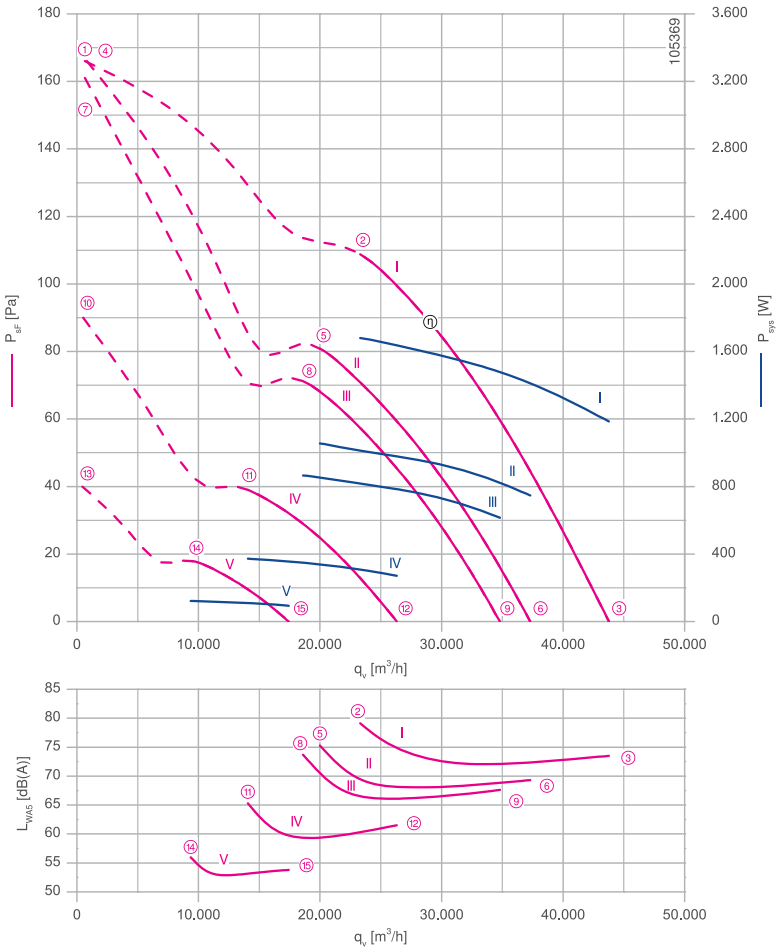

Measured in full bell mouth without guard grille in installation type A according to ISO 5801.

Connection diagram Page 530
1360-403

System components Page 430

Dimensions mm

Airflow direction A

Design F - flange ring with two flanges, without guard grille

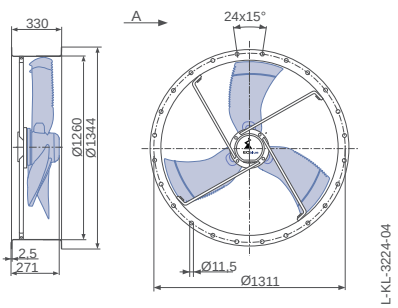

Design L - round full bell mouth, guard grille suction side

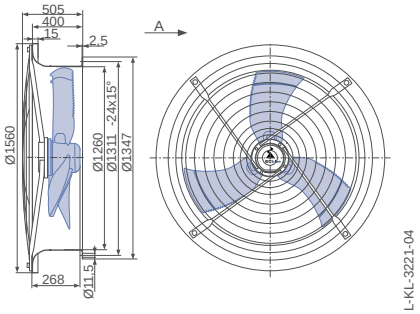

Design L - round full bell mouth, guard grille two-sided

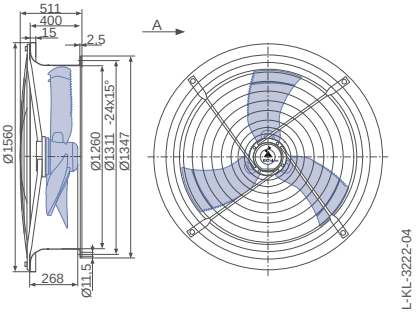

Performance data

Type	Characteristic curve	Speed n min⁻¹	Operating point	Current I A	Input power P_{sys} W	Suction side sound power level L_{WA5} dB(A)	Maximum ambient temperature t_R °C
FN125-ZI_.GL._3P1	I	550	①	4.20	1600		60
			②	4.40	1700	79	
			③	3.20	1200	74	
	II	470	④	4.20	1600		70
			⑤	2.80	1050	75	
			⑥	2.00	740	69	
	III	440	⑦	4.00	1500		
			⑧	2.30	860	74	
			⑨	1.70	620	68	
	IV	330	⑩	1.70	620		
			⑪	1.05	370	66	
			⑫	0.84	270	62	
	V	220	⑬	0.64	190		
			⑭	0.48	120	56	
			⑮	0.40	95	54	

Current values determined at 230V

Fan ordering information

Airflow direction A

Airflow direction V

Design	F (without guard grille)	L (guard grille suction side)	L (guard grille two-sided)	I (guard grille pressure side)	L (guard grille pressure side)	L (guard grille two-sided)
	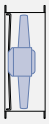	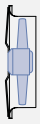	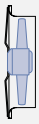		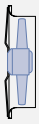	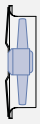
Type **Article no.**	**FN125-ZIF.GL.A3P1** **167516**	**FN125-ZIL.GL.A3P1** **167510**	**FN125-ZIL.GL.A3P1** **167511**	**FN125-ZII.GL.V3P1** **167515**	**FN125-ZIL.GL.V3P1** **167509**	**FN125-ZIL.GL.V3P1** **167508**
Weight kg	70.50	91.40	97.50	43.90	89.60	97.30

Control technology

Control modules	Sensor control modules	Add-on modules	Operating terminal
			
Page 452	Page 454	Page 463	Page 472

Airflow direction V

Design I - axial bolted, mounting for bell mouth flange, guard grille pressure side

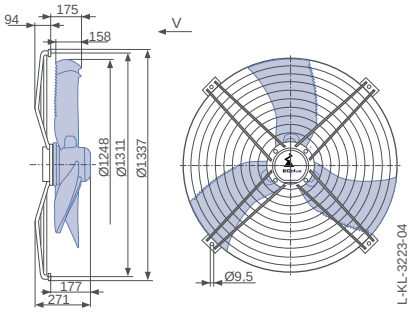

Design L - round full bell mouth, guard grille pressure side

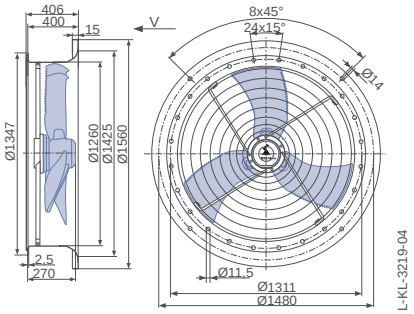

Design L - round full bell mouth, guard grille two-sided

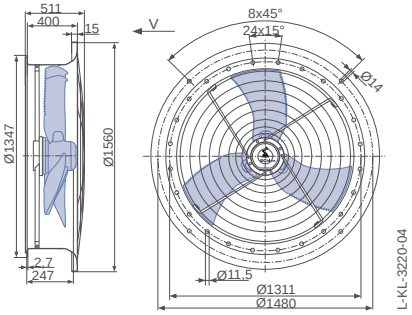

FE2owlet-EC blue

for three phase alternating current, 200-240 V

FN125



Characteristic curve

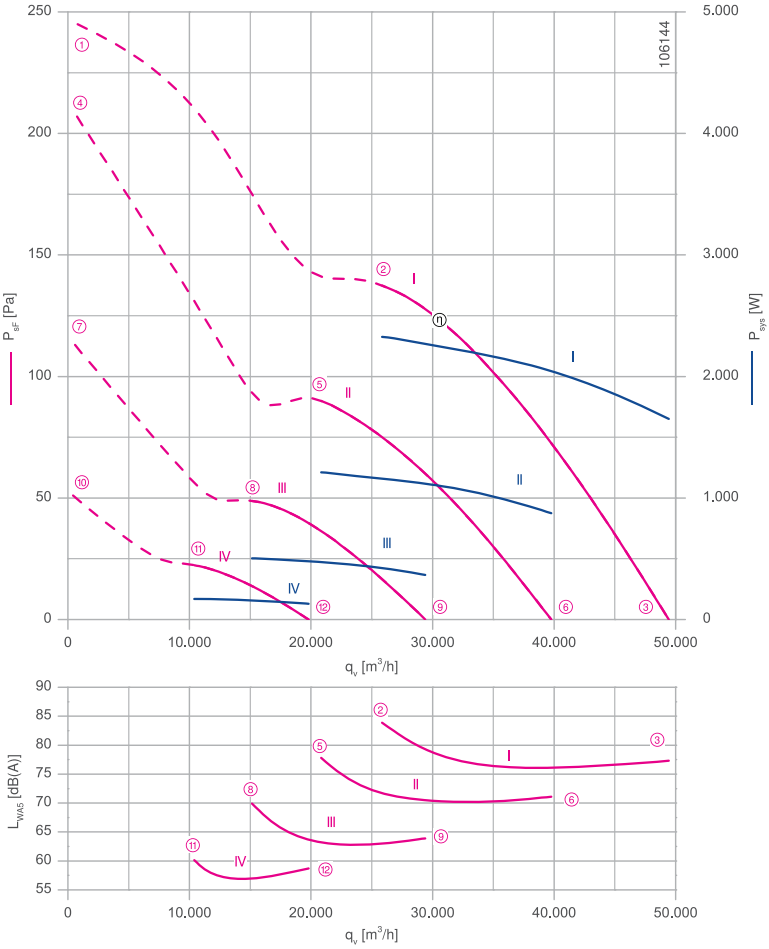

Measured in full bell mouth without guard grille in installation type A according to ISO 5801.

Description

Motor technology: EC
Rated voltage U_N: **3~ 200-240 V***
Rated frequency f_N: **50/60 Hz***
Input power P_{sys}: **2.30 kW***
Rated current I_N: **7.20- 6.00 A***
Rated speed n_N: **620 min^{-1}***
Thermal class: **THCL155***
Min. permitted ambient temperature $t_{R(min)}$: -35 °C
Max. permitted ambient temperature $t_{R(max)}$: 60 °C
Electrical connection: integrated Controller
Number of blades: 3
Protection class: IP54
Motor protection: Integrated active temperature management
Blades: Aluminium, uncoated
Rotor: Aluminium, 1 coat paint, ultramarine blue
Conformity: ErP 2015, CE, UL
ErP-data
Efficiency η_{statA}: 50.1 %
Efficiency: N_{actual} = 54.3 / N_{target} = 40**
EC controller integrated
* Rated data
**ErP 2015

Connection diagram Page 530
1360-403

System components Page 430

Dimensions mm

Airflow direction A

Design F - flange ring with two flanges, without guard grille

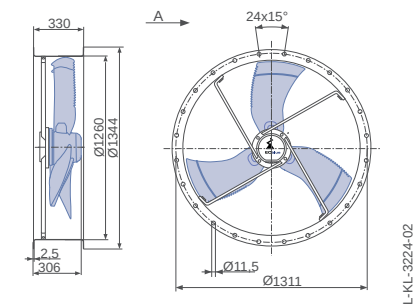

Design L - round full bell mouth, guard grille suction side

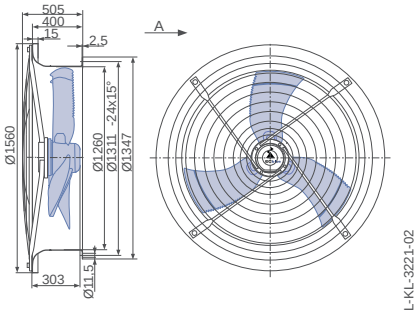

Design L - round full bell mouth, guard grille two-sided

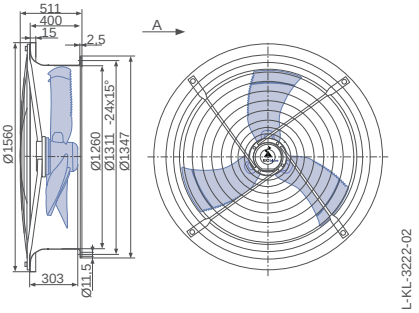

Performance data

Type	Characteristic curve	Speed n min⁻¹	Operating point	Current I A	Input power P_{sys} W	Suction side sound power level L_{WA5} dB(A)
FN125-ZI_.GQ._3P1	I	620	①	7.20	2800	
			②	6.20	2300	84
			③	4.40	1650	77
	II	500	④	5.60	2100	
			⑤	3.20	1200	78
			⑥	2.40	880	71
	III	370	⑦	2.30	840	
			⑧	1.40	500	70
			⑨	1.05	370	64
	IV	250	⑩	0.84	270	
			⑪	0.60	170	60
			⑫	0.52	130	59

Current values determined at 230V

Fan ordering information

Airflow direction A

Airflow direction V

Design	F (without guard grille)	L (guard grille suction side)	L (guard grille two-sided)	I (guard grille pressure side)	L (guard grille pressure side)	L (guard grille two-sided)
	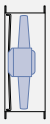	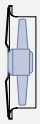				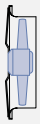
Type **Article no.**	**FN125-ZIF.GQ.A3P1** **167496**	**FN125-ZIL.GQ.A3P1** **167490**	**FN125-ZIL.GQ.A3P1** **167491**	**FN125-ZII.GQ.V3P1** **167495**	**FN125-ZIL.GQ.V3P1** **167489**	**FN125-ZIL.GQ.V3P1** **167488**
Weight kg	76.40	97.30	103.40	49.80	95.50	103.20

Control technology

Control modules	Sensor control modules	Add-on modules	Operating terminal
			
Page 452	Page 454	Page 463	Page 472

Airflow direction V

Design I - axial bolted, mounting for bell mouth flange, guard grille pressure side

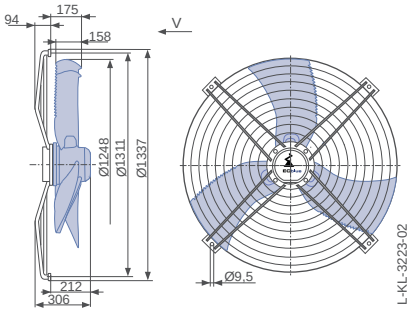

Design L - round full bell mouth, guard grille pressure side

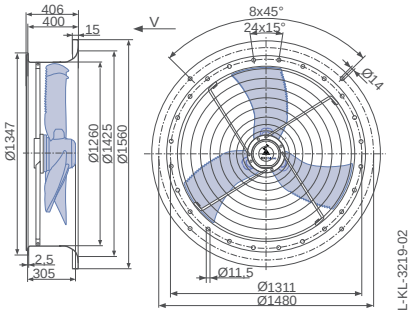

Design L - round full bell mouth, guard grille two-sided

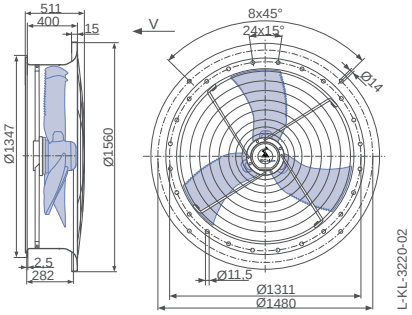

FE2owlet-EC blue

for three phase alternating current, 380-480 V

FN125



Description

Motor technology: EC
Rated voltage U_N: **3~ 380-480 V***
Rated frequency f_N: **50/60 Hz***
Input power P_{sys}: **1.90 kW***
Rated current I_N: **3.10- 2.40 A***
Rated speed n_N: **570 min^{-1}***
Thermal class: **THCL155***
Min. permitted ambient temperature $t_{R(min)}$: -35 °C
Max. permitted ambient temperature $t_{R(max)}$: 60 °C
Electrical connection: integrated Controller
Number of blades: 3
Protection class: IP54
Motor protection: Integrated active temperature management
Blades: Aluminium, uncoated
Rotor: Aluminium, 1 coat paint, ultramarine blue
Conformity: ErP 2015, CE, UL
ErP-data
Efficiency η_{statA}: 47.8 %
Efficiency: N_{actual} = 52.5 / N_{target} = 40**
EC controller integrated
* Rated data
**ErP 2015

Characteristic curve

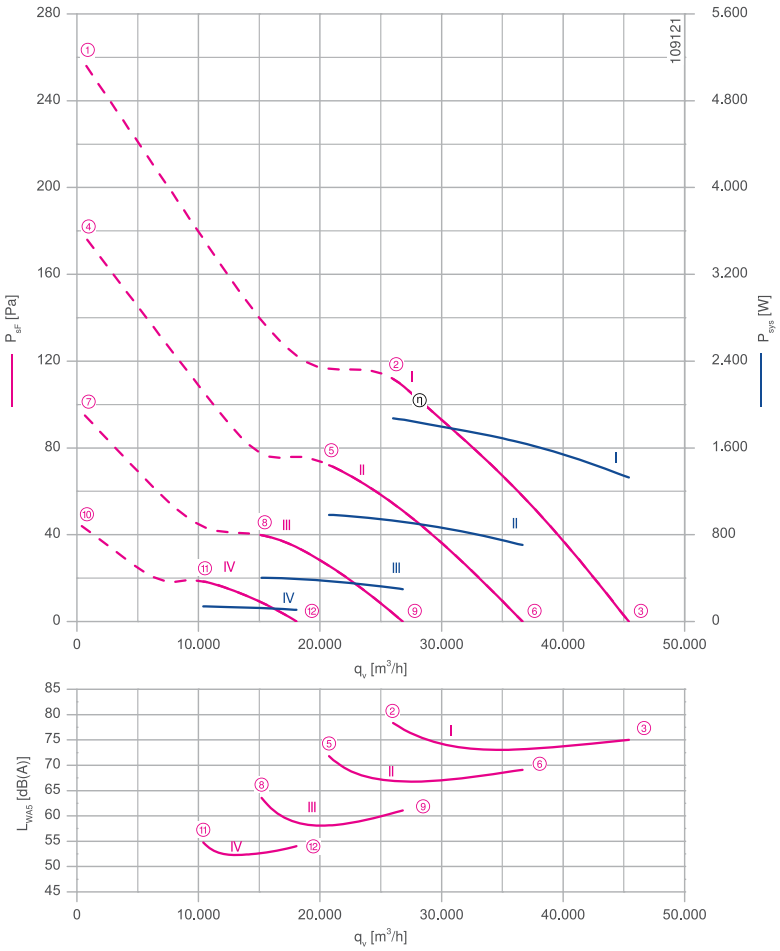

Measured in full bell mouth without guard grille in installation type A according to ISO 5801.

Connection diagram Page 530
1360-403

System components Page 430

Dimensions mm

Airflow direction A

Design F - flange ring with two flanges, without guard grille

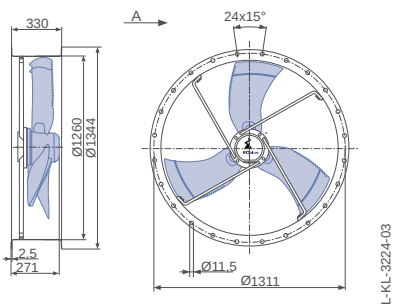

Design L - round full bell mouth, guard grille suction side

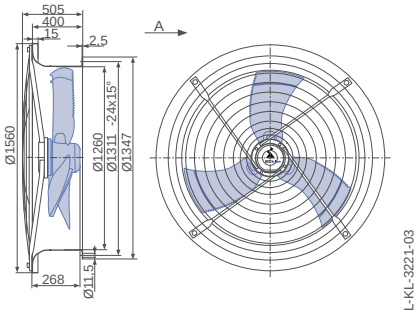

Design L - round full bell mouth, guard grille two-sided

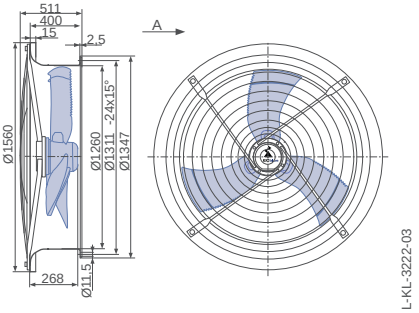

Performance data

Type	Characteristic curve	Speed n min⁻¹	Operating point	Current I A	Input power P_{sys} W	Suction side sound power level L_{WA5} dB(A)	Maximum ambient temperature t_R °C
FN125-ZI_.GL._3P1	I	570	①	4.80	3200		60
			②	2.90	1900	79	
			③	2.10	1350	75	
	II	460	④	2.70	1700		70
			⑤	1.60	980	72	
			⑥	1.20	700	69	
	III	340	⑦	1.20	680		
			⑧	0.86	400	63	
			⑨	0.70	300	61	
	IV	230	⑩	0.60	220		
			⑪	0.46	140	55	
			⑫	0.39	110	54	

Current values determined at 400V

Fan ordering information

Airflow direction A | **Airflow direction V**

Design	F (without guard grille)	L (guard grille suction side)	L (guard grille two-sided)	I (guard grille pressure side)	L (guard grille pressure side)	L (guard grille two-sided)
	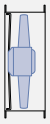	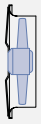				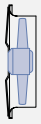
Type	**FN125-ZIF.GL.A3P1**	**FN125-ZIL.GL.A3P1**	**FN125-ZIL.GL.A3P1**	**FN125-ZII.GL.V3P1**	**FN125-ZIL.GL.V3P1**	**FN125-ZIL.GL.V3P1**
Article no.	**167506**	**167500**	**167501**	**167505**	**167499**	**167498**
Weight kg	70.50	91.40	97.50	43.90	89.60	97.30

Control technology

Control modules	Sensor control modules	Add-on modules	Operating terminal
			
Page 452	Page 454	Page 463	Page 472

Airflow direction V

Design I - axial bolted, mounting for bell mouth flange, guard grille pressure side

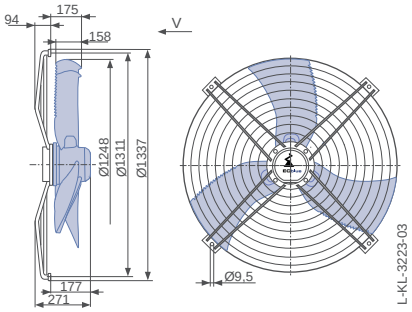

Design L - round full bell mouth, guard grille pressure side

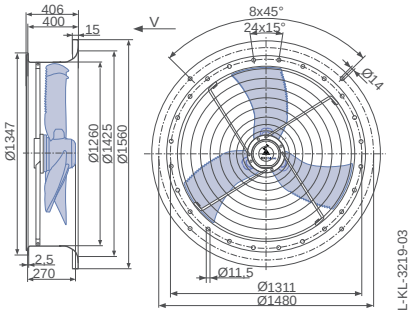

Design L - round full bell mouth, guard grille two-sided

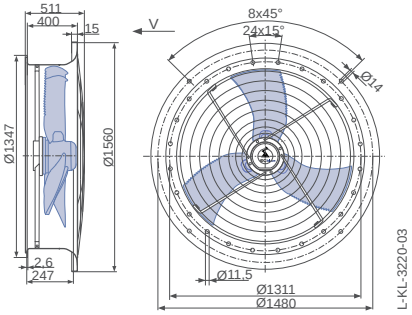

FE2owlet-EC blue

for three phase alternating current, 380-480 V

FN125



Description

Motor technology: EC
Rated voltage U_N: **3~ 380-480 V***
Rated frequency f_N: **50/60 Hz***
Input power P_{sys}: **2.70 kW***
Rated current I_N: **4.40- 3.40 A***
Rated speed n_N: **650 min^{-1}***
Thermal class: **THCL155***
Min. permitted ambient temperature $t_{R(min)}$: -35 °C
Max. permitted ambient temperature $t_{R(max)}$: 60 °C
Electrical connection: integrated Controller
Number of blades: 3
Protection class: IP54
Motor protection: Integrated active temperature management
Blades: Aluminium, uncoated
Rotor: Aluminium, 1 coat paint, ultramarine blue
Conformity: ErP 2015, CE, UL
ErP-data
Efficiency η_{statA}: 51.0 %
Efficiency: N_{actual} = 54.7 / N_{target} = 40**
EC controller integrated
* Rated data
**ErP 2015

Characteristic curve

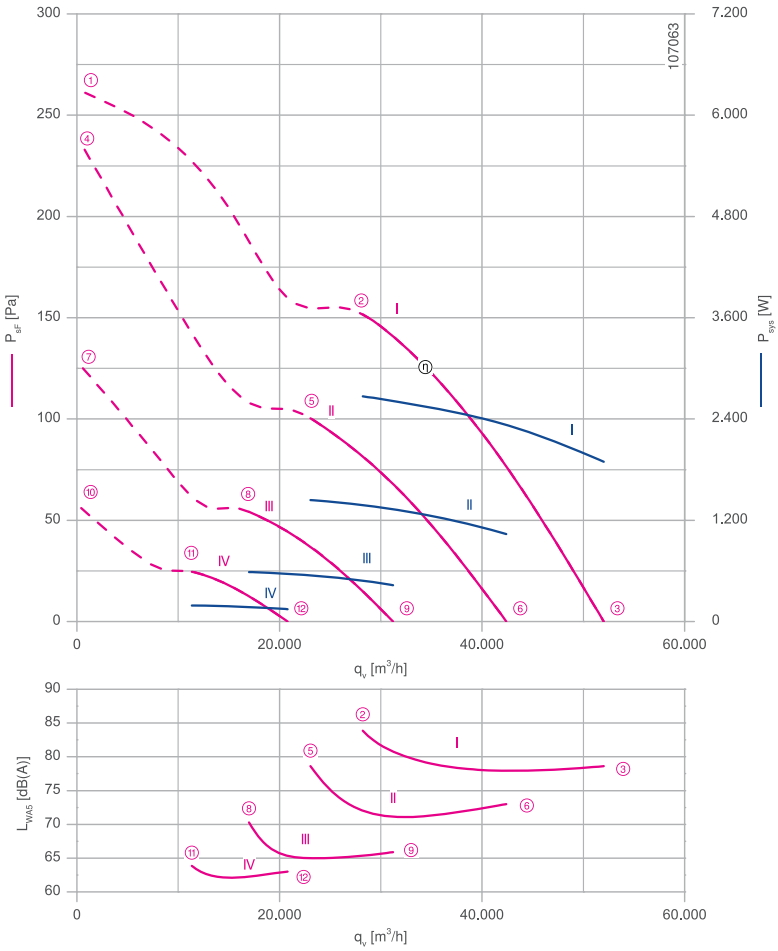

Measured in full bell mouth without guard grille in installation type A according to ISO 5801.

Connection diagram Page 530
1360-403

System components Page 430

Dimensions mm

Airflow direction A

Design F - flange ring with two flanges, without guard grille

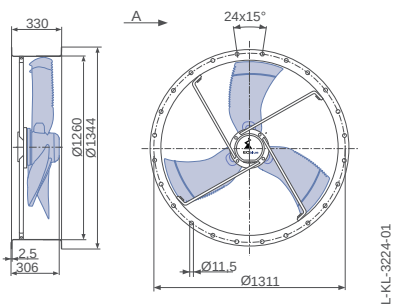

Design L - round full bell mouth, guard grille suction side

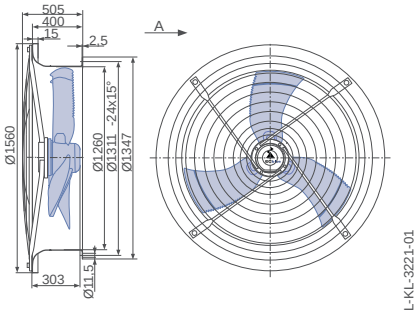

Design L - round full bell mouth, guard grille two-sided

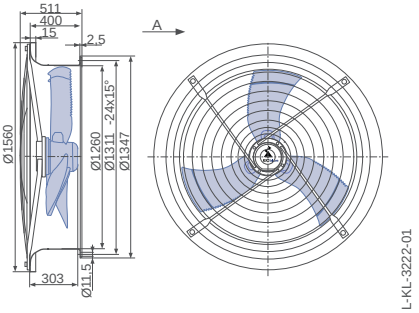

Performance data

Type	Characteristic curve	Speed n min⁻¹	Operating point	Current I A	Input power P_{sys} W	Suction side sound power level L_{WA5} dB(A)
FN125-ZI_.GQ._3P1	I	650	①	4.60	3000	
			②	4.00	2700	84
			③	2.90	1900	79
	II	530	④	3.80	2500	
			⑤	2.30	1450	79
			⑥	1.65	1050	73
	III	390	⑦	1.60	980	
			⑧	1.05	580	71
			⑨	0.84	440	66
	IV	260	⑩	0.70	310	
			⑪	0.50	190	64
			⑫	0.42	150	63

Current values determined at 400V

Fan ordering information

Airflow direction A

Airflow direction V

Design	F (without guard grille)	L (guard grille suction side)	L (guard grille two-sided)	I (guard grille pressure side)	L (guard grille pressure side)	L (guard grille two-sided)
	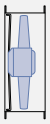	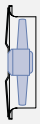				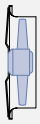
Type **Article no.**	**FN125-ZIF.GQ.A3P1** **167486**	**FN125-ZIL.GQ.A3P1** **167480**	**FN125-ZIL.GQ.A3P1** **167481**	**FN125-ZII.GQ.V3P1** **167485**	**FN125-ZIL.GQ.V3P1** **167479**	**FN125-ZIL.GQ.V3P1** **167478**
Weight kg	76.40	97.30	103.40	49.80	95.50	103.20

Control technology

Control modules	Sensor control modules	Add-on modules	Operating terminal
			
Page 452	Page 454	Page 463	Page 472

Airflow direction V

Design I - axial bolted, mounting for bell mouth flange, guard grille pressure side

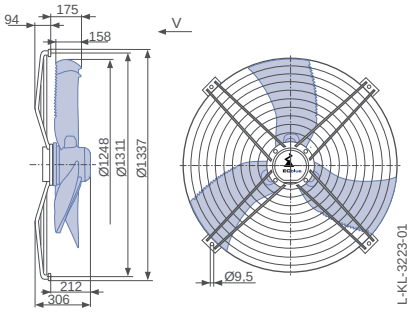

Design L - round full bell mouth, guard grille pressure side

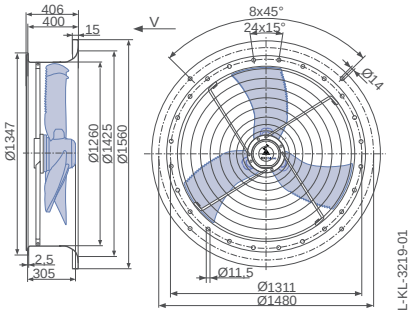

Design L - round full bell mouth, guard grille two-sided

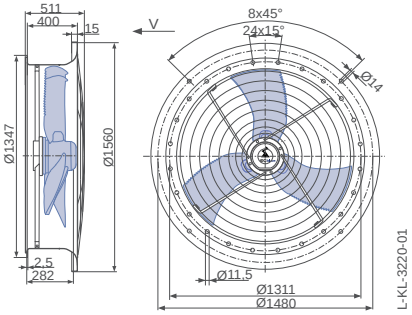





FE2owlet
AC - Technology

Product overview

Quick selection	Page 142
Size 200	Page 146
Size 250	Page 150
Size 300	Page 154
Size 310	Page 158
Size 350	Page 164
Size 400	Page 172
Size 420	Page 182
Size 450	Page 190
Size 500	Page 200
Size 560	Page 212
Size 630	Page 218
Size 710	Page 230
Size 800	Page 240
Size 910	Page 252
Size 1000	Page 262
Size 1250	Page 274

Size	Voltage	Number of poles	Type	Airflow direction	ErP	Page
200	1~ 230 V	2	FN020-2E_.W6._7	A → V	-	146
		4	FN020-4E_.W6._7	A → V	-	148
250	1~ 230 V	2	FN025-2E_.WA._7	A → V	-	150
		4	FN025-4E_.W8._7	A → V	-	152
300	1~ 230 V	4	FN030-4E_.WA._7	A → V	-	154
			FN030-4E_.WC._7	A → V	-	156
310	1~ 230 V	4	FN031-4E_.WD._7	A → V	-	158
	3~ 400 V		FN031-4E_.0F.V7P2	→ V	-	160
			FN031-4D_.0F.V7P2	→ V	-	162
350	1~ 230 V	4	FN035-4E_.WD._7	A → V	-	164
			FN035-4E_.0F._7P3	A → V	2015	166
		6	FN035-6E_.0C._7P2	A → V	-	168
	3~ 400 V	4-4	FN035-VD_.0F._7P2	A → V	2015	170
400	1~ 230 V	4	FN040-4E_.0F._7P1	A → V	2015	172
			FN040-4E_.0F._7P2	A → V	2015	174
		6	FN040-6E_.0F._7P1	A → V	-	176
	3~ 400 V	4-4	FN040-VD_.0F._7P1	A → V	2015	178
			FN040-VD_.0F._7P2	A → V	2015	180
420	1~ 230 V	4	FN042-4E_.4I.A7P2	A	2015	182
		6	FN042-6E_.0F._7P1	A → V	-	184
	3~ 400 V	4-4	FN042-VD_.2F._7P1	A → V	2015	186
		6-6	FN042-SD_.2C._7P1	A → V	-	188
450	1~ 230 V	4	FN045-4E_.4I._7P1	A → V	2015	190
		6	FN045-6E_.2F._7P3	A → V	-	192
	3~ 400 V	4-4	FN045-VD_.2F._7P2	A → V	2015	194
			FN045-VD_.4F._7P1	A → V	2015	196
		6-6	FN045-SD_.4F._7P1	A → V	2015	198
500	1~ 230 V	4	FN050-4E_.4I._7P1	A → V	2015	200
		6	FN050-6E_.4F._7P3	A → V	2015	202
		8	FN050-8E_.4C._7P1	A → V	-	204
	3~ 400 V	4-4	FN050-VD_.4I._7P1	A → V	2015	206
		6-6	FN050-SD_.4F._7P1	A → V	2015	208
		8-8	FN050-AD_.4C._7P1	A → V	-	210
560	1~ 230 V	6	FN056-6E_.4I._7P2	A → V	2015	212
	3~ 400 V	4-4	FN056-VD_.4M.V7P2	→ V	2015	214
		6-6	FN056-SD_.4F.V7P2	→ V	2015	216

* with ZIEHL-ABEGG frequency inverter

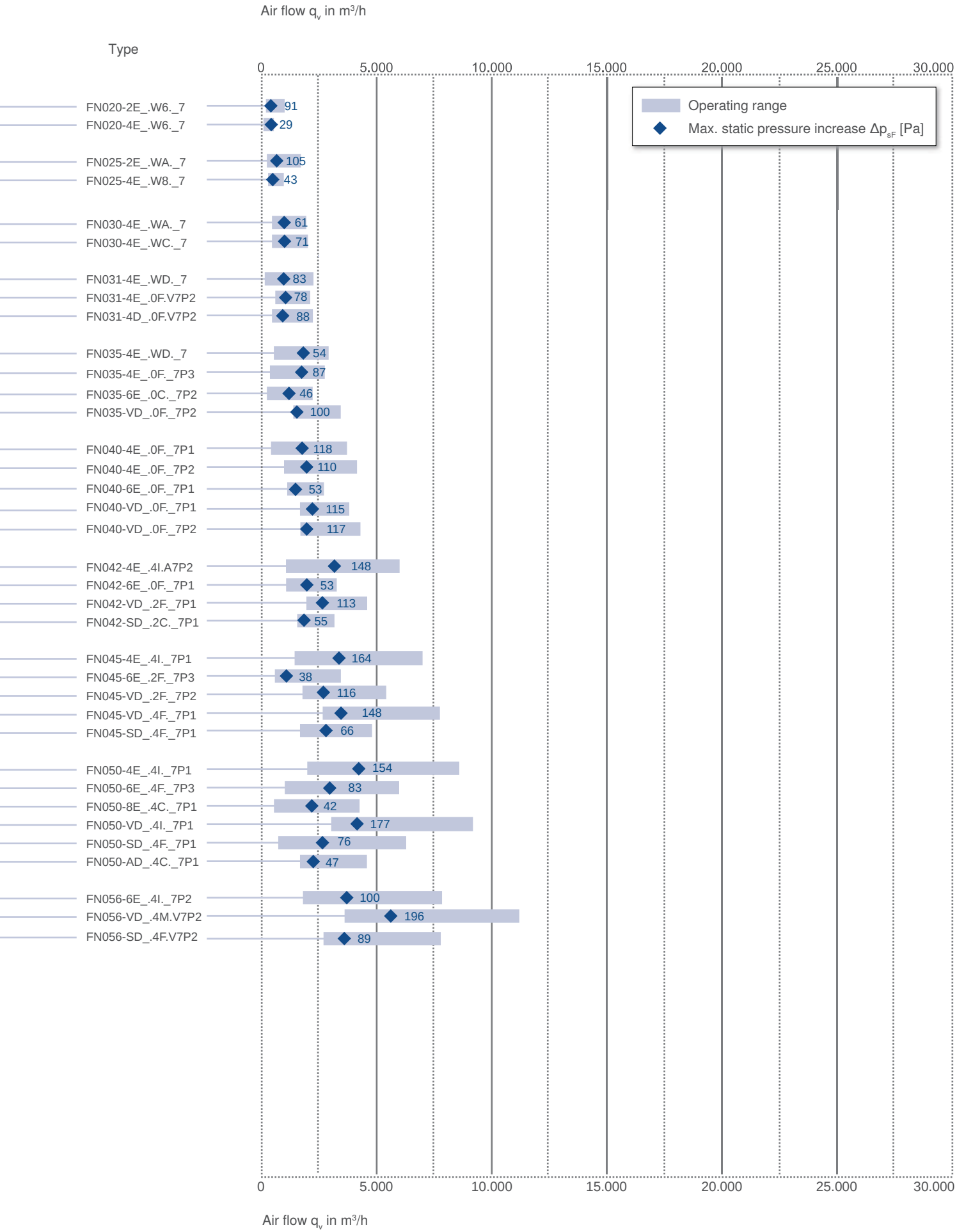
Air flow q_v in m³/h
Type
0
5.000
10.000
15.000
20.000
25.000
30.000
Operating range
Max. static pressure increase Δp_{sF} [Pa]
FN020-2E_.W6._7 91
FN020-4E_.W6._7 29
FN025-2E_.WA._7 105
FN025-4E_.W8._7 43
FN030-4E_.WA._7 61
FN030-4E_.WC._7 71
FN031-4E_.WD._7 83
FN031-4E_.0F.V7P2 78
FN031-4D_.0F.V7P2 88
FN035-4E_.WD._7 54
FN035-4E_.0F._7P3 87
FN035-6E_.0C._7P2 46
FN035-VD_.0F._7P2 100
FN040-4E_.0F._7P1 118
FN040-4E_.0F._7P2 110
FN040-6E_.0F._7P1 53
FN040-VD_.0F._7P1 115
FN040-VD_.0F._7P2 117
FN042-4E_.4I.A7P2 148
FN042-6E_.0F._7P1 53
FN042-VD_.2F._7P1 113
FN042-SD_.2C._7P1 55
FN045-4E_.4I._7P1 164
FN045-6E_.2F._7P3 38
FN045-VD_.2F._7P2 116
FN045-VD_.4F._7P1 148
FN045-SD_.4F._7P1 66
FN050-4E_.4I._7P1 154
FN050-6E_.4F._7P3 83
FN050-8E_.4C._7P1 42
FN050-VD_.4I._7P1 177
FN050-SD_.4F._7P1 76
FN050-AD_.4C._7P1 47
FN056-6E_.4I._7P2 100
FN056-VD_.4M.V7P2 196
FN056-SD_.4F.V7P2 89
0
5.000
10.000
15.000
20.000
25.000
30.000
Air flow q_v in m³/h

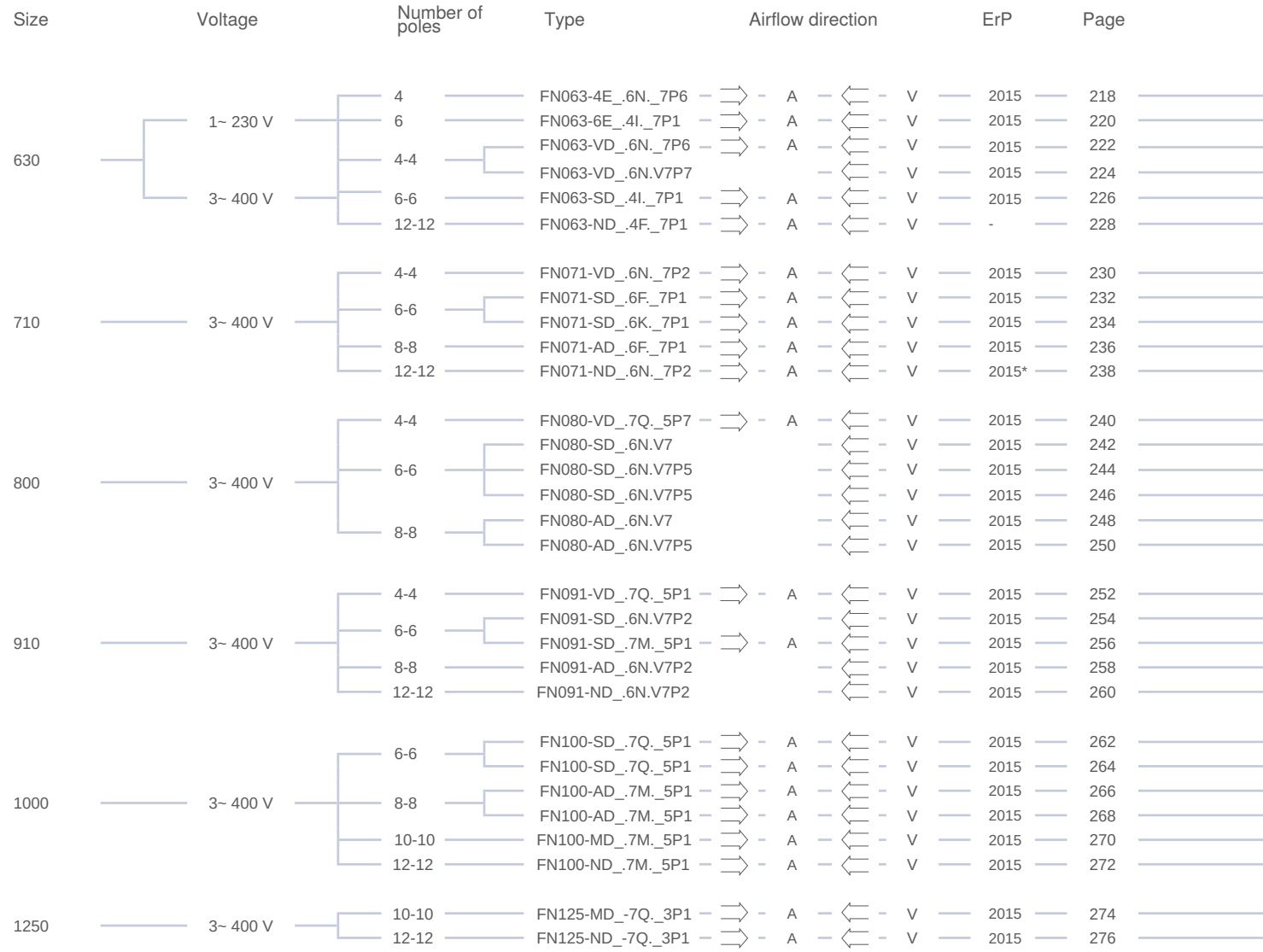

* with ZIEHL-ABEGG frequency inverter

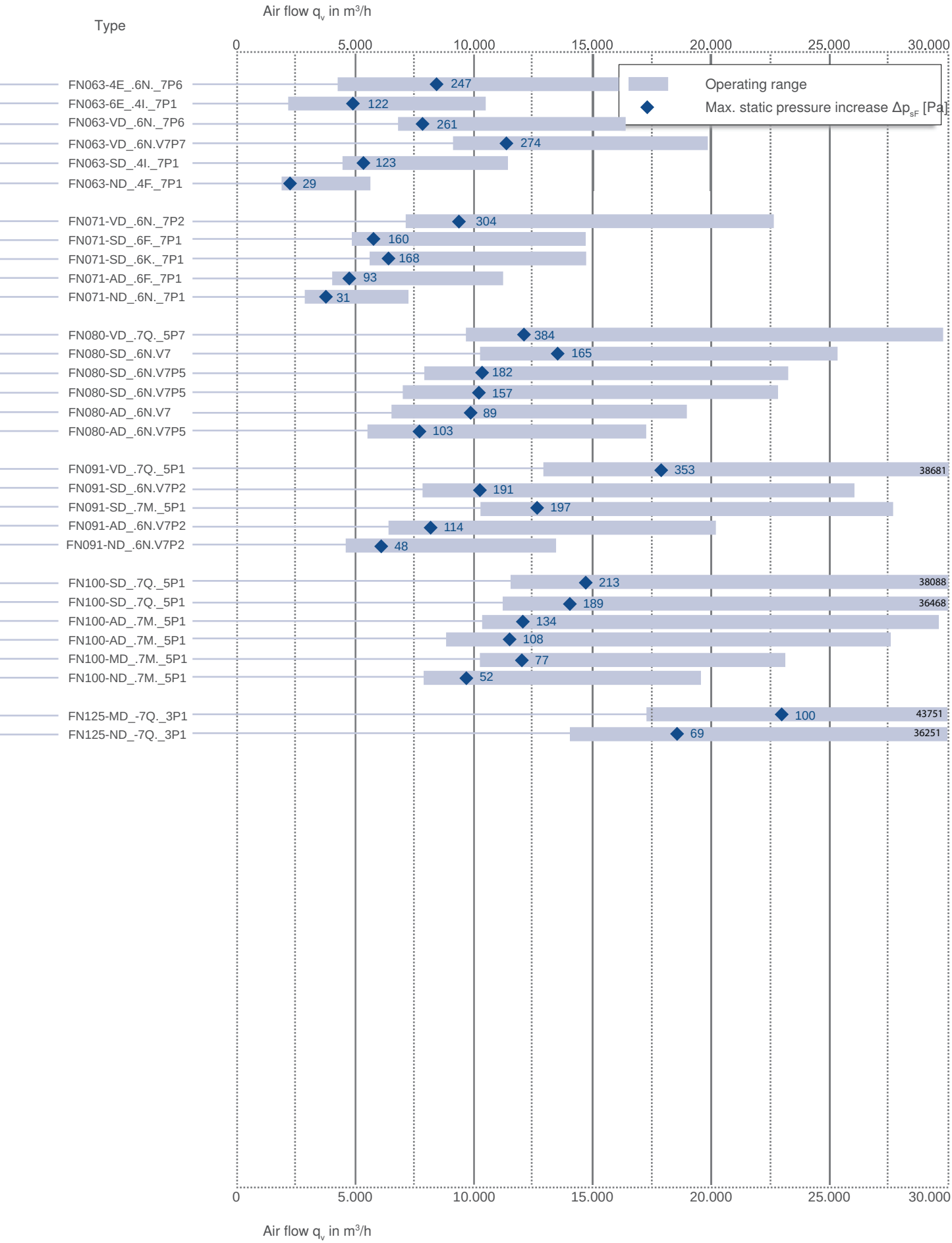
Type
Air flow q_v in m³/h
0
5.000
10.000
15.000
20.000
25.000
30.000
Operating range
Max. static pressure increase Δp_{sF} [Pa]
FN063-4E_.6N._7P6
247
FN063-6E_.4I._7P1
122
FN063-VD_.6N._7P6
261
FN063-VD_.6N.V7P7
274
FN063-SD_.4I._7P1
123
FN063-ND_.4F._7P1
29
FN071-VD_.6N._7P2
304
FN071-SD_.6F._7P1
160
FN071-SD_.6K._7P1
168
FN071-AD_.6F._7P1
93
FN071-ND_.6N._7P1
31
FN080-VD_.7Q._5P7
384
FN080-SD_.6N.V7
165
FN080-SD_.6N.V7P5
182
FN080-SD_.6N.V7P5
157
FN080-AD_.6N.V7
89
FN080-AD_.6N.V7P5
103
FN091-VD_.7Q._5P1
353
38681
FN091-SD_.6N.V7P2
191
FN091-SD_.7M._5P1
197
FN091-AD_.6N.V7P2
114
FN091-ND_.6N.V7P2
48
FN100-SD_.7Q._5P1
213
38088
FN100-SD_.7Q._5P1
189
36468
FN100-AD_.7M._5P1
134
FN100-AD_.7M._5P1
108
FN100-MD_.7M._5P1
77
FN100-ND_.7M._5P1
52
FN125-MD_-7Q._3P1
100
43751
FN125-ND_-7Q._3P1
69
36251

FE2owlet

for single phase alternating current, 2 pole

FN020-2E



Description

Motor technology: AC
Rated voltage U_N: **1~ 230 V***
Rated frequency f_N: **50 Hz*** (60Hz data available)
Input power P_1: **0.08 kW***
Rated current I_N: **0.38 A***
Rated speed n_N: **2550 min^{-1}***
Starting current I_A: 0.65 A
Current increase ΔI: 0 %
Service capacitor C_{400V}: 1.5 µF
Thermal class: **THCL155***
Min. permitted ambient temperature $t_{R(min)}$: -40 °C
Max. permitted ambient temperature $t_{R(max)}$: 60 °C
Electrical connection: Supply cable variable 45 cm
Number of blades: 7
Motor protection: thermal contact
Blades: High Performance Composite Material, uncoated,
Rotor: Aluminium, 1 coat paint, ultramarine blue
Conformity: CE
ErP-data
Not subject to the regulations of ErP directive (P_1< 125 W)
* Rated data

Characteristic curve

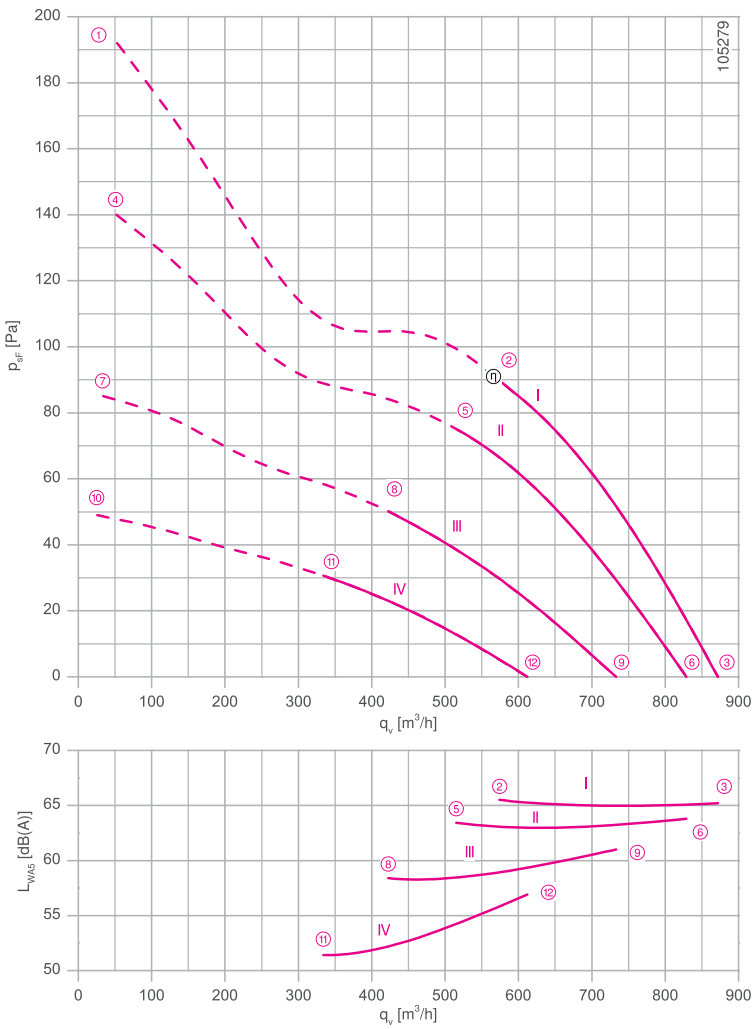

Measured in full bell mouth without guard grille in installation type A according to ISO 5801

Connection diagram Page 532
1360-177X

System components Page 430

Dimensions mm

Airflow direction A

Design D - axial bolted, suspension for full bell mouth, guard grille suction side

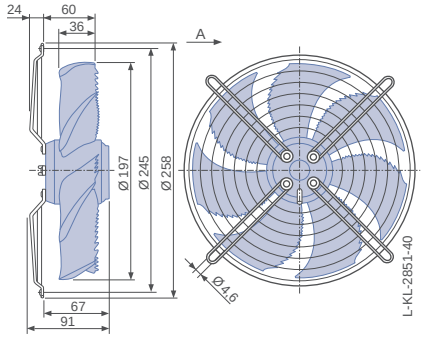

Design L - round full bell mouth, guard grille suction side

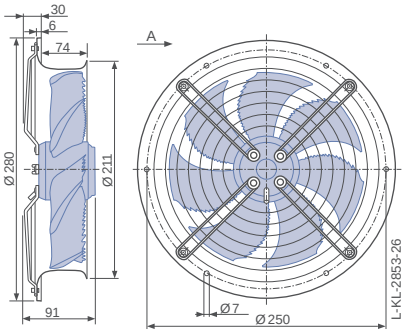

Design Q - square full bell mouth, guard grille suction side

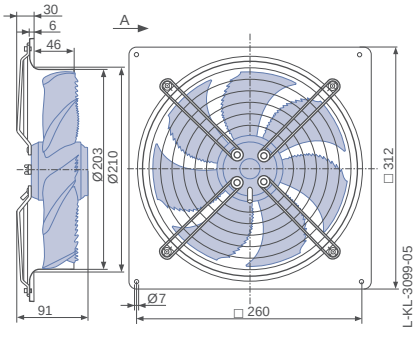

Performance data

Type	Characteristic curve	Voltage U V	Operating point	Current I A	Input power P_1 W	Speed n min^{-1}	Suction side sound power level L_{WA5} dB(A)
FN020-2E_.W6._7	I	230	①	0.39	80	2430	
		230*	②	**0.38***	**75***	**2550***	66
		230	③	0.36	70	2670	65
	II	170	④	0.34	55	2080	
		170	⑤	0.30	50	2300	63
		170	⑥	0.25	42	2530	64
	III	135	⑦	0.32	42	1600	
		135	⑧	0.29	38	1900	59
		135	⑨	0.25	32	2230	61
	IV	110	⑩	0.28	30	1210	
		110	⑪	0.27	30	1490	52
		110	⑫	0.24	26	1880	57

*rated data

Fan ordering information

Airflow direction A | **Airflow direction V**

Design	D (guard grille suction side)	L (guard grille suction side)	Q (guard grille suction side)	I (guard grille pressure side)	H (guard grille pressure side)	Q (guard grille pressure side)
		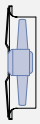				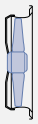
Type	**FN020-2ED.W6.A7**	**FN020-2EL.W6.A7**	**FN020-2EQ.W6.A7**	**FN020-2EI.W6.V7**	**FN020-2EH.W6.V7**	**FN020-2EQ.W6.V7**
Article no.	**164257**	**164258**	**164259**	**164261**	**164260**	**164262**
Weight kg	1.90	2.60	3.00	1.90	2.60	3.00

Control technology

Frequency inverters Fcontrol 1~	Motor protection units 1~	Electronic voltage controllers 1~
		
Page 474	Page 518	Page 492

Airflow direction V

Design I - axial bolted, mounting for bell mouth flange, guard grille pressure side

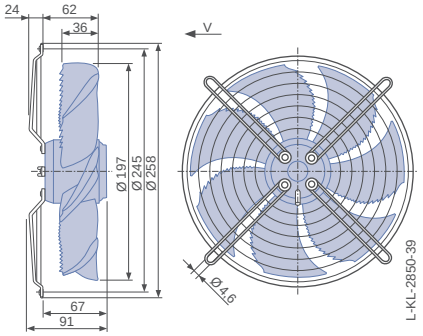

Design H - pipe sockets with a flange, guard grille pressure side

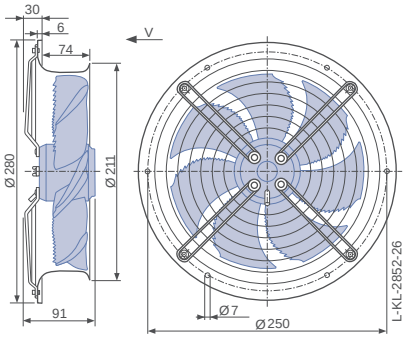

Design Q - square full bell mouth, guard grille pressure side

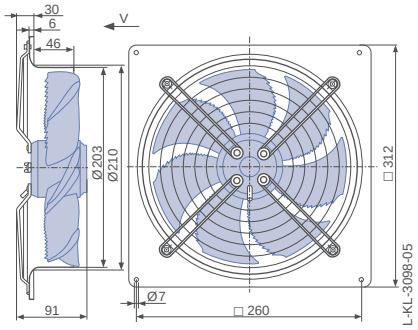

FE2owlet

for single phase alternating current, 4 pole

FN020-4E



Description

Motor technology: AC
Rated voltage U_N: **1~ 230 V***
Rated frequency f_N: **50 Hz*** (60Hz data available)
Input power P_1: **0.03 kW***
Rated current I_N: **0.15 A***
Rated speed n_N: **1420 min^{-1}***
Starting current I_A: 0.28 A
Current increase ΔI: 0 %
Service capacitor C_{400V}: 1.0 µF
Thermal class: **THCL155***
Min. permitted ambient temperature $t_{R(min)}$: -40 °C
Max. permitted ambient temperature $t_{R(max)}$: 70 °C
Electrical connection: Supply cable variable 45 cm
Number of blades: 7
Motor protection: thermal contact
Blades: High Performance Composite Material, uncoated,
Rotor: Aluminium, 1 coat paint, ultramarine blue
Conformity: CE
ErP-data
Not subject to the regulations of ErP directive (P_1< 125 W)
* Rated data

Characteristic curve

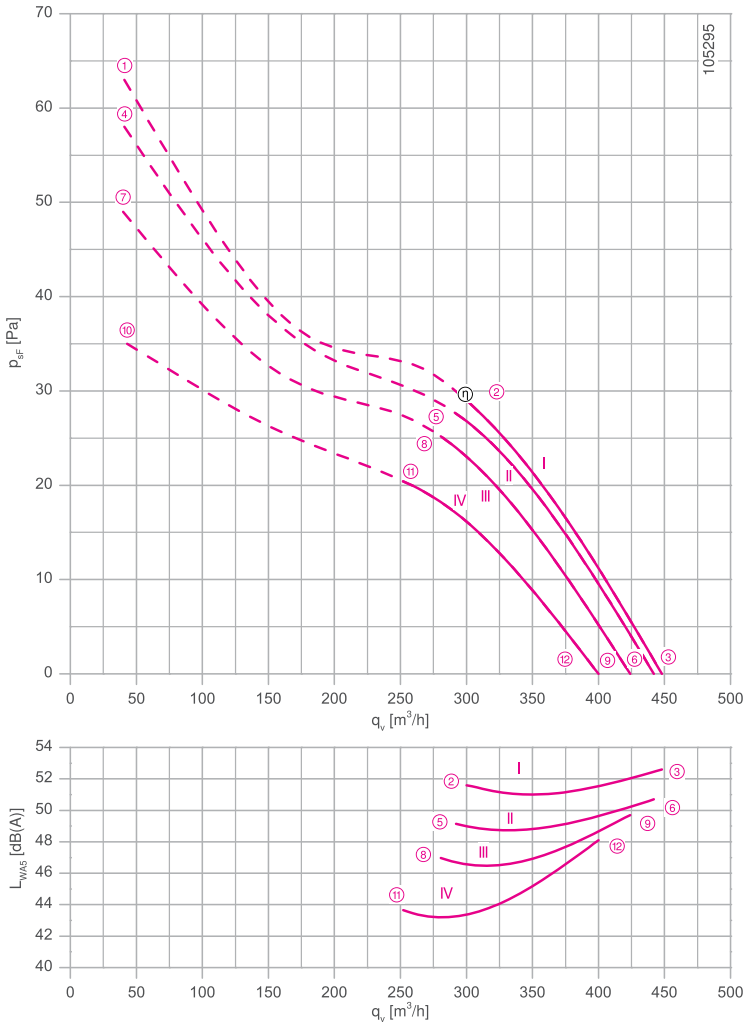

Measured in full bell mouth without guard grille in installation type A according to ISO 5801

Connection diagram Page 532
1360-177X

System components Page 430

Dimensions mm

Airflow direction A

Design D - axial bolted, suspension for full bell mouth, guard grille suction side

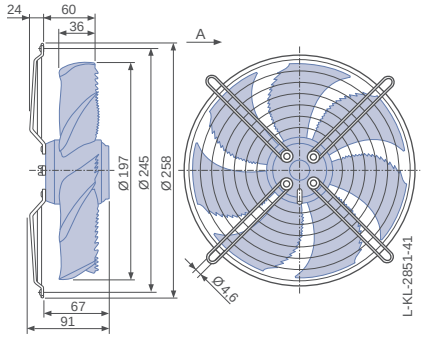

Design L - round full bell mouth, guard grille suction side

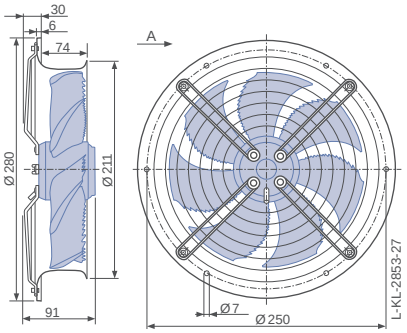

Design Q - square full bell mouth, guard grille suction side

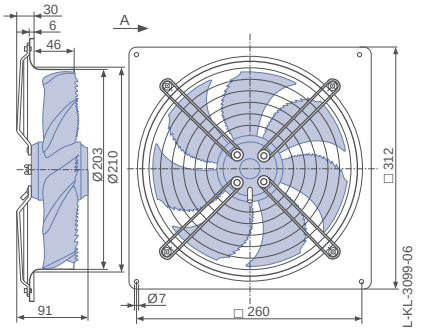

Performance data

Type	Characteristic curve	Voltage U V	Operating point	Current I A	Input power P_1 W	Speed n min⁻¹	Suction side sound power level L_{WA5} dB(A)
FN020-4E_.W6._7	I	230	①	0.15	32	1400	
		230*	②	**0.15***	**30***	**1420***	52
		230	③	0.15	30	1440	53
	II	170	④	0.11	19	1340	
		170	⑤	0.11	17	1380	49
		170	⑥	0.10	16	1410	51
	III	135	⑦	0.10	14	1240	
		135	⑧	0.09	13	1310	47
		135	⑨	0.08	11	1370	50
	IV	110	⑩	0.10	11	1080	
		110	⑪	0.09	10	1190	44
		110	⑫	0.08	9	1290	48

*rated data

Fan ordering information

Airflow direction A | **Airflow direction V**

Design	D (guard grille suction side)	L (guard grille suction side)	Q (guard grille suction side)	I (guard grille pressure side)	H (guard grille pressure side)	Q (guard grille pressure side)
		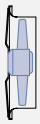				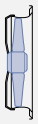
Type	**FN020-4ED.W6.A7**	**FN020-4EL.W6.A7**	**FN020-4EQ.W6.A7**	**FN020-4EI.W6.V7**	**FN020-4EH.W6.V7**	**FN020-4EQ.W6.V7**
Article no.	**164263**	**164264**	**164265**	**164267**	**164266**	**164268**
Weight kg	1.90	2.60	3.00	1.90	2.60	3.00

Control technology

Frequency inverters Fcontrol 1~	Motor protection units 1~	Electronic voltage controllers 1~
		
Page 474	Page 518	Page 492

Airflow direction V

Design I - axial bolted, mounting for bell mouth flange, guard grille pressure side

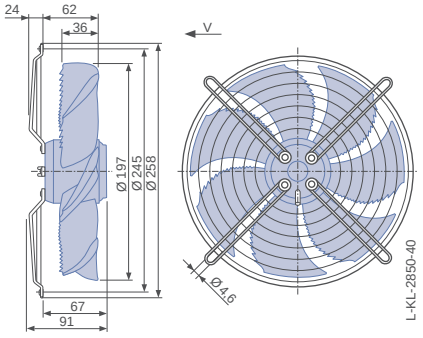

Design H - pipe sockets with a flange, guard grille pressure side

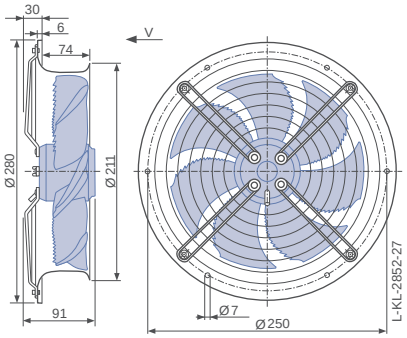

Design Q - square full bell mouth, guard grille pressure side

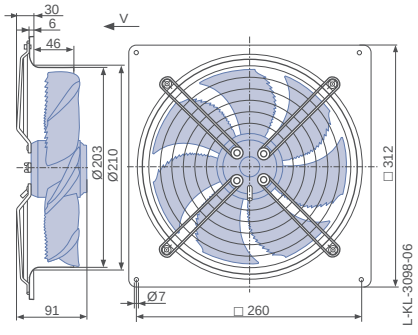

FE2owlet

for single phase alternating current, 2 pole

FN025-2E



Description

Motor technology: AC
Rated voltage U_N: **1~ 230 V***
Rated frequency f_N: **50 Hz*** (60Hz data available)
Input power P_1: **0.12 kW***
Rated current I_N: **0.54 A***
Rated speed n_N: **2160 min^{-1}***
Starting current I_A: 0.75 A
Current increase ΔI: 0 %
Service capacitor C_{400V}: 3.5 µF
Thermal class: **THCL155***
Min. permitted ambient temperature $t_{R(min)}$: -40 °C
Max. permitted ambient temperature $t_{R(max)}$: 65 °C
Electrical connection: Supply cable variable 45 cm
Number of blades: 7
Motor protection: thermal contact
Blades: High Performance Composite Material, uncoated,
Rotor: Aluminium, 1 coat paint, ultramarine blue
Conformity: CE
ErP-data
Not subject to the regulations of ErP directive (P_1< 125 W)
* Rated data

Characteristic curve

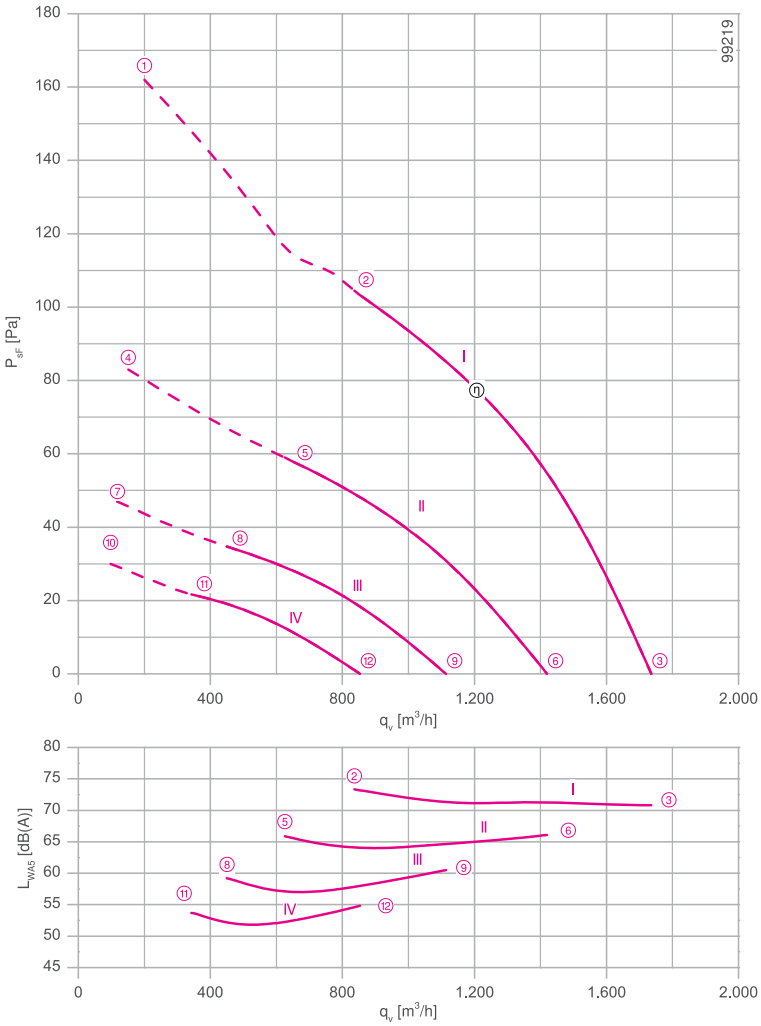

Measured in full bell mouth without guard grille in installation type A according to ISO 5801

Connection diagram Page 532
1360-177X

System components Page 430

Dimensions mm

Airflow direction A

Design W - axial bolted, mounting for short bell mouth, guard grille suction side

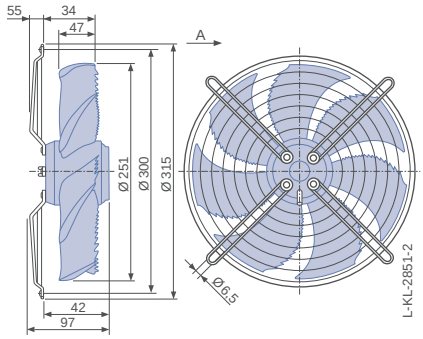

Design D - axial bolted, suspension for full bell mouth, guard grille suction side

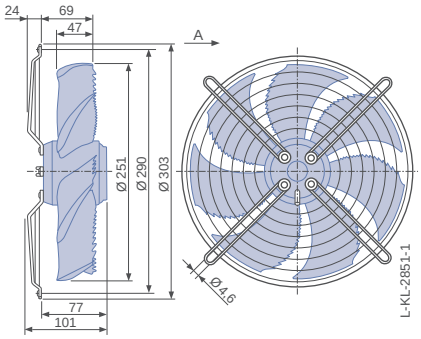

Design L - round full bell mouth, guard grille suction side

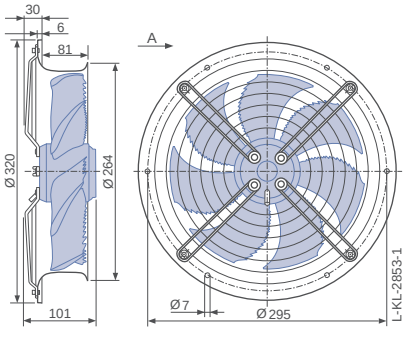

Performance data

Type	Characteristic curve	Voltage U V	Operating point	Current I A	Input power P_1 W	Speed n min^{-1}	Suction side sound power level L_{WA5} dB(A)
FN025-2E_.WA._7	I	230	①	0.58	140	1900	
		230*	②	**0.54***	**120***	**2160***	73
		230	③	0.48	110	2410	71
	II	170	④	0.48	85	1370	
		170	⑤	0.46	80	1630	66
		170	⑥	0.44	75	1970	66
	III	135	⑦	0.40	55	1040	
		135	⑧	0.39	55	1240	59
		135	⑨	0.38	50	1550	61
	IV	110	⑩	0.33	36	830	
		110	⑪	0.33	36	980	53
		110	⑫	0.32	36	1200	55

*rated data

Fan ordering information

Airflow direction A | **Airflow direction V**

Design	W (guard grille suction side)	D (guard grille suction side)	L (guard grille suction side)	K (guard grille pressure side)	I (guard grille pressure side)	H (guard grille pressure side)
			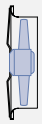			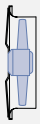
Type	**FN025-2EW.WA.A7**	**FN025-2ED.WA.A7**	**FN025-2EL.WA.A7**	**FN025-2EK.WA.V7**	**FN025-2EI.WA.V7**	**FN025-2EH.WA.V7**
Article no.	**162556**	**161633**	**161634**	**161631**	**162557**	**161630**
Weight kg	2.70	2.50	3.50	2.70	2.50	3.40

Control technology

Frequency inverters Fcontrol 1~	Motor protection units 1~	Electronic voltage controllers 1~
		
Page 474	Page 518	Page 492

Airflow direction V

Design K - axial bolted, mounted for short bell mouth, guard grille pressure side

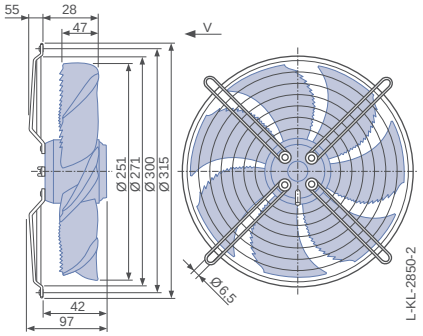

Design I - axial bolted, mounting for bell mouth flange, guard grille pressure side

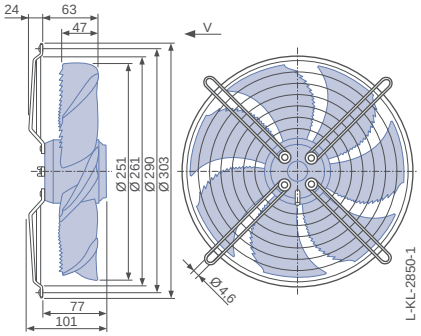

Design H - pipe sockets with a flange, guard grille pressure side

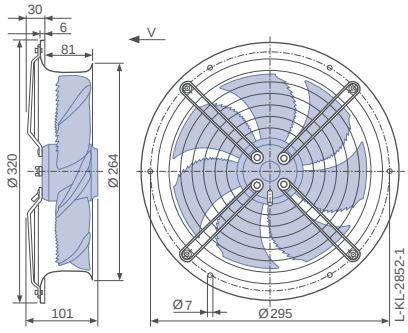

FE2owlet

for single phase alternating current, 4 pole

FN025-4E



Description

Motor technology: AC
Rated voltage U_N: **1~ 230 V***
Rated frequency f_N: **50 Hz*** (60Hz data available)
Input power P_1: **0.05 kW***
Rated current I_N: **0.24 A***
Rated speed n_N: **1370 min^{-1}***
Starting current I_A: 0.40 A
Current increase ΔI: 0 %
Service capacitor C_{400V}: 1.5 µF
Thermal class: **THCL155***
Min. permitted ambient temperature $t_{R(min)}$: -40 °C
Max. permitted ambient temperature $t_{R(max)}$: 55 °C
Electrical connection: Supply cable variable 45 cm
Number of blades: 7
Motor protection: thermal contact
Blades: High Performance Composite Material, uncoated,
Rotor: Aluminium, 1 coat paint, ultramarine blue
Conformity: CE
ErP-data
Not subject to the regulations of ErP directive (P_1< 125 W)
* Rated data

Characteristic curve

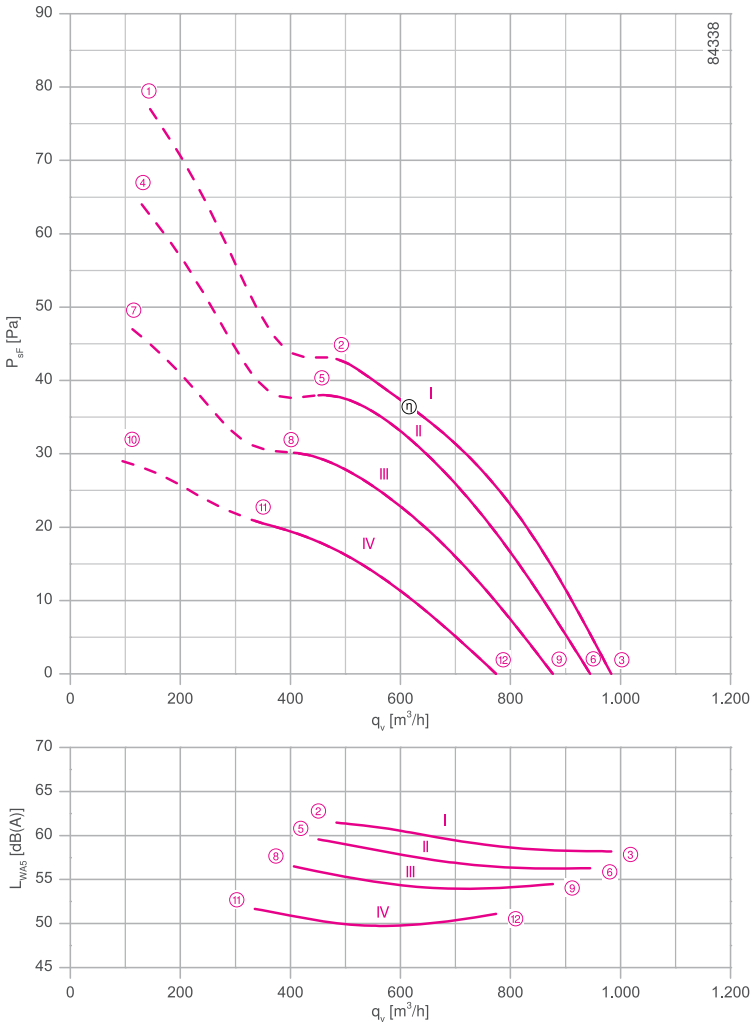

Measured in full bell mouth without guard grille in installation type A according to ISO 5801

Connection diagram Page 532
1360-177X

System components Page 430

Dimensions mm

Airflow direction A

Design W - axial bolted, mounting for short bell mouth, guard grille suction side

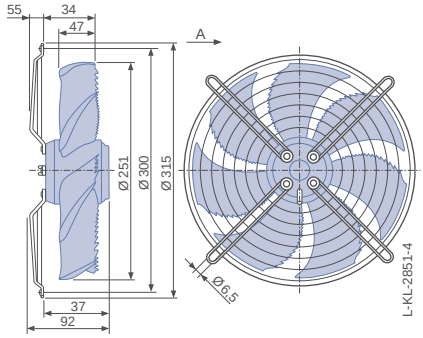

Design D - axial bolted, suspension for full bell mouth, guard grille suction side

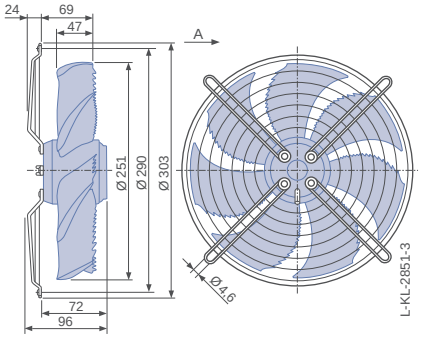

Design L - round full bell mouth, guard grille suction side

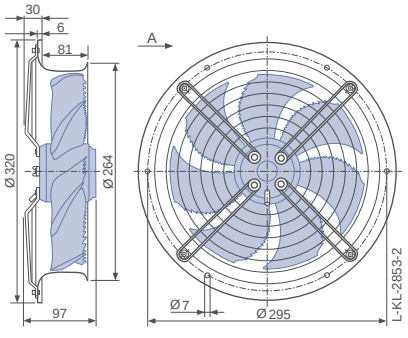

Performance data

Type	Characteristic curve	Voltage U V	Operating point	Current I A	Input power P_1 W	Speed n min^{-1}	Suction side sound power level L_{WA5} dB(A)
FN025-4E_.W8._7	I	230	①	0.24	50	1330	
		230*	②	**0.24***	**48***	**1370***	62
		230	③	0.23	46	1400	58
	II	170	④	0.19	32	1210	
		170	⑤	0.17	28	1280	60
		170	⑥	0.16	26	1340	56
	III	135	⑦	0.18	24	1030	
		135	⑧	0.16	22	1150	57
		135	⑨	0.14	19	1250	55
	IV	110	⑩	0.17	18	820	
		110	⑪	0.16	17	960	52
		110	⑫	0.14	15	1110	51

*rated data

Fan ordering information

Airflow direction A | **Airflow direction V**

Design	W (guard grille suction side)	D (guard grille suction side)	L (guard grille suction side)	K (guard grille pressure side)	I (guard grille pressure side)	H (guard grille pressure side)
			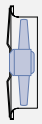			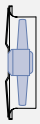
Type	**FN025-4EW.W8.A7**	**FN025-4ED.W8.A7**	**FN025-4EL.W8.A7**	**FN025-4EK.W8.V7**	**FN025-4EI.W8.V7**	**FN025-4EH.W8.V7**
Article no.	**139726**	**139712**	**139719**	**139754**	**139740**	**139747**
Weight kg	2.50	2.30	3.30	2.50	2.30	3.30

Control technology

Frequency inverters Fcontrol 1~	Motor protection units 1~	Electronic voltage controllers 1~
		
Page 474	Page 518	Page 492

Airflow direction V

Design K - axial bolted, mounted for short bell mouth, guard grille pressure side

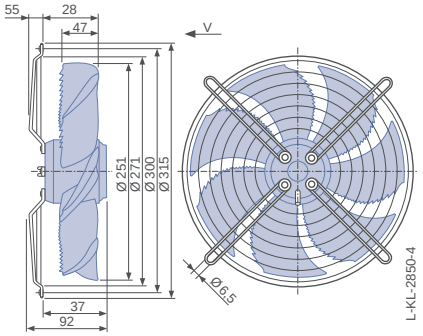

Design I - axial bolted, mounting for bell mouth flange, guard grille pressure side

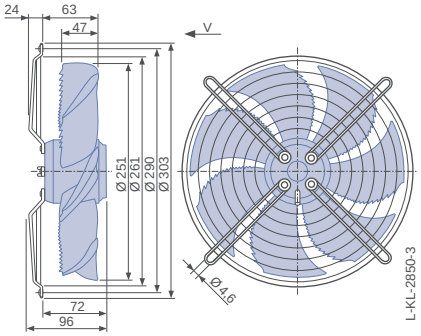

Design H - pipe sockets with a flange, guard grille pressure side

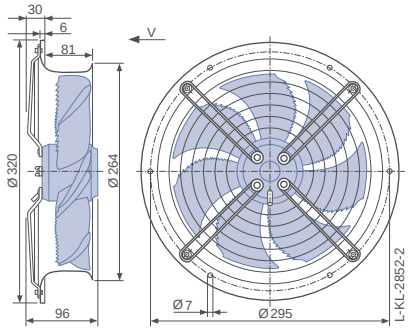

FE2owlet

for single phase alternating current, 4 pole

FN030-4E



Description

Motor technology: AC
Rated voltage U_N: **1~ 230 V***
Rated frequency f_N: **50 Hz*** (60Hz data available)
Input power P_1: **0.09 kW***
Rated current I_N: **0.39 A***
Rated speed n_N: **1290 min^{-1}***
Starting current I_A: 0.63 A
Current increase ΔI: 0 %
Service capacitor C_{400V}: 2.0 µF
Thermal class: **THCL155***
Min. permitted ambient temperature $t_{R(min)}$: -40 °C
Max. permitted ambient temperature $t_{R(max)}$: 60 °C
Electrical connection: Supply cable variable 45 cm
Number of blades: 7
Motor protection: thermal contact
Blades: High Performance Composite Material, uncoated,
Rotor: Aluminium, 1 coat paint, ultramarine blue
Conformity: CE
ErP-data
Not subject to the regulations of ErP directive (P_1< 125 W)
* Rated data

Characteristic curve

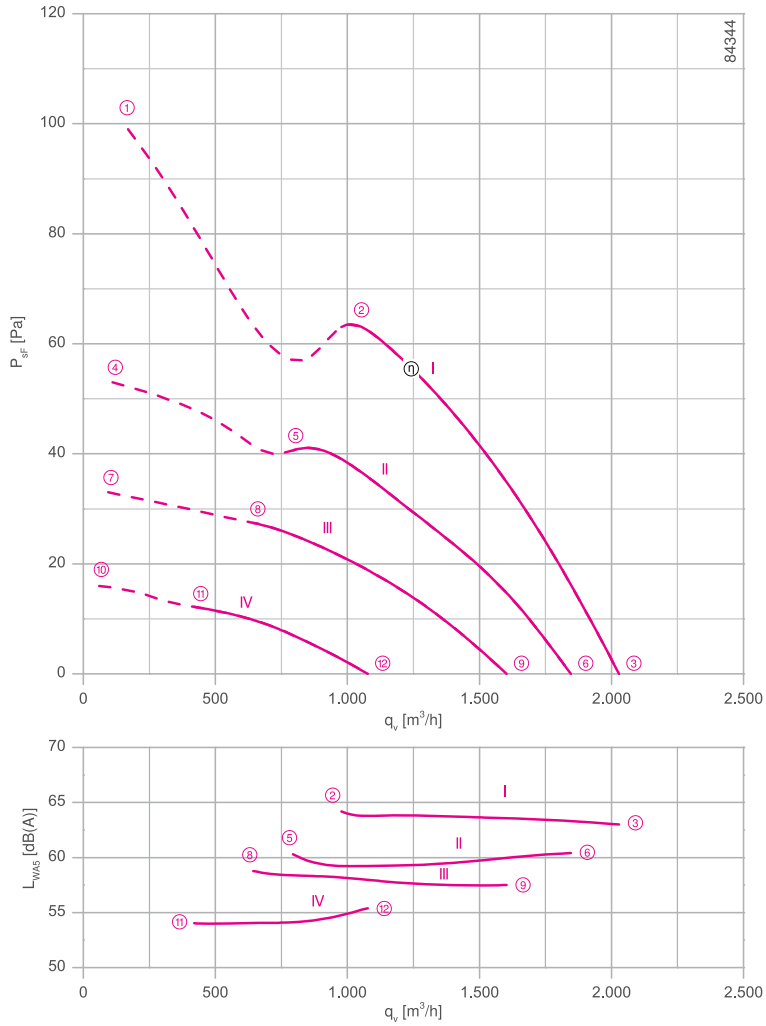

Measured in full bell mouth without guard grille in installation type A according to ISO 5801

Connection diagram Page 532
1360-177X

System components Page 430

Dimensions mm

Airflow direction A

Design W - axial bolted, mounting for short bell mouth, guard grille suction side

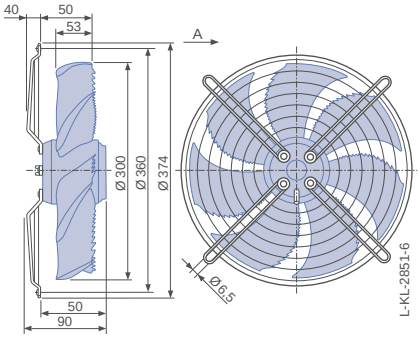

Design D - axial bolted, suspension for full bell mouth, guard grille suction side

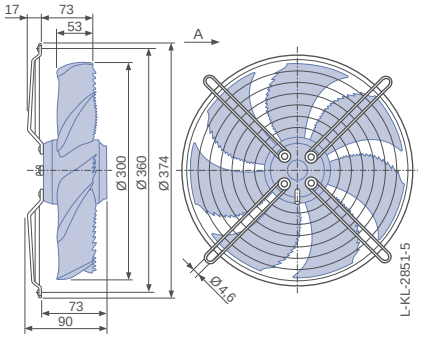

Design L - round full bell mouth, guard grille suction side

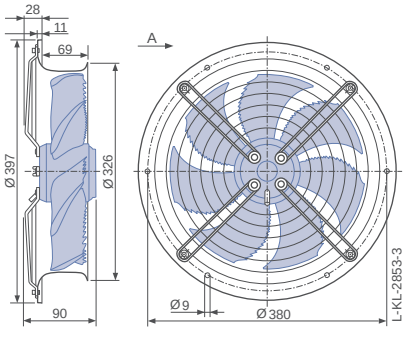

Performance data

Type	Characteristic curve	Voltage U V	Operating point	Current I A	Input power P_1 W	Speed n min^{-1}	Suction side sound power level L_{WA5} dB(A)
FN030-4E_.WA._7	I	230	①	0.44	95	1220	
		230*	②	**0.39***	**85***	**1290***	64
		230	③	0.34	75	1370	63
	II	170	④	0.39	65	890	
		170	⑤	0.36	60	1050	60
		170	⑥	0.30	50	1240	60
	III	145	⑦	0.34	48	710	
		145	⑧	0.33	46	870	59
		145	⑨	0.30	42	1100	58
	IV	110	⑩	0.27	28	490	
		110	⑪	0.26	28	570	54
		110	⑫	0.26	26	740	55

*rated data

Fan ordering information

Airflow direction A | **Airflow direction V**

Design	W (guard grille suction side)	D (guard grille suction side)	L (guard grille suction side)	K (guard grille pressure side)	I (guard grille pressure side)	H (guard grille pressure side)
			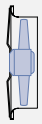			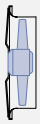
Type	**FN030-4EW.WA.A7**	**FN030-4ED.WA.A7**	**FN030-4EL.WA.A7**	**FN030-4EK.WA.V7**	**FN030-4EI.WA.V7**	**FN030-4EH.WA.V7**
Article no.	**141658**	**141656**	**141657**	**141661**	**141659**	**141660**
Weight kg	3.10	3.60	4.50	3.30	2.90	4.50

Control technology

Frequency inverters Fcontrol 1~	Motor protection units 1~	Electronic voltage controllers 1~
		
Page 474	Page 518	Page 492

Airflow direction V

Design K - axial bolted, mounted for short bell mouth, guard grille pressure side

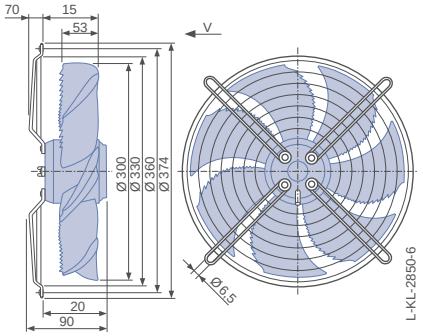

Design I - axial bolted, mounting for bell mouth flange, guard grille pressure side

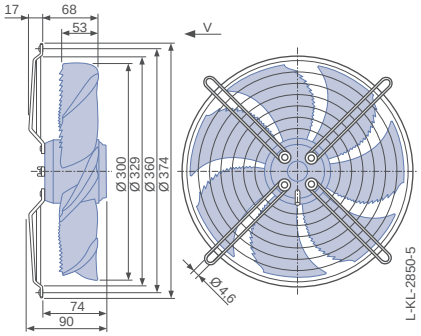

Design H - pipe sockets with a flange, guard grille pressure side

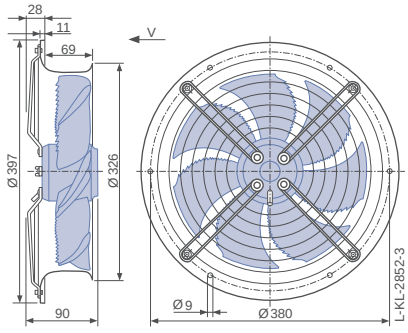

FE2owlet

for single phase alternating current, 4 pole

FN030-4E



Description

Motor technology: AC
Rated voltage U_N: **1~ 230 V***
Rated frequency f_N: **50 Hz*** (60Hz data available)
Input power P_1: **0.09 kW***
Rated current I_N: **0.42 A***
Rated speed n_N: **1330 min^{-1}***
Starting current I_A: 0.77 A
Current increase ΔI: 0 %
Service capacitor C_{400V}: 3.0 µF
Thermal class: **THCL155***
Min. permitted ambient temperature $t_{R(min)}$: -40 °C
Max. permitted ambient temperature $t_{R(max)}$: 60 °C
Electrical connection: Supply cable variable 45 cm
Number of blades: 7
Motor protection: thermal contact
Blades: High Performance Composite Material, uncoated,
Rotor: Aluminium, 1 coat paint, ultramarine blue
Conformity: CE
ErP-data
Not subject to the regulations of ErP directive (P_1< 125 W)
* Rated data

Characteristic curve

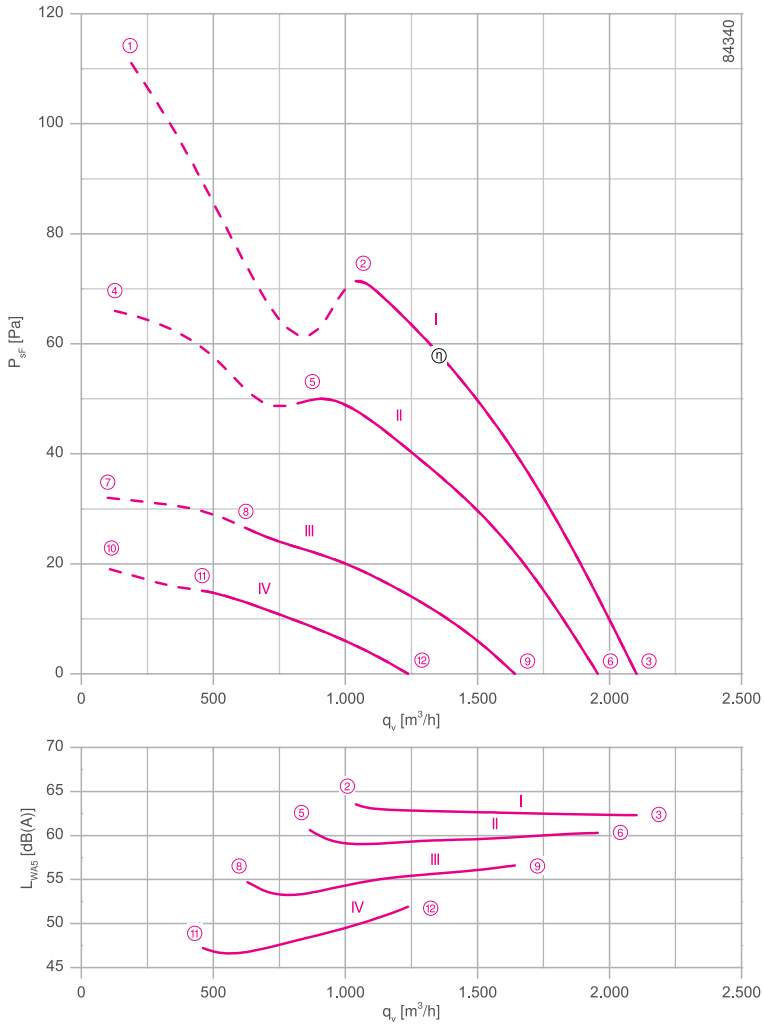

Measured in full bell mouth without guard grille in installation type A according to ISO 5801

Connection diagram Page 532
1360-177X

System components Page 430

Dimensions mm

Airflow direction A

Design W - axial bolted, mounting for short bell mouth, guard grille suction side

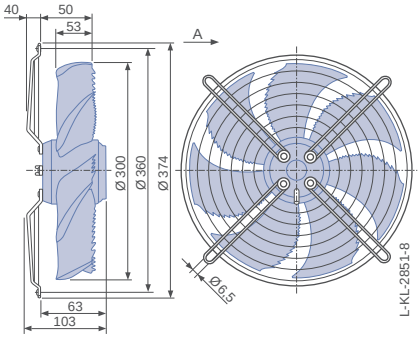

Design D - axial bolted, suspension for full bell mouth, guard grille suction side

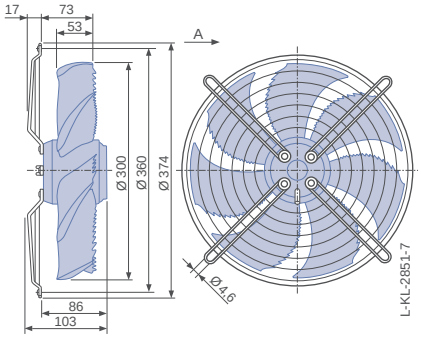

Design L - round full bell mouth, guard grille suction side

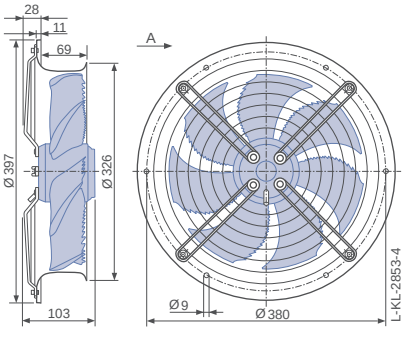

Performance data

Type	Characteristic curve	Voltage U V	Operating point	Current I A	Input power P_1 W	Speed n min^{-1}	Suction side sound power level L_{WA5} dB(A)
FN030-4E_.WC._7	I	230	①	0.46	110	1280	
		230*	②	**0.42***	**95***	**1330***	64
		230	③	0.35	80	1400	62
	II	170	④	0.46	75	970	
		170	⑤	0.40	70	1140	61
		170	⑥	0.33	55	1300	60
	III	135	⑦	0.39	50	680	
		135	⑧	0.38	50	830	55
		135	⑨	0.33	44	1100	57
	IV	110	⑩	0.33	36	520	
		110	⑪	0.33	34	600	47
		110	⑫	0.31	34	830	52

*rated data

Fan ordering information

Airflow direction A | **Airflow direction V**

Design	W (guard grille suction side)	D (guard grille suction side)	L (guard grille suction side)	K (guard grille pressure side)	I (guard grille pressure side)	H (guard grille pressure side)
			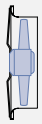			
Type	**FN030-4EW.WC.A7**	**FN030-4ED.WC.A7**	**FN030-4EL.WC.A7**	**FN030-4EK.WC.V7**	**FN030-4EI.WC.V7**	**FN030-4EH.WC.V7**
Article no.	**141633**	**141631**	**141632**	**141636**	**141634**	**141635**
Weight kg	3.70	3.60	5.10	3.80	3.60	5.10

Control technology

Frequency inverters Fcontrol 1~	Motor protection units 1~	Electronic voltage controllers 1~
		
Page 474	Page 518	Page 492

Airflow direction V

Design K - axial bolted, mounted for short bell mouth, guard grille pressure side

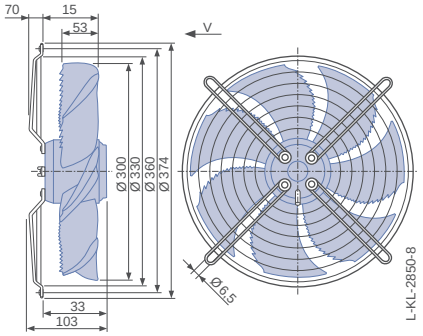

Design I - axial bolted, mounting for bell mouth flange, guard grille pressure side

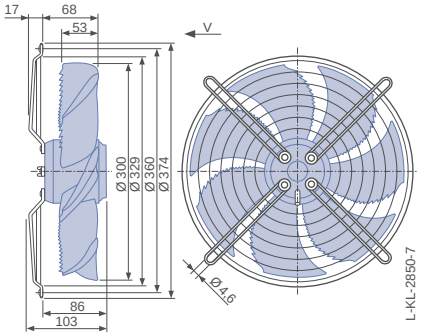

Design H - pipe sockets with a flange, guard grille pressure side

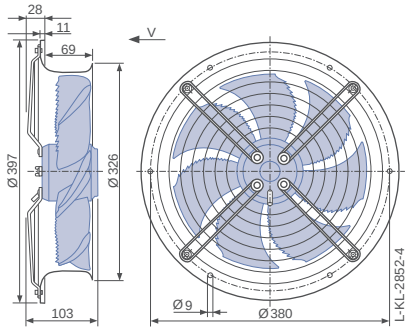

FE2owlet

for single phase alternating current, 4 pole

FN031-4E



Description

Motor technology: AC
Rated voltage U_N: **1~ 230 V***
Rated frequency f_N: **50 Hz*** (60Hz data available)
Input power P_1: **0.12 kW***
Rated current I_N: **0.54 A***
Rated speed n_N: **1330 min^{-1}***
Starting current I_A: 1.00 A
Current increase ΔI: 0 %
Service capacitor C_{400V}: 5.0 µF
Thermal class: **THCL155***
Min. permitted ambient temperature $t_{R(min)}$: -40 °C
Max. permitted ambient temperature $t_{R(max)}$: 70 °C
Electrical connection: Supply cable variable 45 cm
Number of blades: 7
Motor protection: thermal contact
Blades: High Performance Composite Material, uncoated,
Rotor: Aluminium, 1 coat paint, ultramarine blue
Conformity: CE
ErP-data
Not subject to the regulations of ErP directive (P_1< 125 W)
* Rated data

Characteristic curve

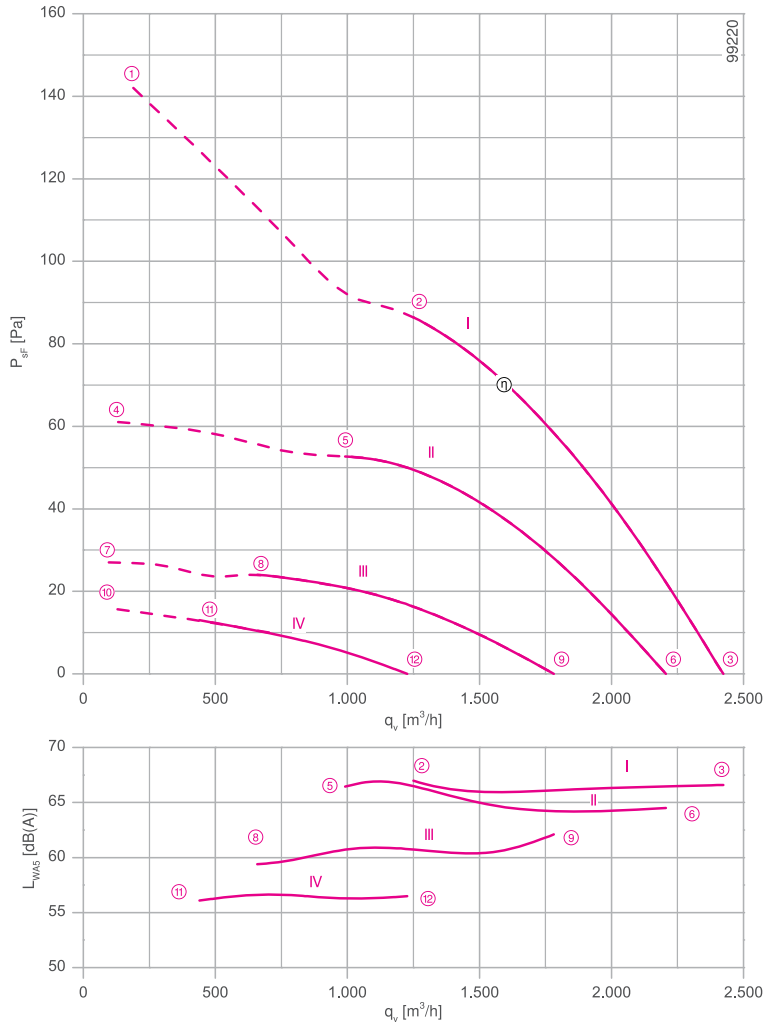

Measured in full bell mouth without guard grille in installation type A according to ISO 5801

Connection diagram Page 532
1360-177X

System components Page 430

Dimensions mm

Airflow direction A

Design D - axial bolted, suspension for full bell mouth, guard grille suction side

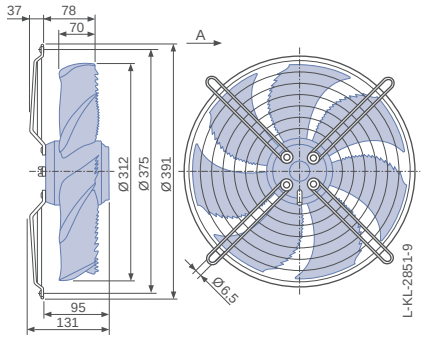

Design L - round full bell mouth, guard grille suction side

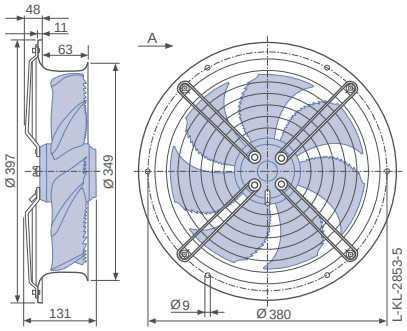

Airflow direction V

Design I - axial bolted, mounting for bell mouth flange, guard grille pressure side

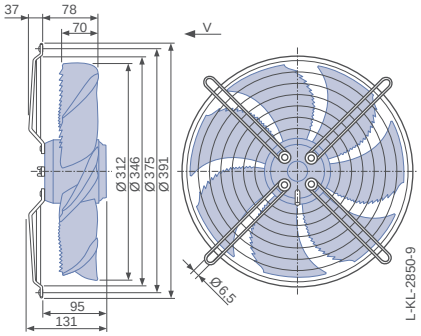

Performance data

Type	Characteristic curve	Voltage U V	Operating point	Current I A	Input power P_1 W	Speed n min^{-1}	Suction side sound power level L_{WA5} dB(A)
FN031-4E_.WD._7	I	230	①	0.64	140	1250	
		230*	②	**0.54***	**120***	**1330***	67
		230	③	0.44	100	1400	66
	II	170	④	0.62	100	860	
		170	⑤	0.56	95	1070	66
		170	⑥	0.44	75	1290	65
	III	135	⑦	0.52	70	580	
		135	⑧	0.50	70	720	59
		135	⑨	0.44	60	1050	62
	IV	110	⑩	0.42	46	450	
		110	⑪	0.42	46	520	56
		110	⑫	0.42	44	720	57

*rated data

Fan ordering information

Airflow direction A			Airflow direction V	
Design	D (guard grille suction side)	L (guard grille suction side)	I (guard grille pressure side)	H (guard grille pressure side)
		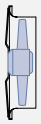		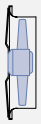
Type	**FN031-4ED.WD.A7**	**FN031-4EL.WD.A7**	**FN031-4EI.WD.V7**	**FN031-4EH.WD.V7**
Article no.	**161640**	**161641**	**161637**	**161638**
Weight kg	4.30	5.80	4.30	5.80

Control technology

Frequency inverters Fcontrol 1~	Motor protection units 1~	Electronic voltage controllers 1~
		
Page 474	Page 518	Page 492

Design H - pipe sockets with a flange, guard grille pressure side

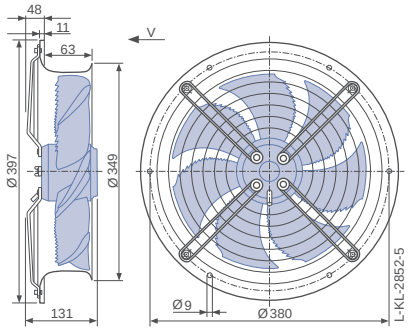

FE2owlet

for single phase alternating current, 4 pole

FN031-4E



Description

Motor technology: AC
Rated voltage U_N: **1~ 230 V±10 %***
Rated frequency f_N: **50 Hz*** (60Hz data available)
Input power P_1: **120 W***
Rated current I_N: **0.62 A***
Rated speed n_N: **1440 min^{-1}***
Starting current I_A: 2.40 A
Current increase ΔI: 35 %
Service capacitor C_{400V}: 3.0 µF
Thermal class: **THCL155***
Min. permitted ambient temperature $t_{R(min)}$: -25 °C
Max. permitted ambient temperature $t_{R(max)}$: 70 °C
Electrical connection: Terminal box
Number of blades: 7
Protection class: IP54
Motor protection: thermal contact
Blades: High Performance Composite Material, uncoated,
Rotor: Aluminium, 1 coat paint, jet black
Conformity: CE
ErP-data
Not subject to the regulations of ErP directive (P_1< 125 W)
* Rated data

Characteristic curve

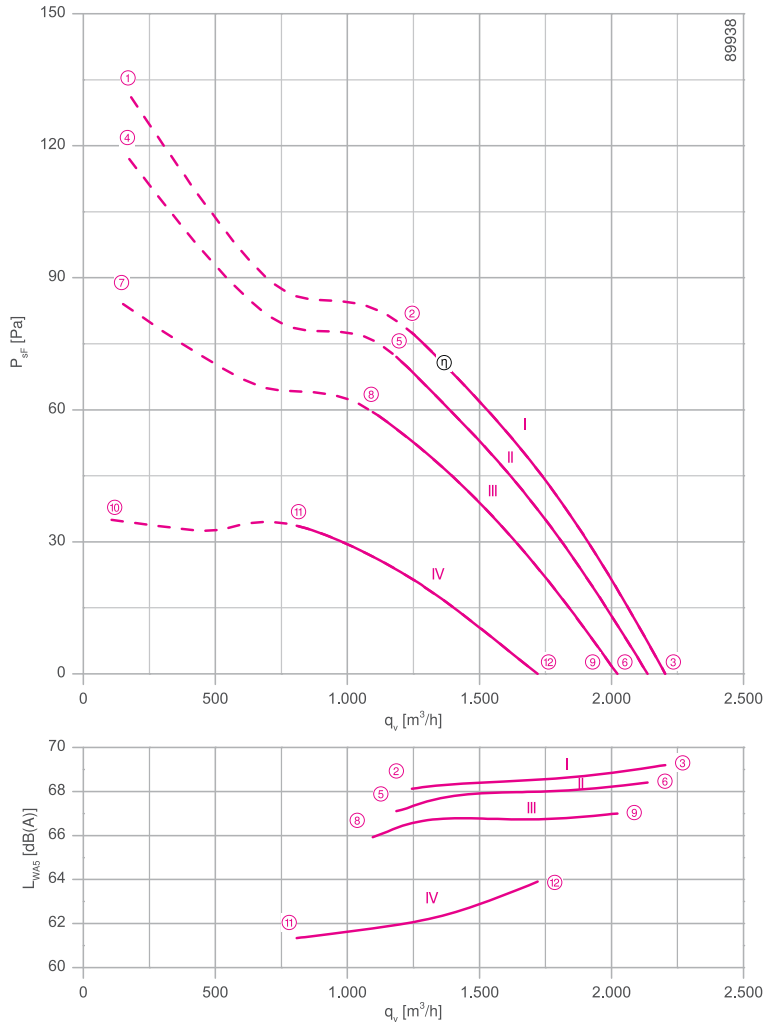

Measured in full bell mouth without guard grille in installation type A according to ISO 5801

Connection diagram	Page 531 1360-104XA
System components	Page 430

Dimensions mm

Airflow direction V

Design K - axial bolted, mounted for short bell mouth, guard grille pressure side

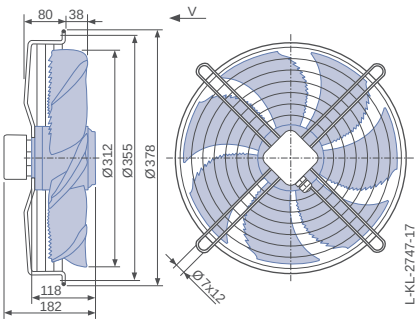

Performance data

Type	Characteristic curve	Voltage U V	Operating point	Current I A	Input power P_1 W	Speed n min^{-1}	Suction side sound power level L_{WA5} dB(A)
FN031-4E_.0F._7P2	I	230	①	0.66	130	1430	
		230*	②	**0.61***	**120***	**1440***	68
		230	③	0.58	110	1450	69
	II	170	④	0.68	110	1350	
		170	⑤	0.58	95	1390	67
		170	⑥	0.50	80	1410	68
	III	135	⑦	0.86	110	1150	
		135	⑧	0.70	90	1270	66
		135	⑨	0.58	75	1340	67
	IV	110	⑩	0.92	90	740	
		110	⑪	0.84	85	950	61
		110	⑫	0.72	75	1140	64

*rated data

Fan ordering information

Airflow direction V

Design	K (guard grille pressure side)
	
Type	**FN031-4EK.0F.V7P2**
Article no.	**159478**
Weight kg	4.90

Control technology

Frequency inverters Fcontrol 1~	Motor protection units 1~	Electronic voltage controllers 1~
		
Page 474	Page 518	Page 492

FE2owlet

for three phase alternating current, 4 pole

FN031-4D



Description

Motor technology: AC
Rated voltage U_N: **3~ 230/400 V (Δ/Y) ±10 %***
Rated frequency f_N: **50 Hz*** (60Hz data available)
Input power P_1: **120 W***
Rated current I_N: **0.68/0.39 A***
Rated speed n_N: **1450 min^{-1}***
Starting current I_A: 2.80 / 1.70 A
Current increase ΔI: 0 %
Thermal class: **THCL155***
Min. permitted ambient temperature $t_{R(min)}$: -40 °C
Max. permitted ambient temperature $t_{R(max)}$: 70 °C
Electrical connection: Terminal box
Number of blades: 7
Protection class: IP54
Motor protection: thermal contact
Blades: High Performance Composite Material, uncoated,
Rotor: Aluminium, 1 coat paint, jet black
Conformity: CE
ErP-data
Not subject to the regulations of ErP directive (P_1< 125 W)
* Rated data

Characteristic curve

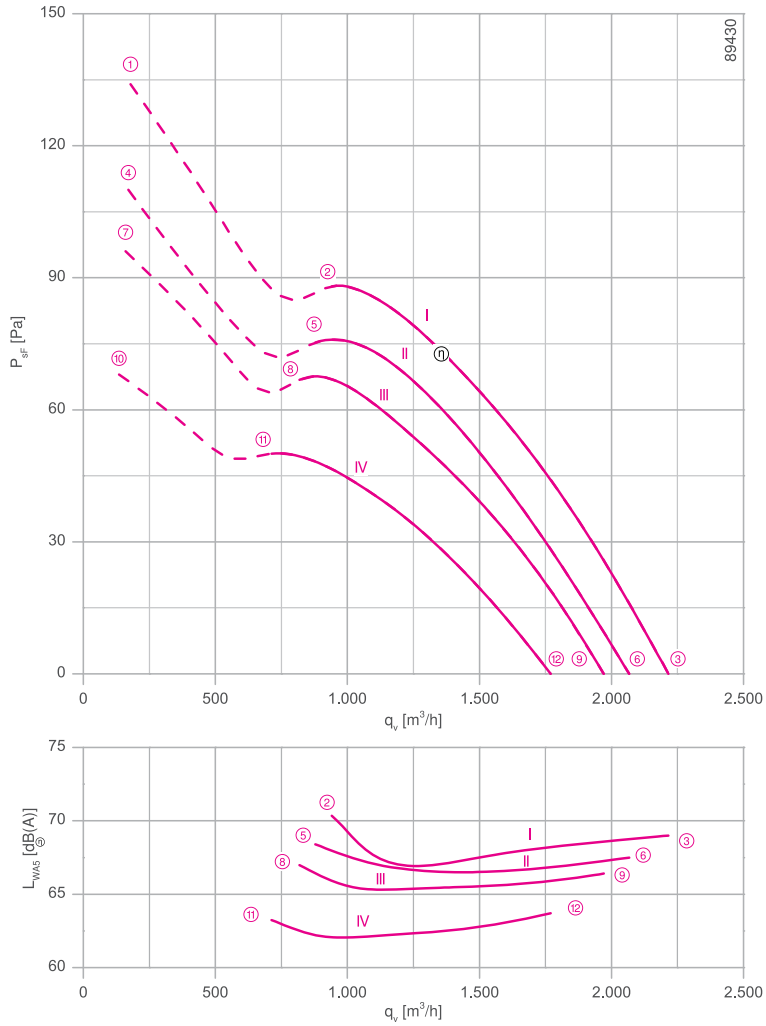

Measured in full bell mouth without guard grille in installation type A according to ISO 5801

Connection diagram Page 531
1360-106XA

System components Page 430

Dimensions mm

Airflow direction V

Design K - axial bolted, mounted for short bell mouth, guard grille pressure side

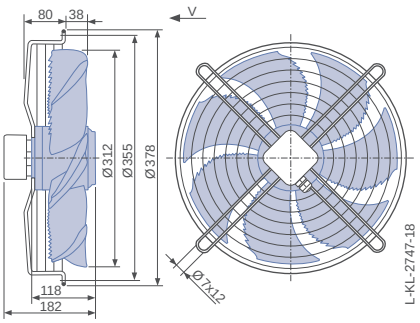

Performance data

Type	Characteristic curve	Voltage U V	Operating point	Current I A	Input power P_1 W	Speed n min^{-1}	Suction side sound power level L_{WA5} dB(A)
FN031-4D_.0F._7P2	I	400	①	0.40	140	1440	
		400*	②	**0.39***	**120***	**1450***	70
		400	③	0.39	110	1460	69
	II	230	④	0.30	100	1310	
		230	⑤	0.28	90	1340	69
		230	⑥	0.25	75	1380	68
	III	190	⑦	0.32	90	1220	
		190	⑧	0.29	80	1260	67
		190	⑨	0.25	70	1320	66
	IV	145	⑩	0.33	75	1030	
		145	⑪	0.30	70	1090	63
		145	⑫	0.27	60	1180	64

*rated data

Fan ordering information

Airflow direction V

Design	K (guard grille pressure side)



Type	**FN031-4DK.0F.V7P2**
Article no.	**159471**
Weight kg	4.90

Control technology

Frequency inverters Fcontrol 3~	Motor protection units 3~	Electronic voltage controllers 3~
		
Page 480	Page 518	Page 506

FE2owlet

for single phase alternating current, 4 pole

FN035-4E



Description

Motor technology: AC
Rated voltage U_N: **1~ 230 V***
Rated frequency f_N: **50 Hz*** (60Hz data available)
Input power P_1: **0.13 kW***
Rated current I_N: **0.56 A***
Rated speed n_N: **1070 min^{-1}***
Starting current I_A: 0.70 A
Current increase ΔI: 0 %
Service capacitor C_{400V}: 5.0 µF
Thermal class: **THCL155***
Min. permitted ambient temperature $t_{R(min)}$: -40 °C
Max. permitted ambient temperature $t_{R(max)}$: 60 °C
Electrical connection: Supply cable variable 45 cm
Number of blades: 7
Motor protection: thermal contact
Blades: High Performance Composite Material, uncoated,
Rotor: Aluminium, 1 coat paint, ultramarine blue
Conformity: CE
ErP-data
Not subject to the regulations of ErP directive (P_1< 125 W)
* Rated data

Characteristic curve

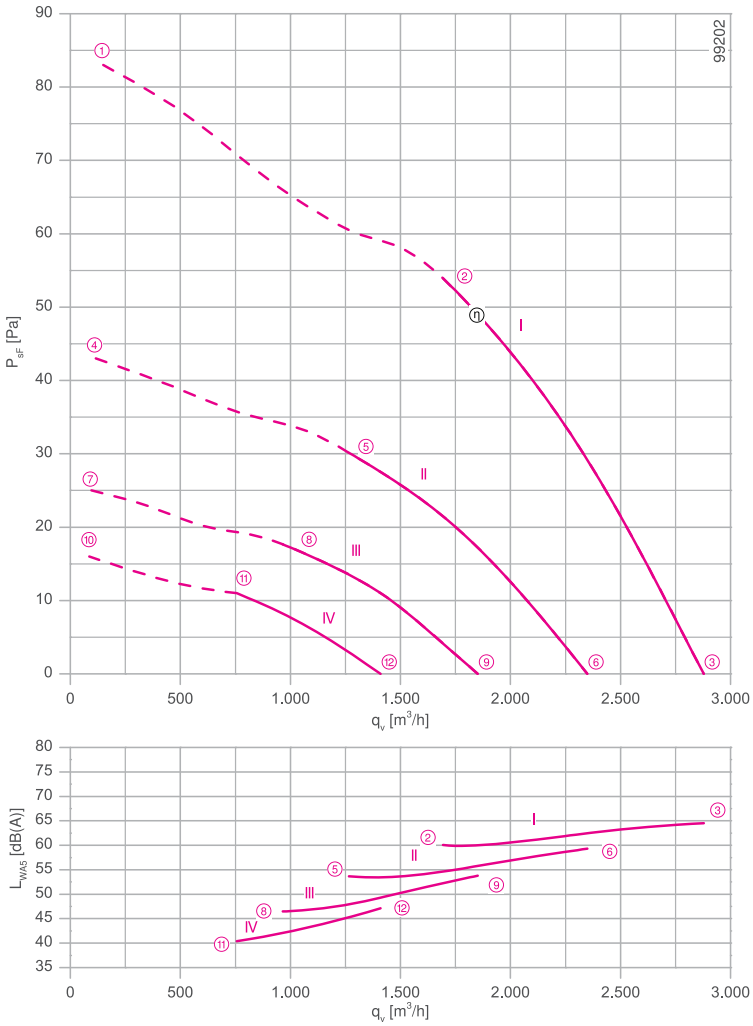

Measured in full bell mouth without guard grille in installation type A according to ISO 5801

Connection diagram Page 532
1360-177X

System components Page 430

Dimensions mm

Airflow direction A

Design W - axial bolted, mounting for short bell mouth, guard grille suction side

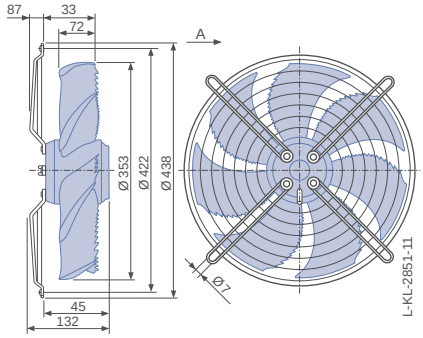

Design D - axial bolted, suspension for full bell mouth, guard grille suction side

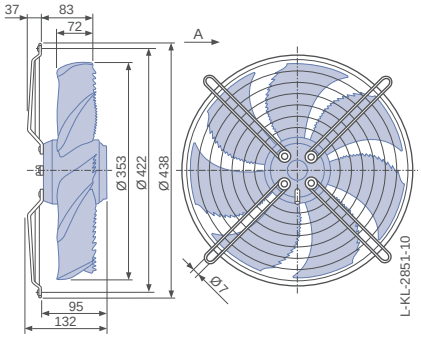

Design L - round full bell mouth, guard grille suction side

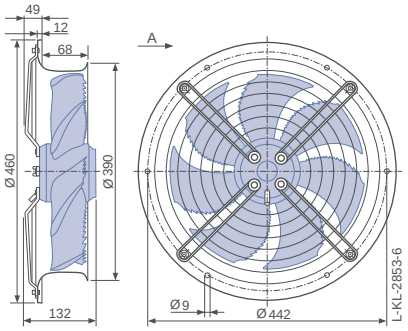

Performance data

Type	Characteristic curve	Voltage U V	Operating point	Current I A	Input power P_1 W	Speed n min^{-1}	Suction side sound power level L_{WA5} dB(A)
FN035-4E_.WD._7	I	230	①	0.60	140	910	
		230*	②	**0.56***	**130***	**1070***	60
		230	③	0.50	110	1220	65
	II	170	④	0.48	80	660	
		170	⑤	0.46	80	810	54
		170	⑥	0.44	70	1000	59
	III	135	⑦	0.39	55	510	
		135	⑧	0.38	50	620	47
		135	⑨	0.37	50	780	54
	IV	110	⑩	0.32	36	400	
		110	⑪	0.32	36	490	40
		110	⑫	0.32	34	610	47

*rated data

Fan ordering information

Airflow direction A | **Airflow direction V**

Design	W (guard grille suction side)	D (guard grille suction side)	L (guard grille suction side)	K (guard grille pressure side)	I (guard grille pressure side)	H (guard grille pressure side)
			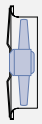			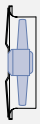
Type	**FN035-4EW.WD.A7**	**FN035-4ED.WD.A7**	**FN035-4EL.WD.A7**	**FN035-4EK.WD.V7**	**FN035-4EI.WD.V7**	**FN035-4EH.WD.V7**
Article no.	**162549**	**162547**	**162548**	**162545**	**162543**	**162544**
Weight kg	4.90	4.50	6.50	4.90	4.50	6.50

Control technology

Frequency inverters Fcontrol 1~	Motor protection units 1~	Electronic voltage controllers 1~
		
Page 474	Page 518	Page 492

Airflow direction V

Design K - axial bolted, mounted for short bell mouth, guard grille pressure side

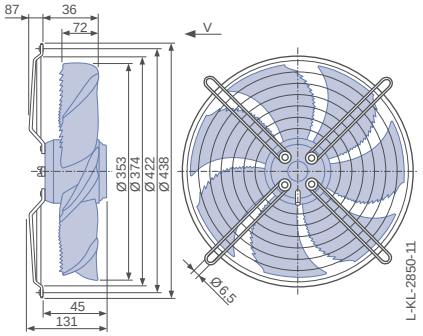

Design I - axial bolted, mounting for bell mouth flange, guard grille pressure side

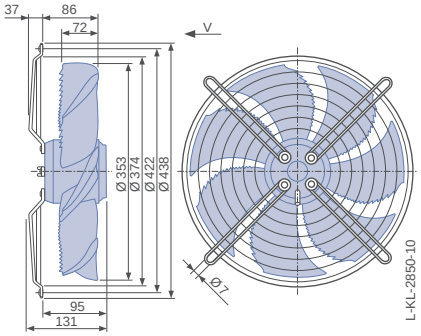

Design H - pipe sockets with a flange, guard grille pressure side

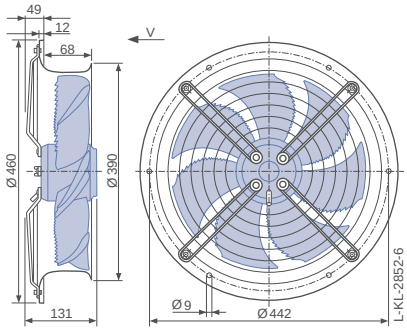

FE2owlet

for single phase alternating current, 4 pole

FN035-4E



Description

Motor technology: AC
Rated voltage U_N: **1~ 230 V±10 %***
Rated frequency f_N: **50 Hz*** (60Hz data available)
Input power P_1: **150 W***
Rated current I_N: **0.65 A***
Rated speed n_N: **1390 min^{-1}***
Starting current I_A: 2.00 A
Current increase ΔI: 35 %
Service capacitor C_{400V}: 3.0 µF
Thermal class: **THCL155***
Min. permitted ambient temperature $t_{R(min)}$: -25 °C
Max. permitted ambient temperature $t_{R(max)}$: 70 °C
Electrical connection: Terminal box
Number of blades: 7
Protection class: IP54
Motor protection: thermal contact
Blades: High Performance Composite Material, uncoated,
Rotor: Aluminium, 1 coat paint, jet black
Conformity: ErP 2015, CE
ErP-data
Efficiency η_{statA}: 29.2 %
Efficiency: N_{actual} = 40.9 / N_{target} = 40**
* Rated data
**ErP 2015

Connection diagram Page 531
for airflow direction A 1360-104XB
for airflow direction V 1360-104XA

System components Page 430

Characteristic curve

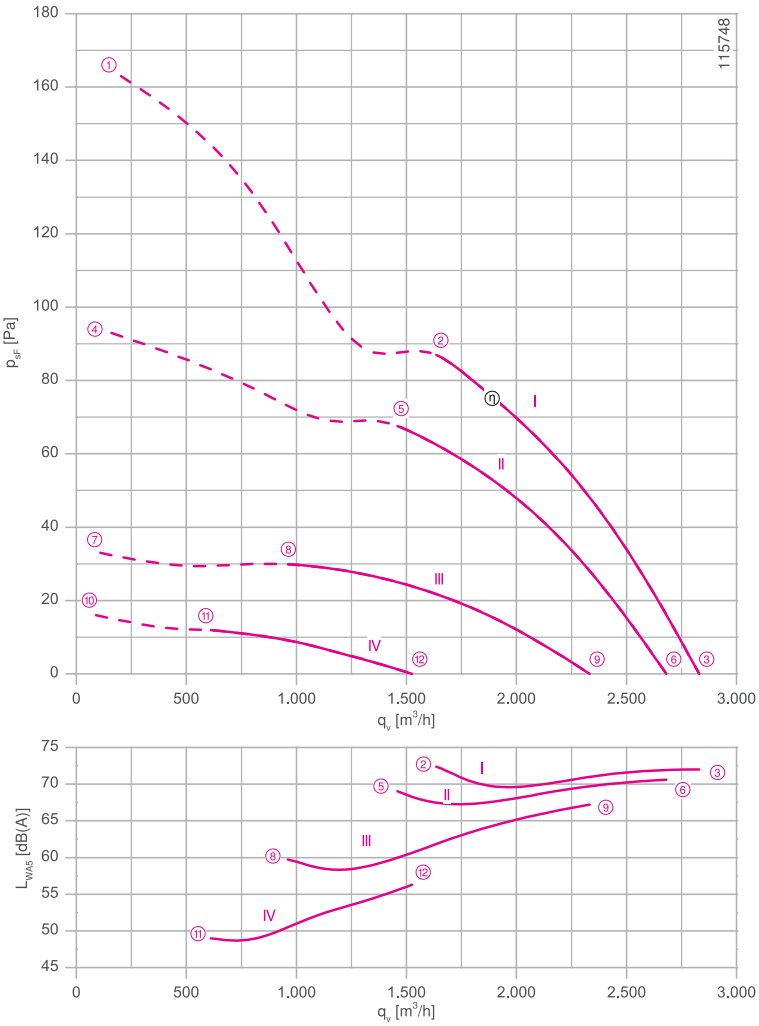

Measured in full bell mouth without guard grille in installation type A according to ISO 5801

Dimensions mm

Airflow direction A

Design W - axial bolted, mounting for short bell mouth, guard grille suction side

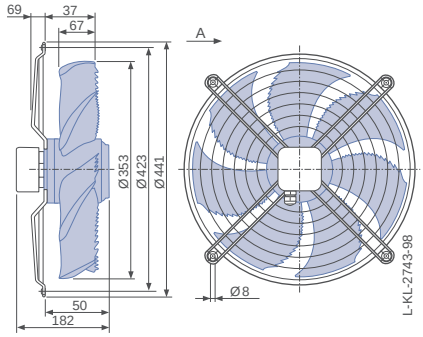

Design D - axial bolted, suspension for full bell mouth, guard grille suction side

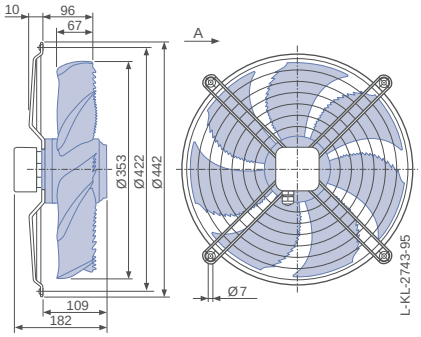

Design Q - square full bell mouth, guard grille suction side

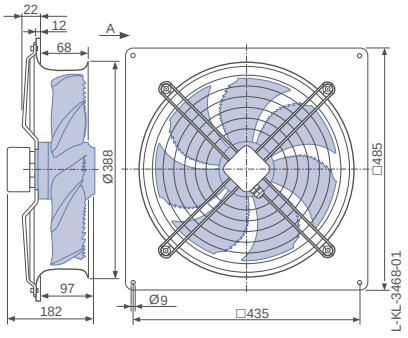

Performance data

Type	Characteristic curve	Voltage U V	Operating point	Current I A	Input power P_1 W	Speed n min^{-1}	Suction side sound power level L_{WA5} dB(A)
FN035-4E_.0F._7P3	I	230	①	0.82	180	1350	
		230*	②	**0.66***	**150***	**1390***	72
		230	③	0.52	110	1430	72
	II	170	④	1.05	170	1030	
		170	⑤	0.80	130	1240	69
		170	⑥	0.56	95	1360	71
	III	135	⑦	0.96	120	610	
		135	⑧	0.90	120	820	60
		135	⑨	0.70	90	1180	67
	IV	110	⑩	0.80	80	430	
		110	⑪	0.80	80	520	49
		110	⑫	0.74	75	770	56

*rated data

Fan ordering information

Airflow direction A | **Airflow direction V**

Design	W (guard grille suction side)	D (guard grille suction side)	Q (guard grille suction side)	K (guard grille pressure side)	Q (guard grille pressure side)
					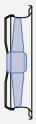
Type	**FN035-4EW.0F.A7P3**	**FN035-4ED.0F.A7P3**	**FN035-4EQ.0F.A7P3**	**FN035-4EK.0F.V7P3**	**FN035-4EQ.0F.V7P3**
Article no.	**171264**	**171263**	**171265**	**171261**	**171262**
Weight kg	5.10	4.80	7.60	5.30	7.80

Control technology

Frequency inverters Fcontrol 1~	Motor protection units 1~	Electronic voltage controllers 1~
		
Page 474	Page 518	Page 492

Airflow direction V

Design K - axial bolted, mounted for short bell mouth, guard grille pressure side

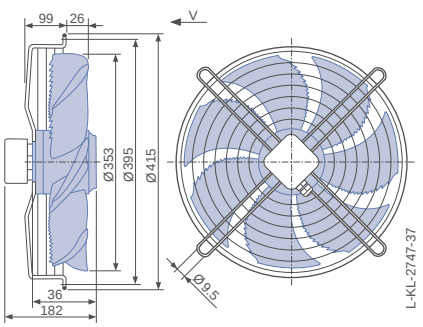

Design Q - square full bell mouth, guard grille pressure side

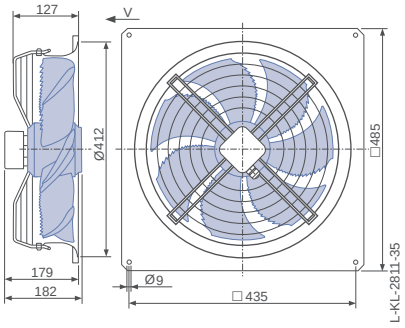

FE2owlet

for single phase alternating current, 6 pole

FN035-6E



Description

Motor technology: AC
Rated voltage U_N: **1~ 230 V±10 %***
Rated frequency f_N: **50 Hz*** (60Hz data available)
Input power P_1: **85 W***
Rated current I_N: **0.39 A***
Rated speed n_N: **930 min^{-1}***
Starting current I_A: 0.75 A
Current increase ΔI: 0 %
Service capacitor C_{400V}: 3.0 µF
Thermal class: **THCL155***
Min. permitted ambient temperature $t_{R(min)}$: -25 °C
Max. permitted ambient temperature $t_{R(max)}$: 70 °C
Electrical connection: Terminal box
Number of blades: 7
Protection class: IP54
Motor protection: thermal contact
Blades: High Performance Composite Material, uncoated,
Rotor: Aluminium, 1 coat paint, jet black
Conformity: CE
ErP-data
Not subject to the regulations of ErP directive (P_1< 125 W)
* Rated data

Characteristic curve

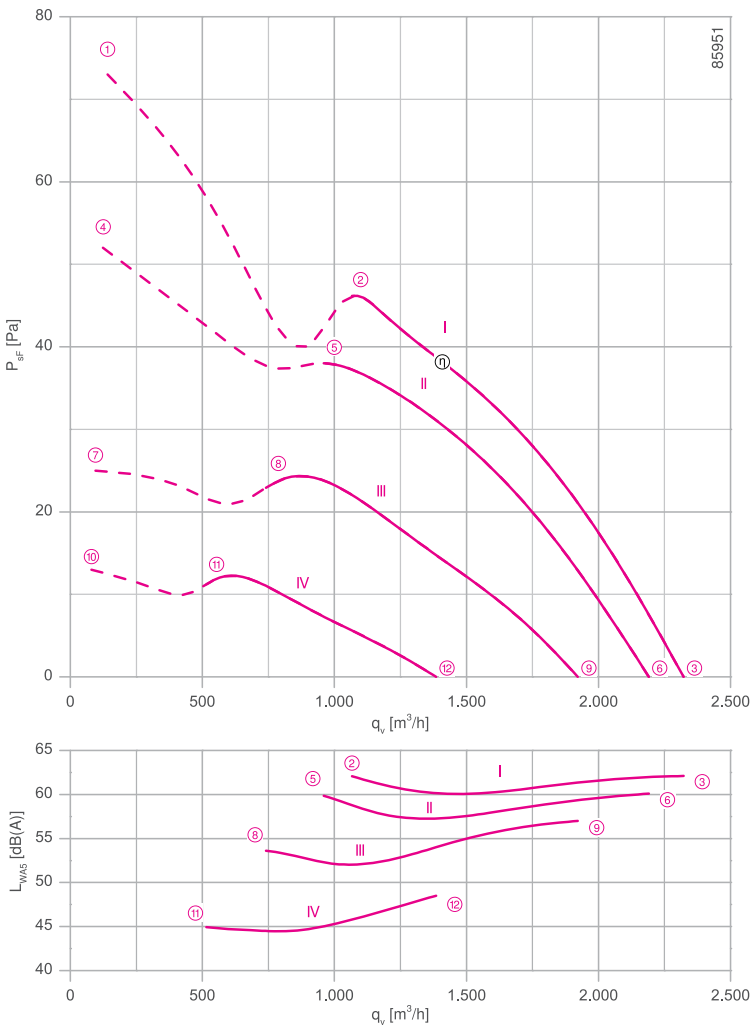

Measured in full bell mouth without guard grille in installation type A according to ISO 5801

Connection diagram Page 531
for airflow direction A 1360-104XB
for airflow direction V 1360-104XA

System components Page 430

Dimensions mm

Airflow direction A

Design W - axial bolted, mounting for short bell mouth, guard grille suction side

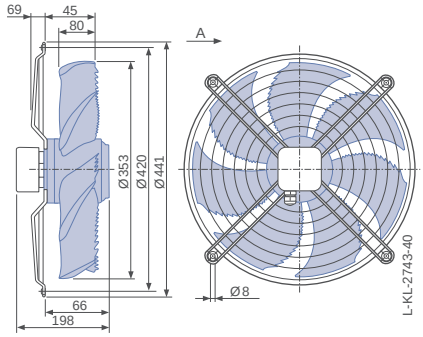

Design D - axial bolted, suspension for full bell mouth, guard grille suction side

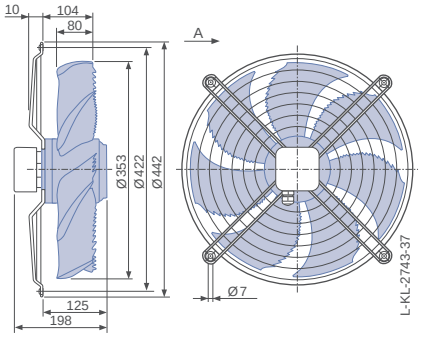

Design L - round full bell mouth, guard grille suction side

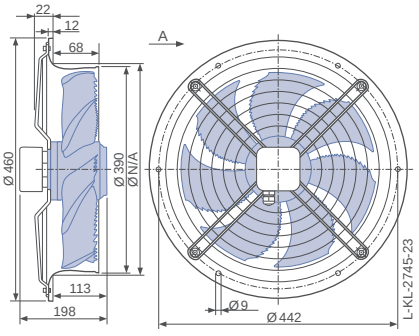

Performance data

Type	Characteristic curve	Voltage U V	Operating point	Current I A	Input power P_1 W	Speed n min⁻¹	Suction side sound power level L_{WA5} dB(A)
FN035-6E_.0C._7P2	I	230	①	0.42	95	900	
		230*	②	**0.39***	**85***	**930***	62
		230	③	0.37	80	940	62
	II	170	④	0.42	70	760	
		170	⑤	0.36	60	850	60
		170	⑥	0.31	55	890	60
	III	135	⑦	0.38	50	530	
		135	⑧	0.36	48	670	54
		135	⑨	0.32	42	780	57
	IV	110	⑩	0.33	36	390	
		110	⑪	0.32	34	470	45
		110	⑫	0.31	34	570	49

*rated data

Fan ordering information

Airflow direction A | **Airflow direction V**

Design	W (guard grille suction side)	D (guard grille suction side)	L (guard grille suction side)	K (guard grille pressure side)	I (guard grille pressure side)	H (guard grille pressure side)
						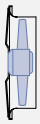
Type	**FN035-6EW.0C.A7P2**	**FN035-6ED.0C.A7P2**	**FN035-6EL.0C.A7P2**	**FN035-6EK.0C.V7P2**	**FN035-6EI.0C.V7P2**	**FN035-6EH.0C.V7P2**
Article no.	**155897**	**155895**	**155896**	**155901**	**155899**	**155900**
Weight kg	4.50	4.10	6.10	4.60	4.10	6.10

Control technology

Frequency inverters Fcontrol 1~	Motor protection units 1~	Electronic voltage controllers 1~
		
Page 474	Page 518	Page 492

Airflow direction V

Design K - axial bolted, mounted for short bell mouth, guard grille pressure side

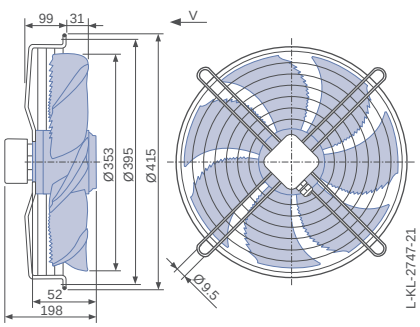

Design I - axial bolted, mounting for bell mouth flange, guard grille pressure side

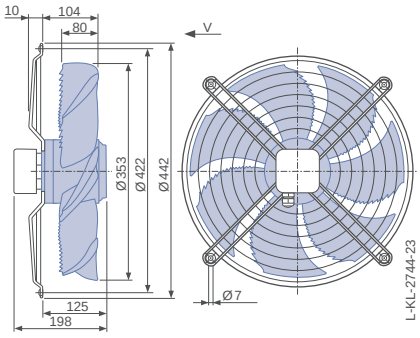

Design H - pipe sockets with a flange, guard grille pressure side

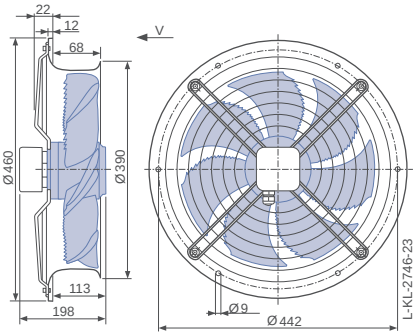

FE2owlet

for three phase alternating current, 4-4 pole

FN035-VD



Description

Motor technology: AC
Rated voltage U_N: **3~ 400 V (Δ/Y) ±10 %***
Rated frequency f_N: **50 Hz*** (60Hz data available)
Input power P_1: **190/140 W***
Rated current I_N: **0.40/0.23 A***
Rated speed n_N: **1390/1170 min^{-1}***
Starting current I_A: 1.60 / 0.55 A
Current increase ΔI: 0 %
Thermal class: **THCL155***
Min. permitted ambient temperature $t_{R(min)}$: -40 °C
Max. permitted ambient temperature $t_{R(max)}$: 70 °C
Electrical connection: Terminal box
Number of blades: 7
Protection class: IP54
Motor protection: thermal contact
Blades: High Performance Composite Material, uncoated,
Rotor: Aluminium, 1 coat paint, jet black
Conformity: ErP 2015, CE
ErP-data
Efficiency η_{statA}: 29.3 %
Efficiency: N_{actual} = 40.3 / N_{target} = 40**
* Rated data
**ErP 2015

Characteristic curve

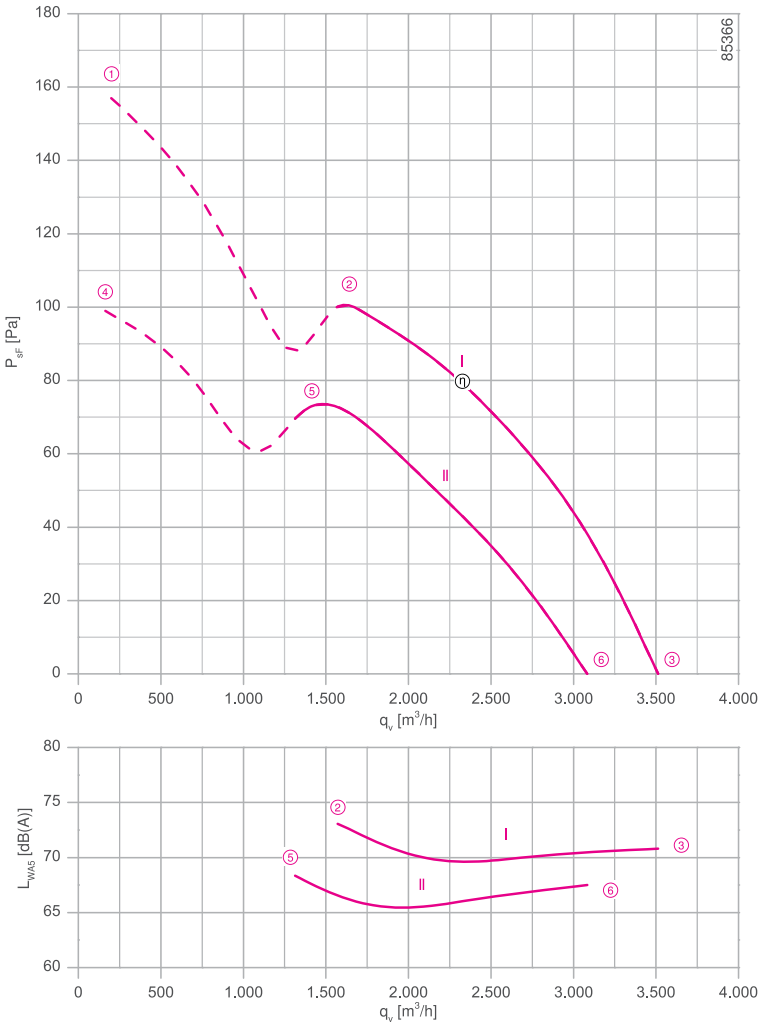

Measured in full bell mouth without guard grille in installation type A according to ISO 5801

Connection diagram Page 531
for airflow direction A 1360-108XB
for airflow direction V 1360-108XA

System components Page 430

Dimensions mm

Airflow direction A

Design W - axial bolted, mounting for short bell mouth, guard grille suction side

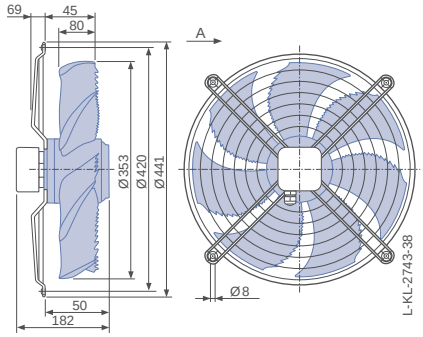

Design D - axial bolted, suspension for full bell mouth, guard grille suction side

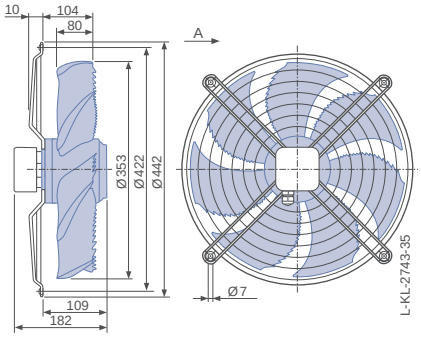

Design L - round full bell mouth, guard grille suction side

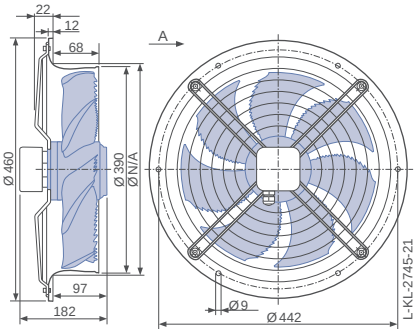

Performance data

Type	Connection	Characteristic curve	Voltage U V	Operating point	Current I A	Input power P_1 W	Speed n min^{-1}	Suction side sound power level L_{WA5} dB(A)
FN035-VD_.0F._7P2	Δ	I	400	①	0.44	230	1360	
			400*	②	**0.40***	**190***	**1390***	73
			400	③	0.37	150	1420	71
	Y	II	400	④	0.27	170	1080	
			400*	⑤	**0.23***	**140***	**1170***	68
			400	⑥	0.19	120	1240	68

*rated data

Fan ordering information

Airflow direction A | **Airflow direction V**

Design	W (guard grille suction side)	D (guard grille suction side)	L (guard grille suction side)	K (guard grille pressure side)	I (guard grille pressure side)	H (guard grille pressure side)
						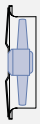
Type	**FN035-VDW.0F.A7P2**	**FN035-VDD.0F.A7P2**	**FN035-VDL.0F.A7P2**	**FN035-VDK.0F.V7P2**	**FN035-VDI.0F.V7P2**	**FN035-VDH.0F.V7P2**
Article no.	**155888**	**155886**	**155887**	**155892**	**155890**	**155891**
Weight kg	5.10	4.80	6.80	5.30	4.70	6.80

Control technology

Frequency inverters Fcontrol 3~	Motor protection units 3~	Electronic voltage controllers 3~
		
Page 480	Page 518	Page 506

Airflow direction V

Design K - axial bolted, mounted for short bell mouth, guard grille pressure side

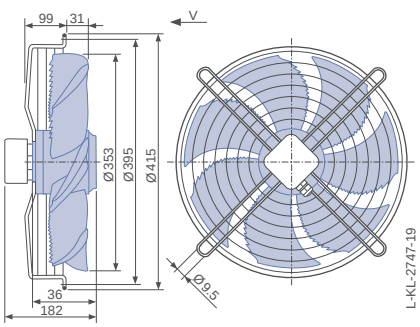

Design I - axial bolted, mounting for bell mouth flange, guard grille pressure side

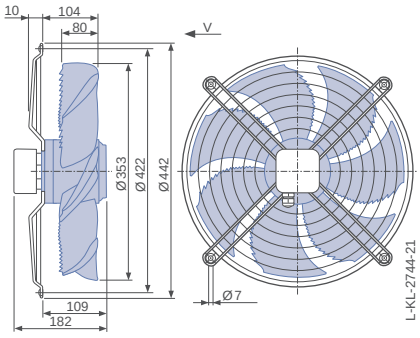

Design H - pipe sockets with a flange, guard grille pressure side

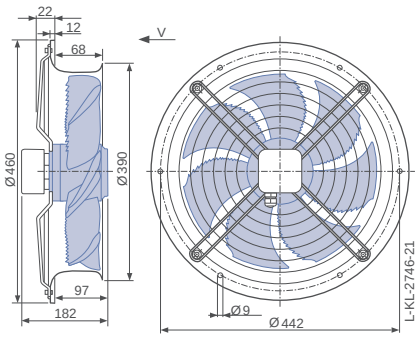

FE2owlet

for single phase alternating current, 4 pole

FN040-4E



Description

Motor technology: AC
Rated voltage U_N: **1~ 230 V±10 %***
Rated frequency f_N: **50 Hz*** (60Hz data available)
Input power P_1: **240 W***
Rated current I_N: **1.05 A***
Rated speed n_N: **1340 min^{-1}***
Starting current I_A: 2.40 A
Current increase ΔI: 15 %
Service capacitor C_{400V}: 5.0 µF
Thermal class: **THCL155***
Min. permitted ambient temperature $t_{R(min)}$: -25 °C
Max. permitted ambient temperature $t_{R(max)}$: 65 °C
Electrical connection: Terminal box
Number of blades: 7
Protection class: IP54
Motor protection: thermal contact
Blades: High Performance Composite Material, uncoated,
Rotor: Aluminium, 1 coat paint, jet black
Conformity: ErP 2015, CE
ErP-data
Efficiency η_{statA}: 31.1 %
Efficiency: N_{actual} = 41.3 / N_{target} = 40**
* Rated data
**ErP 2015

Connection diagram Page 531
for airflow direction A 1360-104XB
for airflow direction V 1360-104XA

System components Page 430

Characteristic curve

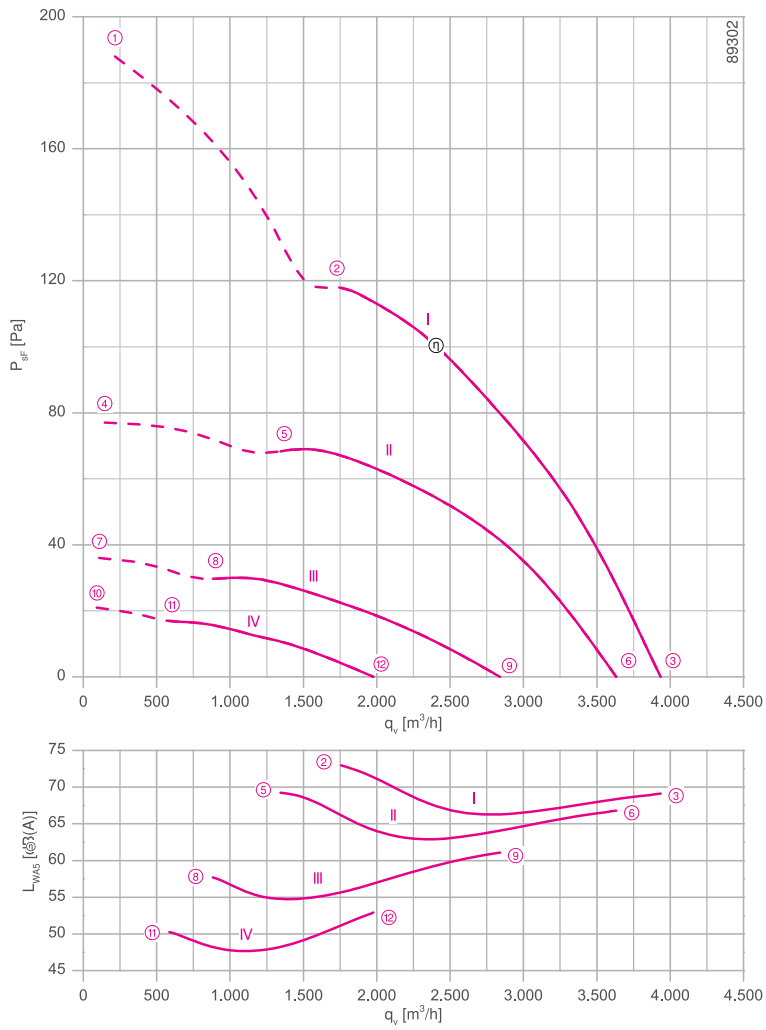

Measured in full bell mouth without guard grille in installation type A according to ISO 5801

Dimensions mm

Airflow direction A

Design W - axial bolted, mounting for short bell mouth, guard grille suction side

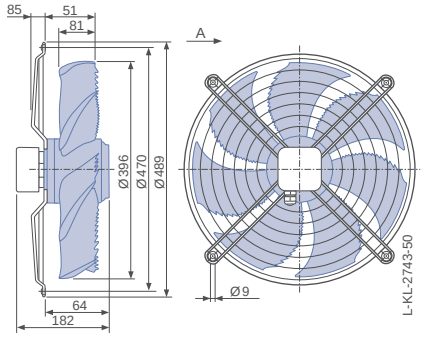

Design D - axial bolted, suspension for full bell mouth, guard grille suction side

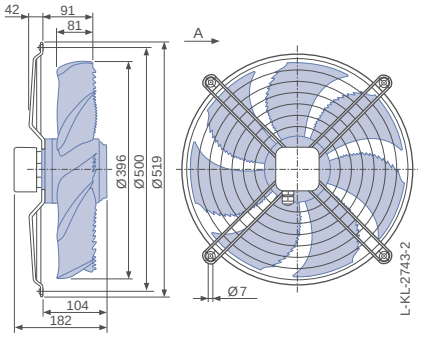

Design L - round full bell mouth, guard grille suction side

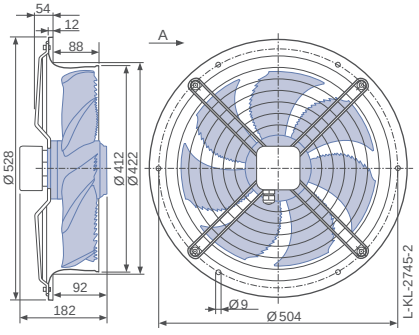

Performance data

Type	Characteristic curve	Voltage U V	Operating point	Current I A	Input power P_1 W	Speed n min^{-1}	Suction side sound power level L_{WA5} dB(A)
FN040-4E_.0F._7P1	I	230	①	1.30	300	1260	
		230*	②	**1.05***	**240***	**1340***	73
		230	③	0.80	180	1410	69
	II	170	④	1.35	220	810	
		170	⑤	1.20	200	1030	69
		170	⑥	0.86	150	1310	67
	III	135	⑦	1.10	150	550	
		135	⑧	1.10	140	690	57
		135	⑨	0.96	130	1020	61
	IV	110	⑩	0.94	100	430	
		110	⑪	0.92	95	510	50
		110	⑫	0.88	95	710	53

*rated data

Fan ordering information

Airflow direction A | **Airflow direction V**

Design	W (guard grille suction side)	D (guard grille suction side)	L (guard grille suction side)	K (guard grille pressure side)	I (guard grille pressure side)	H (guard grille pressure side)
			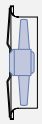			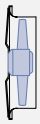
Type	**FN040-4EW.0F.A7P1**	**FN040-4ED.0F.A7P1**	**FN040-4EL.0F.A7P1**	**FN040-4EK.0F.V7P1**	**FN040-4EI.0F.V7P1**	**FN040-4EH.0F.V7P1**
Article no.	**156650**	**152722**	**152723**	**152728**	**152726**	**152727**
Weight kg	5.60	5.10	7.80	5.50	5.10	7.80

Control technology

Frequency inverters Fcontrol 1~	Motor protection units 1~	Electronic voltage controllers 1~
		
Page 474	Page 518	Page 492

Airflow direction V

Design K - axial bolted, mounted for short bell mouth, guard grille pressure side

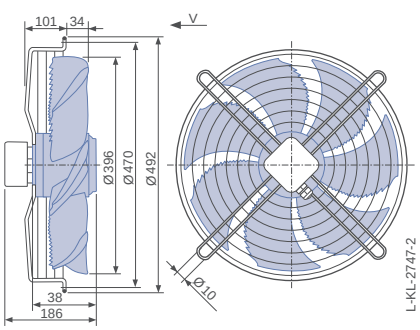

Design I - axial bolted, mounting for bell mouth flange, guard grille pressure side

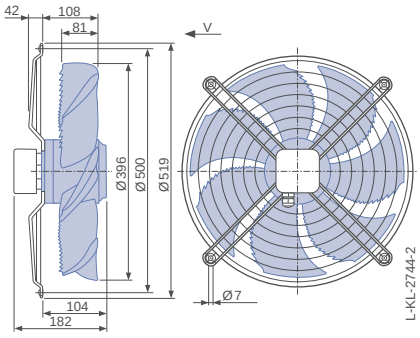

Design H - pipe sockets with a flange, guard grille pressure side

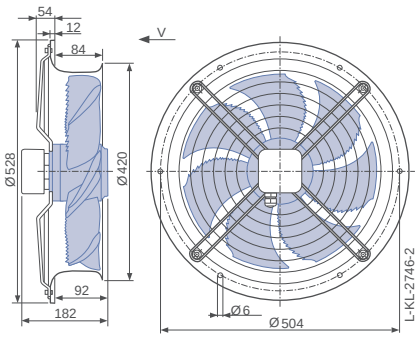

FE2owlet

for single phase alternating current, 4 pole

FN040-4E



Description

Motor technology: AC
Rated voltage U_N: **1~ 230 V±10 %***
Rated frequency f_N: **50 Hz***
Input power P_1: **260 W***
Rated current I_N: **1.15 A***
Rated speed n_N: **1320 min^{-1}***
Starting current I_A: 2.40 A
Current increase ΔI: 10 %
Service capacitor C_{400V}: 5.0 µF
Thermal class: **THCL155***
Min. permitted ambient temperature $t_{R(min)}$: -25 °C
Max. permitted ambient temperature $t_{R(max)}$: 55 °C
Electrical connection: Terminal box
Number of blades: 7
Protection class: IP54
Motor protection: thermal contact
Blades: High Performance Composite Material, uncoated,
Rotor: Aluminium, 1 coat paint, jet black
Conformity: ErP 2015, CE
ErP-data
Efficiency η_{statA}: 30.0 %
Efficiency: N_{actual} = 40.1 / N_{target} = 40**
* Rated data
**ErP 2015

Characteristic curve

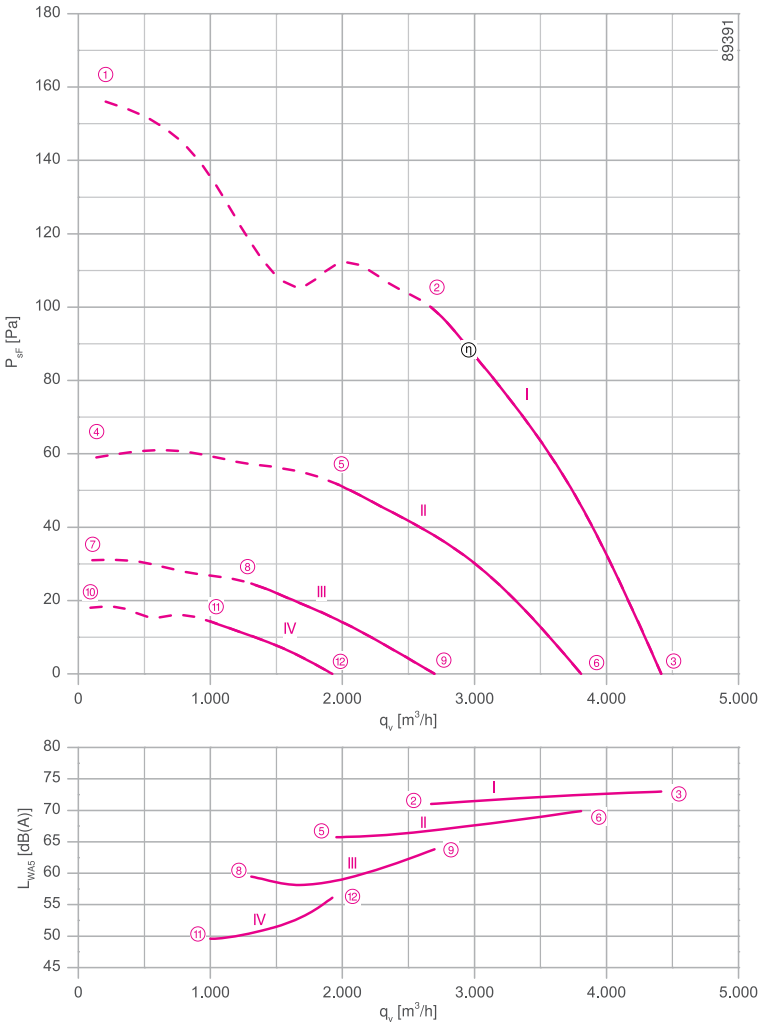

Measured in full bell mouth without guard grille in installation type A according to ISO 5801

Connection diagram Page 531
for airflow direction A 1360-104XB
for airflow direction V 1360-104XA

System components Page 430

Dimensions mm

Airflow direction A

Design D - axial bolted, suspension for full bell mouth, guard grille suction side

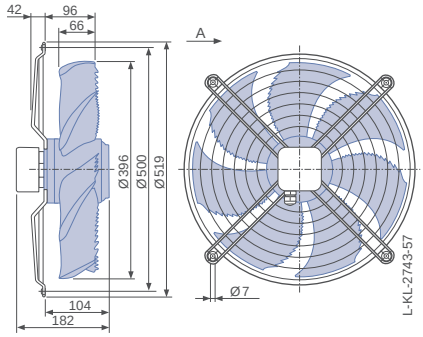

Airflow direction V

Design K - axial bolted, mounted for short bell mouth, guard grille pressure side

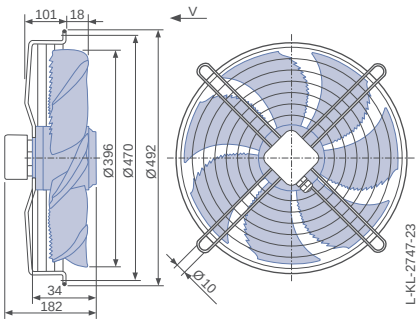

Performance data

Type	Characteristic curve	Voltage U V	Operating point	Current I A	Input power P_1 W	Speed n min^{-1}	Suction side sound power level L_{WA5} dB(A)
FN040-4E_.0F._7P2	I	230	①	1.45	330	1190	
		230*	②	**1.15***	**260***	**1320***	71
		230	③	0.92	210	1380	73
	II	170	④	1.35	220	730	
		170	⑤	1.25	210	960	66
		170	⑥	1.05	180	1200	70
	III	135	⑦	1.10	150	540	
		135	⑧	1.10	140	660	59
		135	⑨	1.05	140	850	64
	IV	110	⑩	0.92	95	420	
		110	⑪	0.92	95	500	50
		110	⑫	0.90	95	610	56

*rated data

Fan ordering information

Airflow direction A	Airflow direction V
Design	D (guard grille suction side)	K (guard grille pressure side)
		
Type **Article no.**	**FN040-4ED.0F.A7P2** **156231**	**FN040-4EK.0F.V7P2** **156236**
Weight kg	5.10	5.70

Control technology

Frequency inverters Fcontrol 1~	Motor protection units 1~	Electronic voltage controllers 1~
		
Page 474	Page 518	Page 492

FE2owlet

for single phase alternating current, 6 pole

FN040-6E



Description

Motor technology: AC
Rated voltage U_N: **1~ 230 V±10 %***
Rated frequency f_N: **50 Hz*** (60Hz data available)
Input power P_1: **130 W***
Rated current I_N: **0.60 A***
Rated speed n_N: **950 min^{-1}***
Starting current I_A: 1.20 A
Current increase ΔI: 0 %
Service capacitor C_{400V}: 5.0 µF
Thermal class: **THCL155***
Min. permitted ambient temperature $t_{R(min)}$: -25 °C
Max. permitted ambient temperature $t_{R(max)}$: 70 °C
Electrical connection: Terminal box
Number of blades: 7
Protection class: IP54
Motor protection: thermal contact
Blades: High Performance Composite Material, uncoated,
Rotor: Aluminium, 1 coat paint, jet black
Conformity: CE
ErP-data
Not subject to the regulations of ErP directive (P_1< 125 W)
* Rated data

Characteristic curve

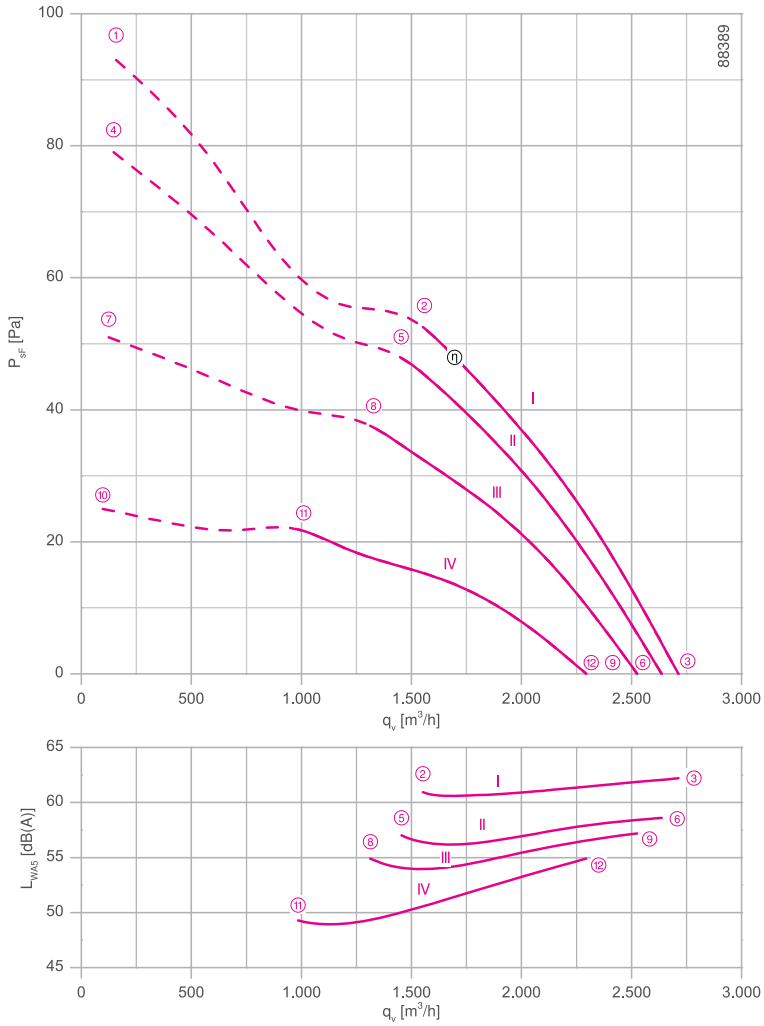

Measured in full bell mouth without guard grille in installation type A according to ISO 5801

Connection diagram Page 531
for airflow direction A 1360-104XB
for airflow direction V 1360-104XA

System components Page 430

Dimensions mm

Airflow direction A

Design W - axial bolted, mounting for short bell mouth, guard grille suction side

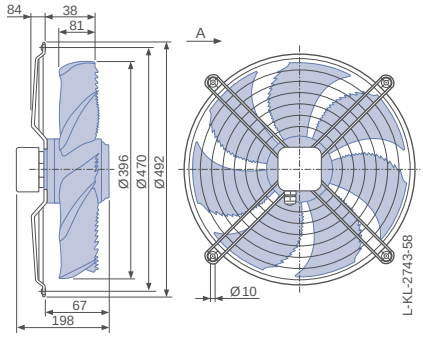

Design D - axial bolted, suspension for full bell mouth, guard grille suction side

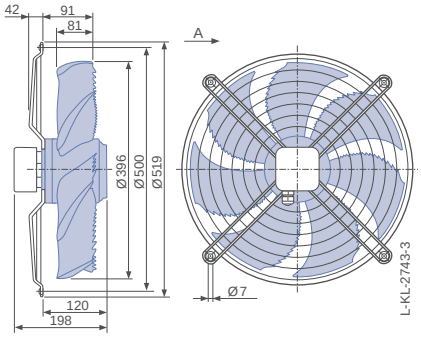

Design L - round full bell mouth, guard grille suction side

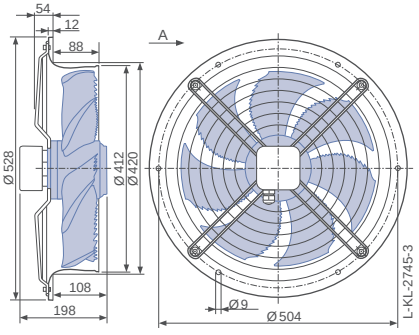

Performance data

Type	Characteristic curve	Voltage U V	Operating point	Current I A	Input power P_1 W	Speed n min^{-1}	Suction side sound power level L_{WA5} dB(A)
FN040-6E_.0F._7P1	I	230	①	0.64	140	930	
		230*	②	**0.60***	**130***	**950***	61
		230	③	0.56	120	970	62
	II	170	④	0.56	95	860	
		170	⑤	0.50	85	900	57
		170	⑥	0.42	70	940	59
	III	135	⑦	0.58	75	690	
		135	⑧	0.50	70	800	55
		135	⑨	0.40	55	900	57
	IV	110	⑩	0.52	55	490	
		110	⑪	0.50	55	610	49
		110	⑫	0.42	46	820	55

*rated data

Fan ordering information

Airflow direction A | **Airflow direction V**

Design	W (guard grille suction side)	D (guard grille suction side)	L (guard grille suction side)	K (guard grille pressure side)	H (guard grille pressure side)	Q (guard grille pressure side)
						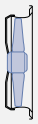
Type	**FN040-6EW.0F.A7P1**	**FN040-6ED.0F.A7P1**	**FN040-6EL.0F.A7P1**	**FN040-6EK.0F.V7P1**	**FN040-6EH.0F.V7P1**	**FN040-6EQ.0F.V7P1**
Article no.	**155290**	**152910**	**152911**	**152915**	**152914**	**152916**
Weight kg	5.70	5.10	7.80	5.50	7.80	8.70

Control technology

Frequency inverters Fcontrol 1~	Motor protection units 1~	Electronic voltage controllers 1~
		
Page 474	Page 518	Page 492

Airflow direction V

Design K - axial bolted, mounted for short bell mouth, guard grille pressure side

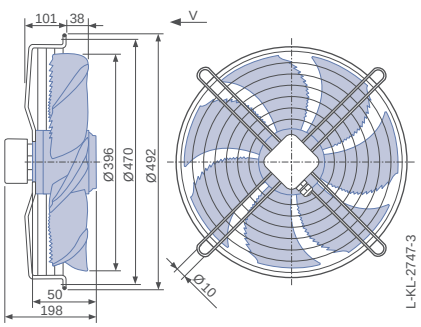

Design H - pipe sockets with a flange, guard grille pressure side

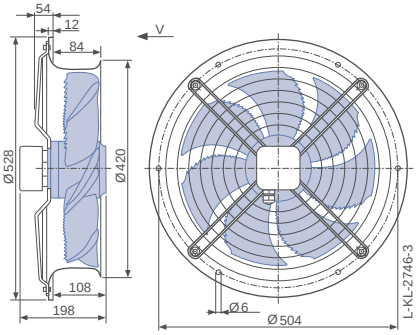

Design Q - square full bell mouth, guard grille pressure side

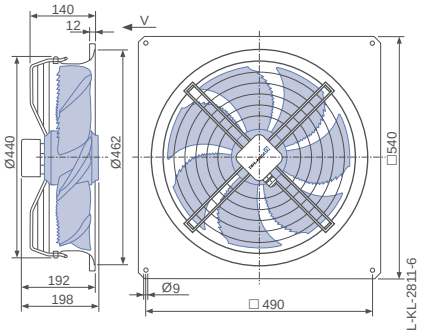

FE2owlet

for three phase alternating current, 4-4 pole

FN040-VD



Description

Motor technology: AC
Rated voltage U_N: **3~ 400 V (Δ/Y) ±10 %***
Rated frequency f_N: **50 Hz*** (60Hz data available)
Input power P_1: **230/170 W***
Rated current I_N: **0.46/0.27 A***
Rated speed n_N: **1360/1080 min^{-1}***
Starting current I_A: 1.60 / 0.55 A
Current increase ΔI: 0 %
Thermal class: **THCL155***
Min. permitted ambient temperature $t_{R(min)}$: -40 °C
Max. permitted ambient temperature $t_{R(max)}$: 70 °C
Electrical connection: Terminal box
Number of blades: 7
Protection class: IP54
Motor protection: thermal contact
Blades: High Performance Composite Material, uncoated,
Rotor: Aluminium, 1 coat paint, jet black
Conformity: ErP 2015, CE
ErP-data
Efficiency η_{statA}: 32.4 %
Efficiency: N_{actual} = 42.7 / N_{target} = 40**
* Rated data
**ErP 2015

Characteristic curve

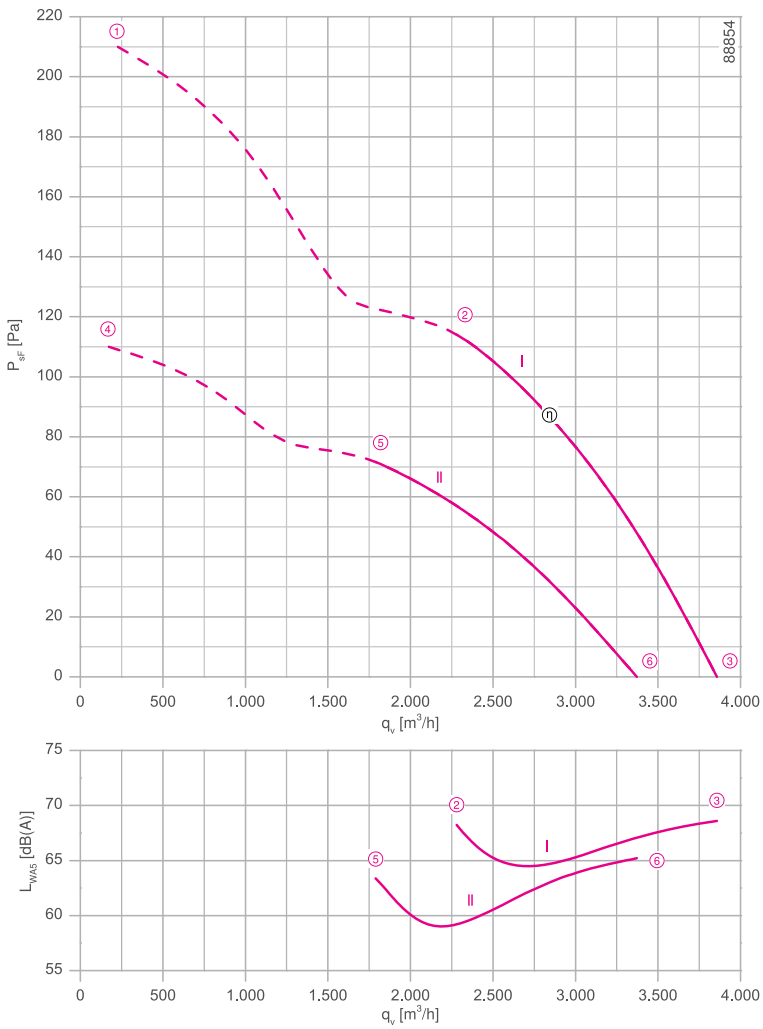

Measured in full bell mouth without guard grille in installation type A according to ISO 5801

Connection diagram Page 531
for airflow direction A 1360-108XB
for airflow direction V 1360-108XA

System components Page 430

Dimensions mm

Airflow direction A

Design W - axial bolted, mounting for short bell mouth, guard grille suction side

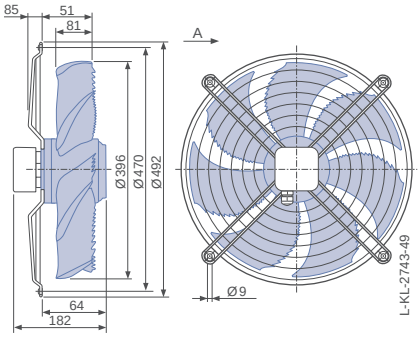

Design D - axial bolted, suspension for full bell mouth, guard grille suction side

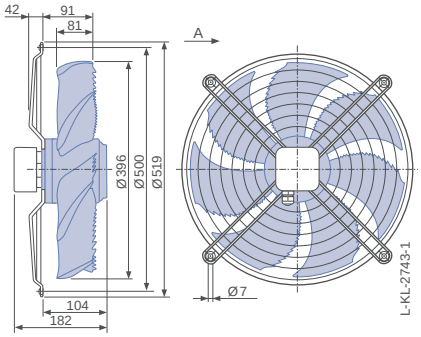

Design L - round full bell mouth, guard grille suction side

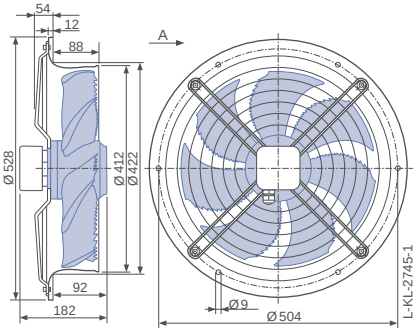

Performance data

Type	Connection	Characteristic curve	Voltage U V	Operating point	Current I A	Input power P_1 W	Speed n min^{-1}	Suction side sound power level L_{WA5} dB(A)
FN040-VD_.0F._7P1	Δ	I	400	①	0.54	300	1310	
			400*	②	**0.46***	**230***	**1360***	69
			400	③	0.40	170	1410	69
	Y	II	400	④	0.31	200	950	
			400*	⑤	**0.27***	**170***	**1080***	64
			400	⑥	0.21	130	1230	65

*rated data

Fan ordering information

Airflow direction A | **Airflow direction V**

Design	W (guard grille suction side)	D (guard grille suction side)	L (guard grille suction side)	K (guard grille pressure side)	I (guard grille pressure side)	H (guard grille pressure side)
						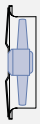
Type **Article no.**	**FN040-VDW.0F.A7P1** **156642**	**FN040-VDD.0F.A7P1** **152902**	**FN040-VDL.0F.A7P1** **152903**	**FN040-VDK.0F.V7P1** **152907**	**FN040-VDI.0F.V7P1** **152905**	**FN040-VDH.0F.V7P1** **152906**
Weight kg	5.60	5.10	7.80	5.50	5.10	7.80

Control technology

Frequency inverters Fcontrol 3~	Motor protection units 3~	Electronic voltage controllers 3~
		
Page 480	Page 518	Page 506

Airflow direction V

Design K - axial bolted, mounted for short bell mouth, guard grille pressure side

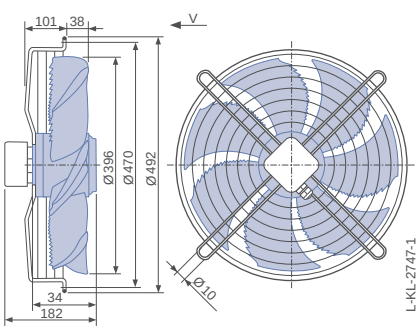

Design I - axial bolted, mounting for bell mouth flange, guard grille pressure side

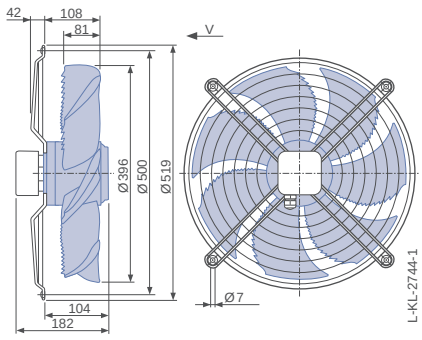

Design H - pipe sockets with a flange, guard grille pressure side

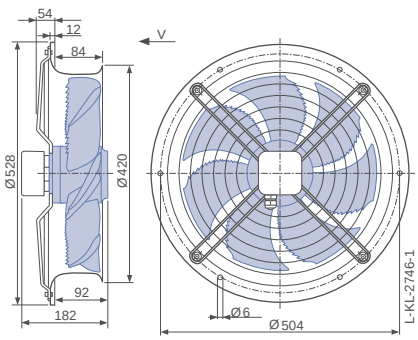

FE2owlet

for three phase alternating current, 4-4 pole

FN040-VD



Description

Motor technology: AC
Rated voltage U_N: **3~ 400 V (Δ/Y) ±10 %***
Rated frequency f_N: **50 Hz*** (60Hz data available)
Input power P_1: **260/180 W***
Rated current I_N: **0.50/0.29 A***
Rated speed n_N: **1340/1020 min^{-1}***
Starting current I_A: 1.60 / 0.55 A
Current increase ΔI: 0 %
Thermal class: **THCL155***
Min. permitted ambient temperature $t_{R(min)}$: -40 °C
Max. permitted ambient temperature $t_{R(max)}$: 70 °C
Electrical connection: Terminal box
Number of blades: 7
Protection class: IP54
Motor protection: thermal contact
Blades: High Performance Composite Material, uncoated,
Rotor: Aluminium, 1 coat paint, jet black
Conformity: ErP 2015, CE
ErP-data
Efficiency η_{statA}: 31.9 %
Efficiency: N_{actual} = 42.0 / N_{target} = 40**
* Rated data
**ErP 2015

Characteristic curve

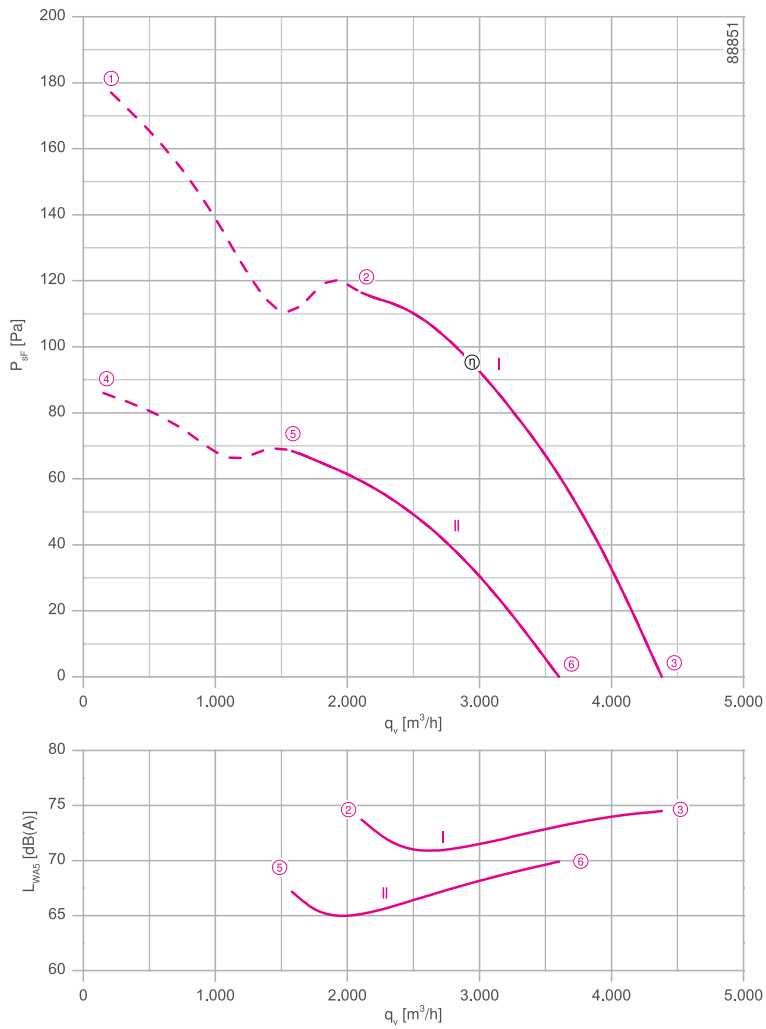

Measured in full bell mouth without guard grille in installation type A according to ISO 5801

Connection diagram Page 531
for airflow direction A 1360-108XB
for airflow direction V 1360-108XA

System components Page 430

Dimensions mm

Airflow direction A

Design D - axial bolted, suspension for full bell mouth, guard grille suction side

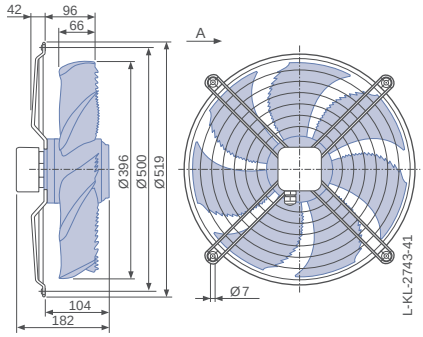

Airflow direction V

Design K - axial bolted, mounted for short bell mouth, guard grille pressure side

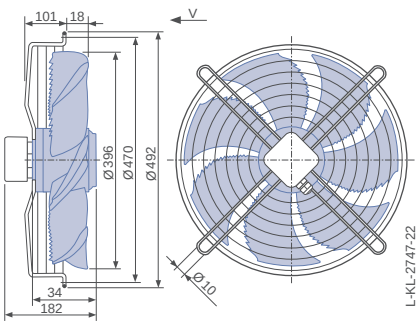

Performance data

Type	Connection	Characteristic curve	Voltage U V	Operating point	Current I A	Input power P_1 W	Speed n min^{-1}	Suction side sound power level L_{WA5} dB(A)
FN040-VD_.0F._7P2	Δ	I	400	①	0.56	330	1290	
			400*	②	**0.50***	**260***	**1340***	74
			400	③	0.44	200	1390	75
	Y	II	400	④	0.32	200	900	
			400*	⑤	**0.29***	**180***	**1020***	67
			400	⑥	0.24	150	1150	70

*rated data

Fan ordering information

Airflow direction A	Airflow direction V
Design	D (guard grille suction side)	K (guard grille pressure side)
		
Type **Article no.**	**FN040-VDD.0F.A7P2** **156239**	**FN040-VDK.0F.V7P2** **156244**
Weight kg	5.10	5.70

Control technology

Frequency inverters Fcontrol 3~	Motor protection units 3~	Electronic voltage controllers 3~
		
Page 480	Page 518	Page 506

FE2owlet

for single phase alternating current, 4 pole

FN042-4E



Description

Motor technology: AC
Rated voltage U_N: **1~ 230 V±10 %***
Rated frequency f_N: **50 Hz***
Input power P_1: **0.50 kW***
Rated current I_N: **2.30 A***
Rated speed n_N: **1400 min^{-1}***
Current increase ΔI: 40 %
Service capacitor C_{400V}: 10,0 µF
Thermal class: **THCL155***
Min. permitted ambient temperature $t_{R(min)}$: -25 °C
Max. permitted ambient temperature $t_{R(max)}$: 65 °C
Electrical connection: Terminal box
Number of blades: 7
Protection class: IP54
Motor protection: thermal contact
Blades: Aluminium, 1 coat paint, jet black
Rotor: Aluminium, 1 coat paint, jet black
Conformity: ErP 2015, CE
ErP-data
Efficiency η_{statA}: 31.8 %
Efficiency: N_{actual} = 40.2 / N_{target} = 40**
* Rated data
**ErP 2015

Characteristic curve

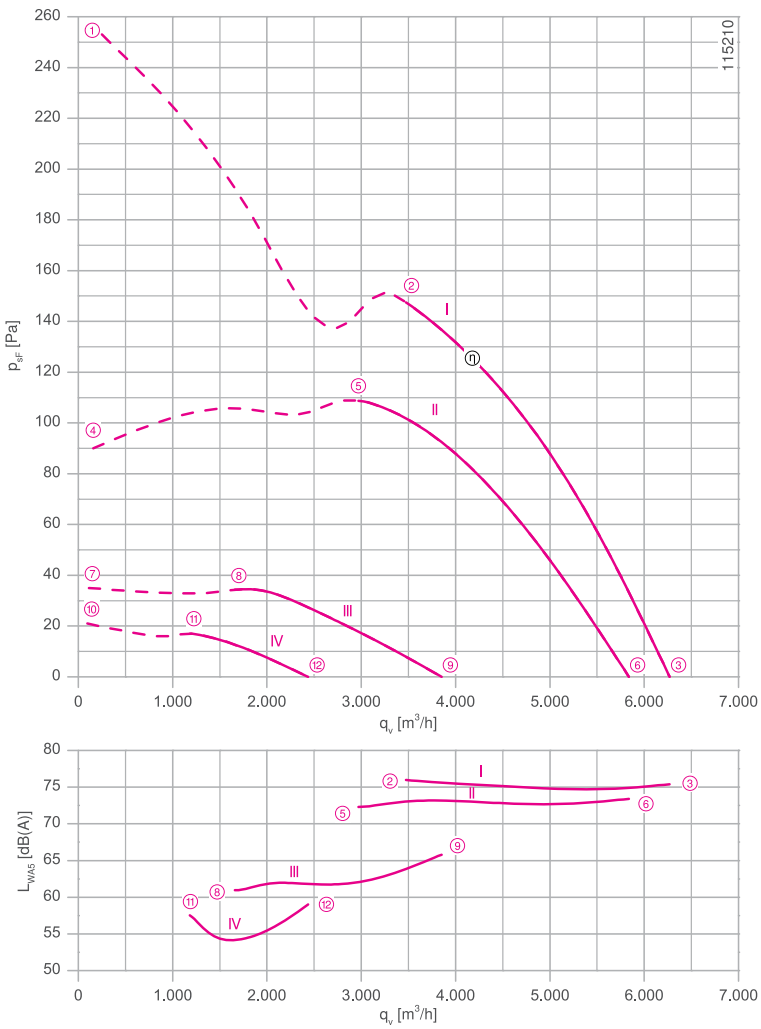

Measured in full bell mouth without guard grille in installation type A according to ISO 5801

Connection diagram Page 531
1360-104XB

System components Page 430

Dimensions mm

Airflow direction A

Design W - axial bolted, mounting for short bell mouth, guard grille suction side

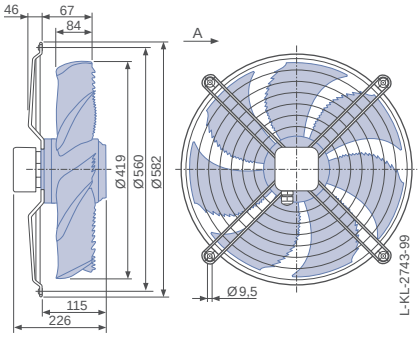

Design D - axial bolted, suspension for full bell mouth, guard grille suction side

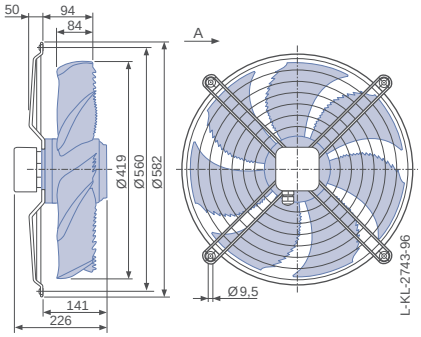

Design Q - square full bell mouth, guard grille suction side

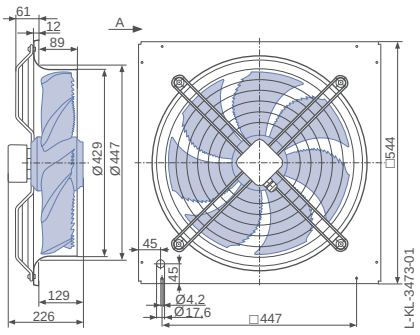

Performance data

Type	Characteristic curve	Voltage U V	Operating point	Current I A	Input power P_1 W	Speed n min^{-1}	Suction side sound power level L_{WA5} dB(A)
FN042-4E_.4I._7P2	I	230	①	3.10	640	1340	
		230*	②	**2.30***	**500***	**1400***	76
		230	③	1.95	420	1420	75
	II	170	④	4.20	580	790	
		170	⑤	3.00	460	1200	73
		170	⑥	2.30	370	1320	73
	III	135	⑦	3.40	370	500	
		135	⑧	3.30	370	680	61
		135	⑨	3.10	350	890	66
	IV	110	⑩	2.80	250	380	
		110	⑪	2.80	240	480	58
		110	⑫	2.70	240	560	59

*rated data

Fan ordering information

Airflow direction A

Design	W (guard grille suction side)	D (guard grille suction side)	Q (guard grille suction side)
			
Type	**FN042-4EW.4I.A7P2 171258**	**FN042-4ED.4I.A7P2 171257**	**FN042-4EQ.4I.A7P2 171259**
Weight kg	11.90	12.10	15.60

Control technology

Frequency inverters Fcontrol 1~	Motor protection units 1~	Electronic voltage controllers 1~
		
Page 474	Page 518	Page 492

FE2owlet

for single phase alternating current, 6 pole

FN042-6E



Description

Motor technology: AC
Rated voltage U_N: **1~ 230 V±10 %***
Rated frequency f_N: **50 Hz*** (60Hz data available)
Input power P_1: **120 W***
Rated current I_N: **0.56 A***
Rated speed n_N: **930 min^{-1}***
Starting current I_A: 1.20 A
Current increase ΔI: 0 %
Service capacitor C_{400V}: 4.0 µF
Thermal class: **THCL155***
Min. permitted ambient temperature $t_{R(min)}$: -25 °C
Max. permitted ambient temperature $t_{R(max)}$: 70 °C
Electrical connection: Terminal box
Number of blades: 7
Protection class: IP54
Motor protection: thermal contact
Blades: High Performance Composite Material, uncoated,
Rotor: Aluminium, 1 coat paint, jet black
Conformity: CE
ErP-data
Not subject to the regulations of ErP directive (P_1< 125 W)
* Rated data

Characteristic curve

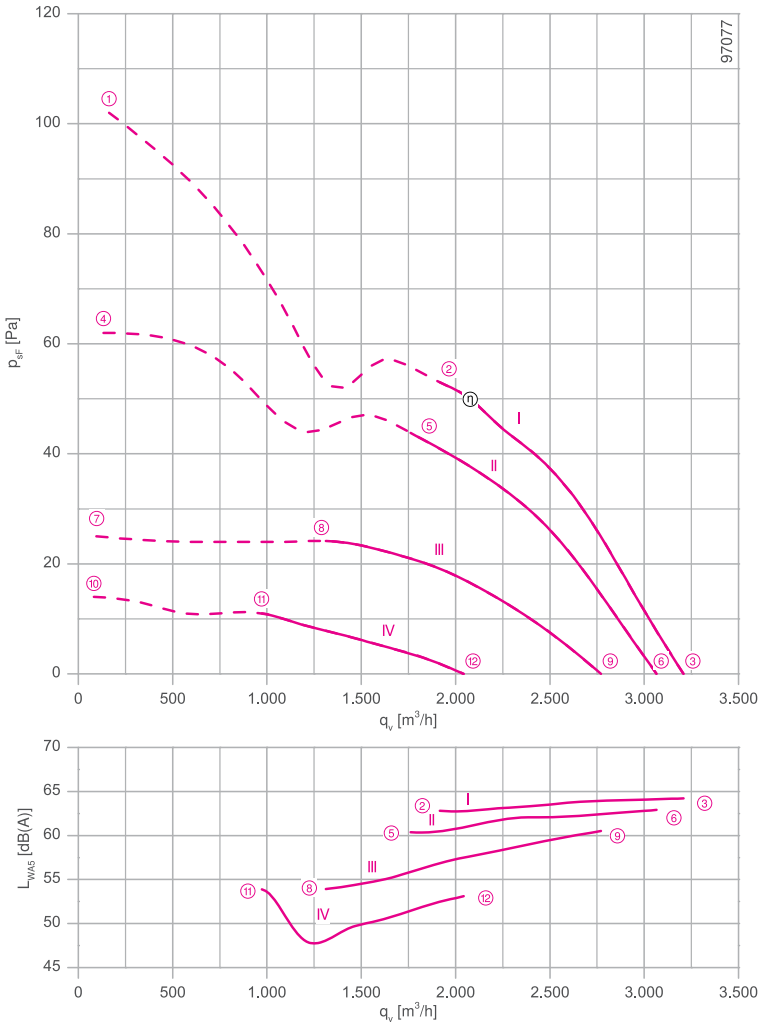

Measured in full bell mouth without guard grille in installation type A according to ISO 5801

Connection diagram	Page
for airflow direction A	1360-104XB
for airflow direction V	1360-104XA

System components Page 430

Dimensions mm

Airflow direction A

Design W - axial bolted, mounting for short bell mouth, guard grille suction side

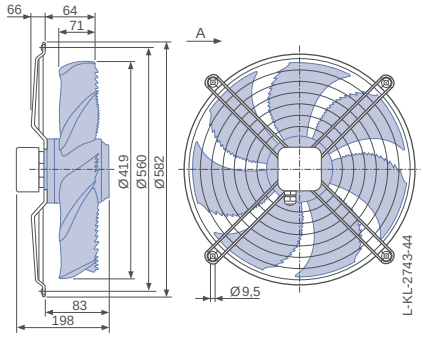

Design D - axial bolted, suspension for full bell mouth, guard grille suction side

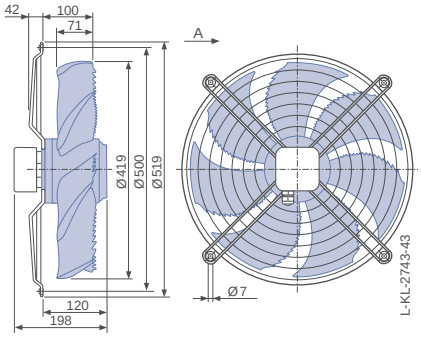

Design L - round full bell mouth, guard grille suction side

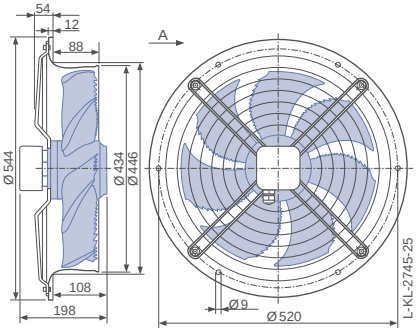

Performance data

Type	Characteristic curve	Voltage U V	Operating point	Current I A	Input power P_1 W	Speed n min^{-1}	Suction side sound power level L_{WA5} dB(A)
FN042-6E_.0F._7P1	I	230	①	0.66	150	890	
		230*	②	**0.56***	**120***	**930***	63
		230	③	0.50	110	950	64
	II	170	④	0.70	120	700	
		170	⑤	0.54	90	850	60
		170	⑥	0.42	70	920	63
	III	135	⑦	0.62	80	440	
		135	⑧	0.58	75	620	54
		135	⑨	0.46	60	830	61
	IV	110	⑩	0.52	55	330	
		110	⑪	0.52	55	420	52
		110	⑫	0.48	50	620	53

*rated data

Fan ordering information

Airflow direction A | **Airflow direction V**

Design	W (guard grille suction side)	D (guard grille suction side)	L (guard grille suction side)	I (guard grille pressure side)	H (guard grille pressure side)
					
Type	**FN042-6EW.0F.A7P1**	**FN042-6ED.0F.A7P1**	**FN042-6EL.0F.A7P1**	**FN042-6EI.0F.V7P1**	**FN042-6EH.0F.V7P1**
Article no.	**155780**	**155778**	**155779**	**155782**	**155783**
Weight kg	5.70	5.30	8.00	5.30	7.70

Control technology

Frequency inverters Fcontrol 1~	Motor protection units 1~	Electronic voltage controllers 1~
		
Page 474	Page 518	Page 492

Airflow direction V

Design I - axial bolted, mounting for bell mouth flange, guard grille pressure side

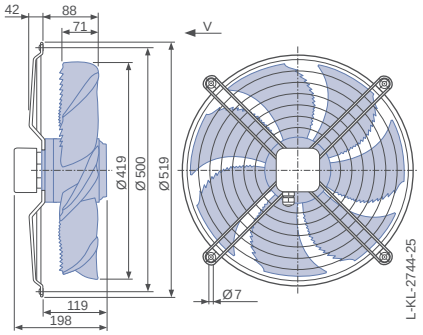

Design H - pipe sockets with a flange, guard grille pressure side

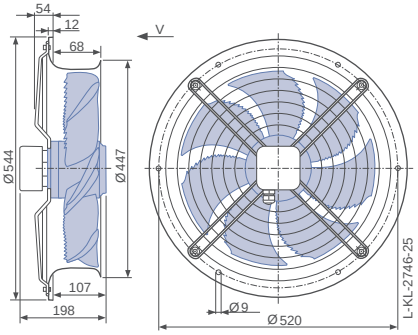

FE2owlet

for three phase alternating current, 4-4 pole

FN042-VD



Description

Motor technology: AC
Rated voltage U_N: **3~ 400 V (Δ/Y) ±10 %***
Rated frequency f_N: **50 Hz*** (60Hz data available)
Input power P_1: **280/190 W***
Rated current I_N: **0.58/0.31 A***
Rated speed n_N: **1340/1080 min^{-1}***
Starting current I_A: 1.90 / 0.65 A
Current increase ΔI: 0 %
Thermal class: **THCL155***
Min. permitted ambient temperature $t_{R(min)}$: -40 °C
Max. permitted ambient temperature $t_{R(max)}$: 70 °C
Electrical connection: Terminal box
Number of blades: 7
Protection class: IP44
Motor protection: thermal contact
Blades: High Performance Composite Material, uncoated,
Rotor: Aluminium, 1 coat paint, jet black
Conformity: ErP 2015, CE
ErP-data
Efficiency η_{statA}: 31.3 %
Efficiency: N_{actual} = 41.2 / N_{target} = 40**
* Rated data
**ErP 2015

Characteristic curve

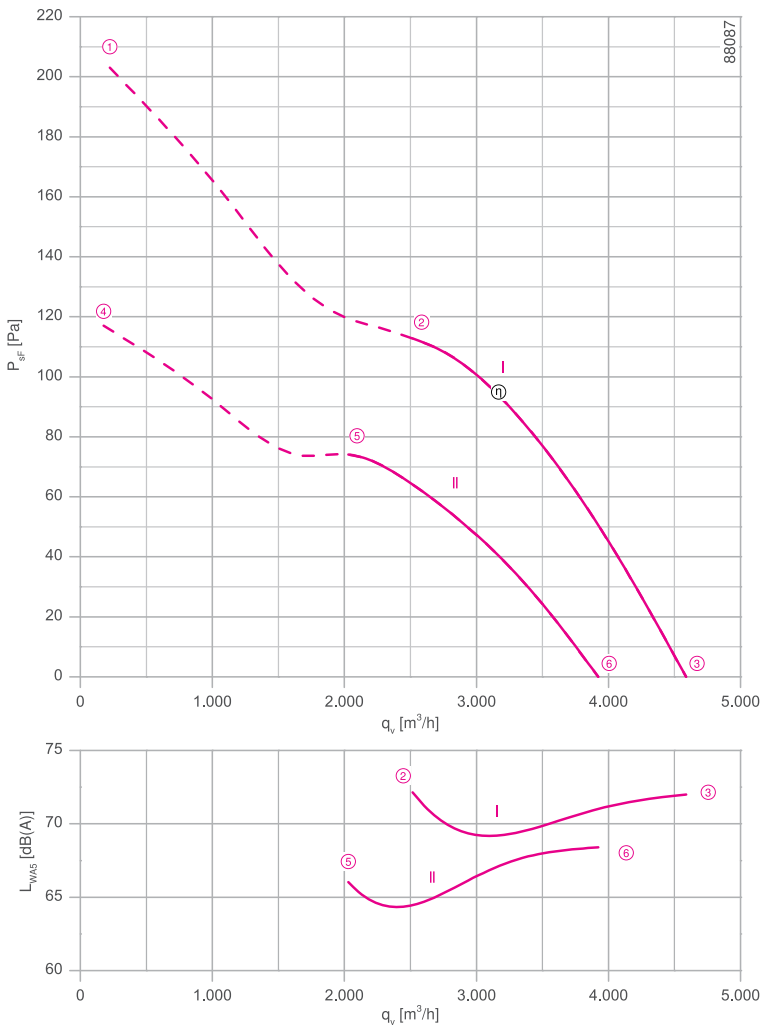

Measured in full bell mouth without guard grille in installation type A according to ISO 5801

Connection diagram Page 531
for airflow direction A 1360-108XB
for airflow direction V 1360-108XA

System components Page 430

Dimensions mm

Airflow direction A

Design W - axial bolted, mounting for short bell mouth, guard grille suction side

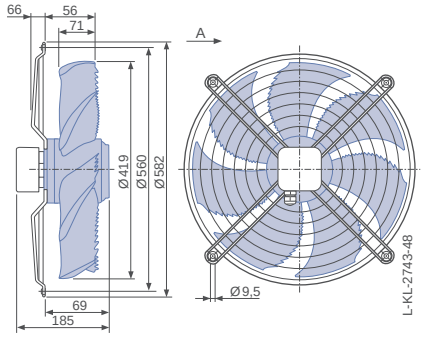

Design D - axial bolted, suspension for full bell mouth, guard grille suction side

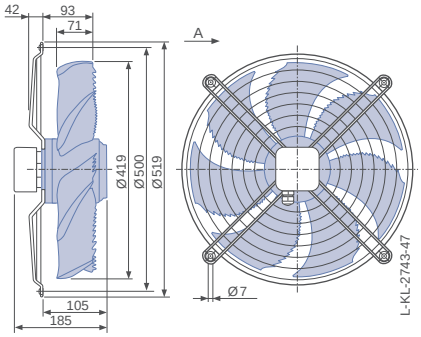

Design L - round full bell mouth, guard grille suction side

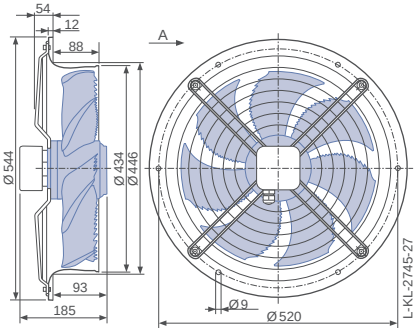

Performance data

Type	Connection	Characteristic curve	Voltage U V	Operating point	Current I A	Input power P_1 W	Speed n min^{-1}	Suction side sound power level L_{WA5} dB(A)
FN042-VD_.2F._7P1	Δ	I	400	①	0.64	350	1290	
			400*	②	**0.58***	**280***	**1340***	72
			400	③	0.52	220	1380	72
	Y	II	400	④	0.36	220	980	
			400*	⑤	**0.31***	**190***	**1080***	66
			400	⑥	0.26	160	1190	68

*rated data

Fan ordering information

Airflow direction A | **Airflow direction V**

Design	W (guard grille suction side)	D (guard grille suction side)	L (guard grille suction side)	I (guard grille pressure side)	H (guard grille pressure side)
					
Type **Article no.**	**FN042-VDW.2F.A7P1** **155773**	**FN042-VDD.2F.A7P1** **155771**	**FN042-VDL.2F.A7P1** **155772**	**FN042-VDI.2F.V7P1** **155775**	**FN042-VDH.2F.V7P1** **155776**
Weight kg	6.20	5.90	8.50	5.90	8.20

Control technology

Frequency inverters Fcontrol 3~	Motor protection units 3~	Electronic voltage controllers 3~
		
Page 480	Page 518	Page 506

Airflow direction V

Design I - axial bolted, mounting for bell mouth flange, guard grille pressure side

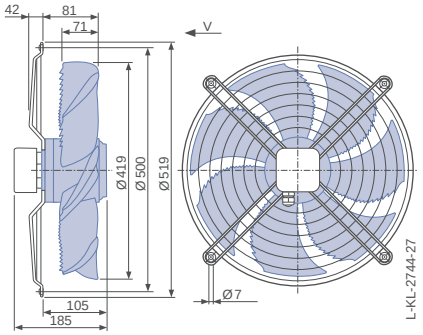

Design H - pipe sockets with a flange, guard grille pressure side

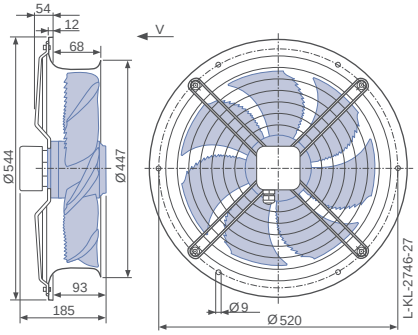

FE2owlet

for three phase alternating current, 6-6 pole

FN042-SD



Description

Motor technology: AC
Rated voltage U_N: **3~ 400 V (Δ/Y) ±10 %***
Rated frequency f_N: **50 Hz*** (60Hz data available)
Input power P_1: **130/80 W***
Rated current I_N: **0.35/0.15 A***
Rated speed n_N: **920/ 780 min^{-1}***
Starting current I_A: 0.85 / 0.26 A
Current increase ΔI: 0 %
Thermal class: **THCL155***
Min. permitted ambient temperature $t_{R(min)}$: -40 °C
Max. permitted ambient temperature $t_{R(max)}$: 70 °C
Electrical connection: Terminal box
Number of blades: 7
Protection class: IP54
Motor protection: thermal contact
Blades: High Performance Composite Material, uncoated,
Rotor: Aluminium, 1 coat paint, jet black
Conformity: CE
ErP-data
Not subject to the regulations of ErP directive (P_1< 125 W)
* Rated data

Characteristic curve

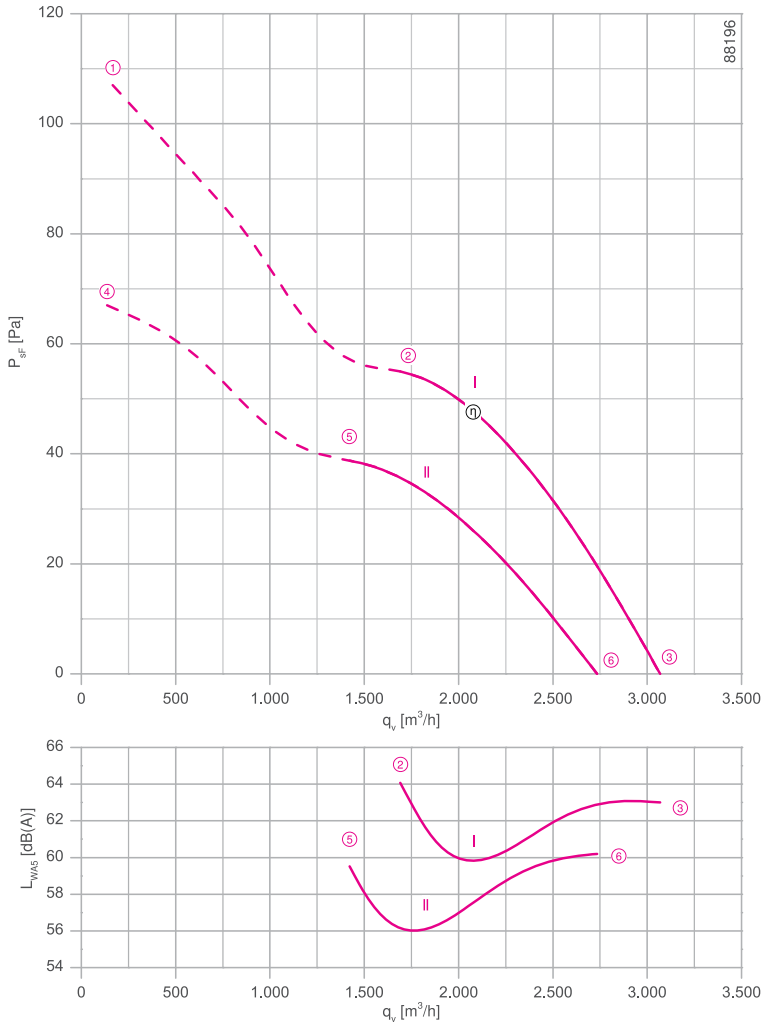

Measured in full bell mouth without guard grille in installation type A according to ISO 5801

Connection diagram Page 531
for airflow direction A 1360-108XB
for airflow direction V 1360-108XA

System components Page 430

Dimensions mm

Airflow direction A

Design W - axial bolted, mounting for short bell mouth, guard grille suction side

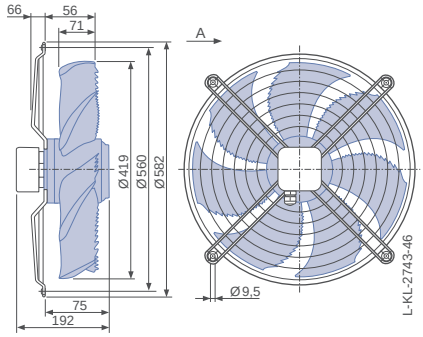

Design D - axial bolted, suspension for full bell mouth, guard grille suction side

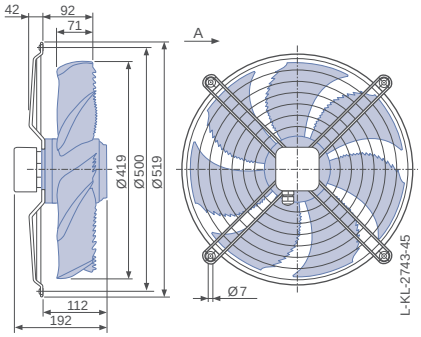

Design L - round full bell mouth, guard grille suction side

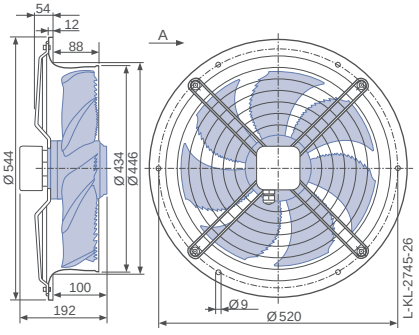

Performance data

Type	Connection	Characteristic curve	Voltage U V	Operating point	Current I A	Input power P_1 W	Speed n min^{-1}	Suction side sound power level L_{WA5} dB(A)
FN042-SD_.2C._7P1	Δ	I	400	①	0.37	150	890	
			400*	②	**0.35***	**130***	**920***	64
			400	③	0.35	100	940	63
	Y	II	400	④	0.17	90	700	
			400*	⑤	**0.15***	**80***	**780***	60
			400	⑥	0.13	60	850	60

*rated data

Fan ordering information

Airflow direction A | **Airflow direction V**

Design	W (guard grille suction side)	D (guard grille suction side)	L (guard grille suction side)	I (guard grille pressure side)	H (guard grille pressure side)
					
Type	**FN042-SDW.2C.A7P1**	**FN042-SDD.2C.A7P1**	**FN042-SDL.2C.A7P1**	**FN042-SDI.2C.V7P1**	**FN042-SDH.2C.V7P1**
Article no.	**155787**	**155785**	**155786**	**155789**	**155790**
Weight kg	5.50	5.10	7.80	5.10	7.00

Control technology

Frequency inverters Fcontrol 3~	Motor protection units 3~	Electronic voltage controllers 3~
		
Page 480	Page 518	Page 506

Airflow direction V

Design I - axial bolted, mounting for bell mouth flange, guard grille pressure side

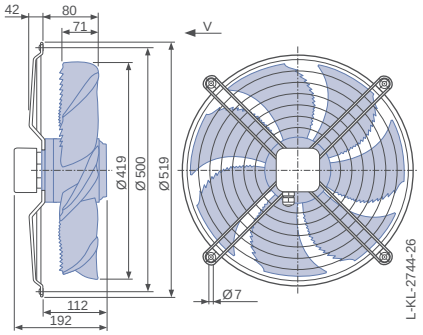

Design H - pipe sockets with a flange, guard grille pressure side

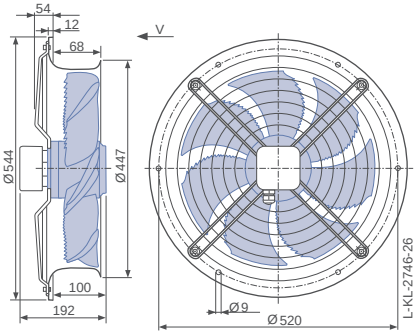

FE2owlet

for single phase alternating current, 4 pole

FN045-4E



Description

Motor technology: AC
Rated voltage U_N: **1~ 230 V±10 %***
Rated frequency f_N: **50 Hz***
Input power P_1: **0.60 kW***
Rated current I_N: **2.90 A***
Rated speed n_N: **1390 min^{-1}***
Starting current I_A: 6.50 A
Current increase ΔI: 25 %
Service capacitor C_{400V}: 14.0 µF
Thermal class: **THCL155***
Min. permitted ambient temperature $t_{R(min)}$: -25 °C
Max. permitted ambient temperature $t_{R(max)}$: 70 °C
Electrical connection: Terminal box
Number of blades: 7
Protection class: IP54
Motor protection: thermal contact
Blades: Aluminium, uncoated
Rotor: Aluminium, uncoated
Conformity: ErP 2015, CE
ErP-data
Efficiency η_{statA}: 34.0 %
Efficiency: N_{actual} = 41.8 / N_{target} = 40**
* Rated data
**ErP 2015

Connection diagram Page 531
for airflow direction A 1360-104XB
for airflow direction V 1360-104XA

System components Page 430

Characteristic curve

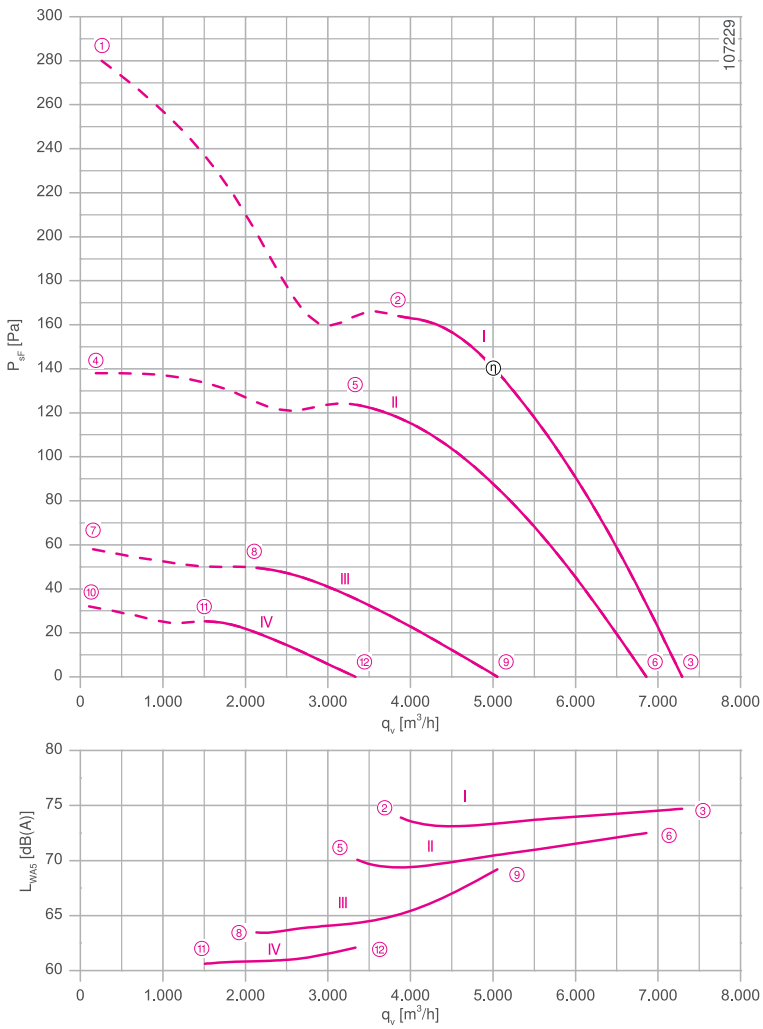

Measured in full bell mouth without guard grille in installation type A according to ISO 5801

Dimensions mm

Airflow direction A

Design W - axial bolted, mounting for short bell mouth, guard grille suction side

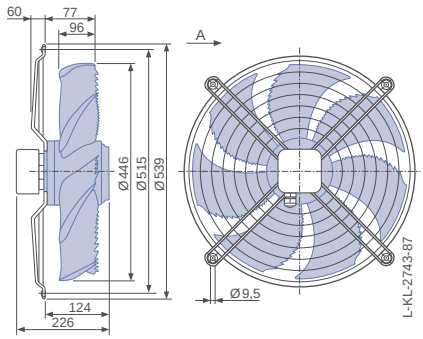

Design Q - square full bell mouth, guard grille suction side

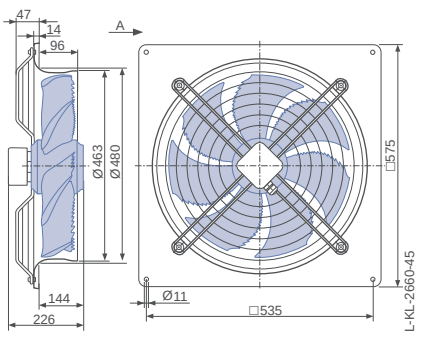

Airflow direction V

Design K - axial bolted, mounted for short bell mouth, guard grille pressure side

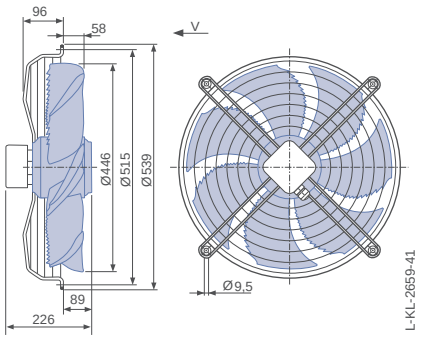

Performance data

Type	Characteristic curve	Voltage U V	Operating point	Current I A	Input power P_1 W	Speed n min^{-1}	Suction side sound power level L_{WA5} dB(A)
FN045-4E_.4I._7P1	I	230	①	3.50	740	1350	
		230*	②	**2.90***	**600***	**1390***	74
		230	③	2.40	500	1420	75
	II	170	④	4.40	620	940	
		170	⑤	3.50	540	1200	70
		170	⑥	2.70	420	1330	73
	III	135	⑦	3.70	390	610	
		135	⑧	3.50	390	760	64
		135	⑨	3.30	370	980	69
	IV	110	⑩	3.00	250	450	
		110	⑪	2.90	250	530	61
		110	⑫	2.90	250	650	62

*rated data

Fan ordering information

Airflow direction A			Airflow direction V		
Design	W (guard grille suction side)	Q (guard grille suction side)	K (guard grille pressure side)	F (without guard grille)	Q (guard grille pressure side)
		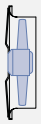		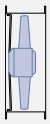	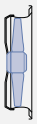
Type	**FN045-4EW.4I.A7P1**	**FN045-4EQ.4I.A7P1**	**FN045-4EK.4I.V7P1**	**FN045-4EF.4I.V7P1**	**FN045-4EQ.4I.V7P1**
Article no.	**167870**	**167871**	**167804**	**167872**	**167874**
Weight kg	12.60	16.20	12.60	15.70	16.30

Control technology

Frequency inverters Fcontrol 1~	Motor protection units 1~	Electronic voltage controllers 1~
		
Page 474	Page 518	Page 492

Design F - flange ring with two flanges, without guard grille

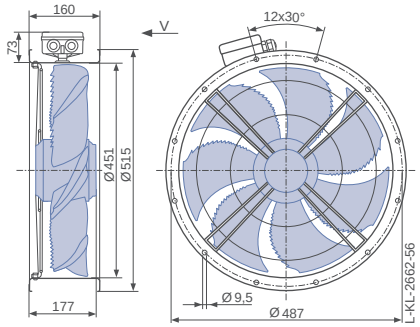

Design Q - square full bell mouth, guard grille pressure side

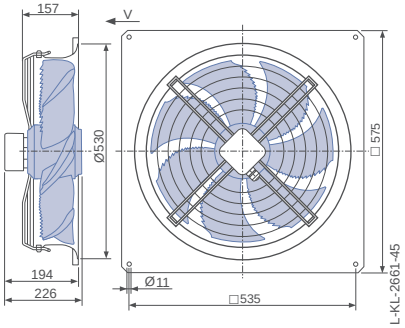

FE2owlet

for single phase alternating current, 6 pole

FN045-6E



Description

Motor technology: AC
Rated voltage U_N: **1~ 230 V±10 %***
Rated frequency f_N: **50 Hz*** (60Hz data available)
Input power P_1: **120 W***
Rated current I_N: **0.50 A***
Rated speed n_N: **700 min^{-1}***
Starting current I_A: 0.65 A
Current increase ΔI: 0 %
Service capacitor C_{400V}: 3.0 µF
Thermal class: **THCL155***
Min. permitted ambient temperature $t_{R(min)}$: -25 °C
Max. permitted ambient temperature $t_{R(max)}$: 70 °C
Electrical connection: Terminal box
Number of blades: 7
Protection class: IP54
Motor protection: thermal contact
Blades: High Performance Composite Material, uncoated,
Rotor: Aluminium, 1 coat paint, jet black
Conformity: CE
ErP-data
Not subject to the regulations of ErP directive (P_1< 125 W)
* Rated data

Characteristic curve

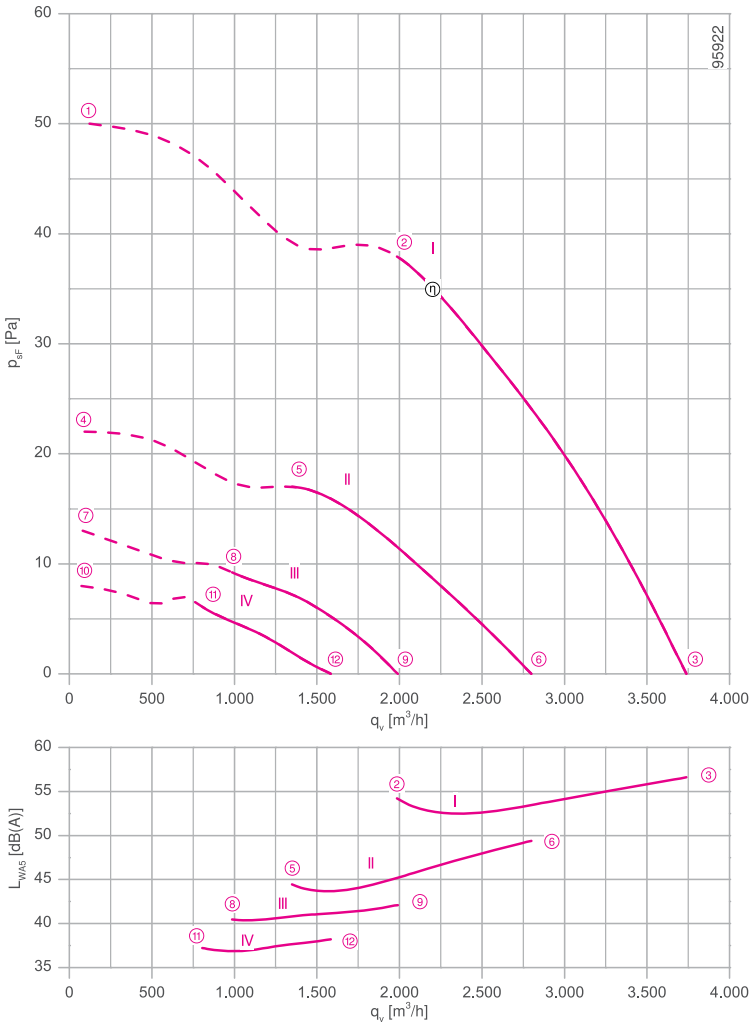

Measured in full bell mouth without guard grille in installation type A according to ISO 5801

Connection diagram Page 531
for airflow direction A 1360-104XB
for airflow direction V 1360-104XA

System components Page 430

Dimensions mm

Airflow direction A

Design W - axial bolted, mounting for short bell mouth, guard grille suction side

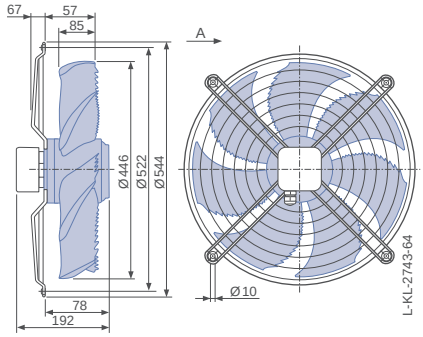

Design D - axial bolted, suspension for full bell mouth, guard grille suction side

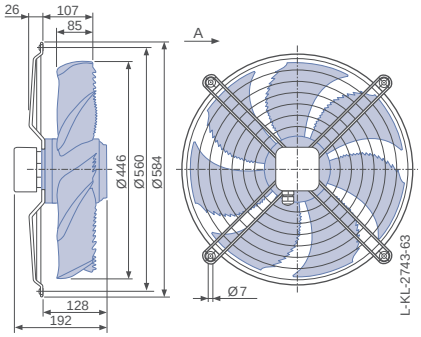

Design L - round full bell mouth, guard grille suction side

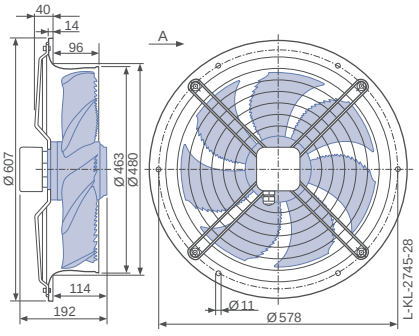

Performance data

Type	Characteristic curve	Voltage U V	Operating point	Current I A	Input power P_1 W	Speed n min^{-1}	Suction side sound power level L_{WA5} dB(A)
FN045-6E_.2F._7P3	I	230	①	0.56	130	570	
		230*	②	**0.50***	**120***	**700***	54
		230	③	0.46	100	790	57
	II	170	④	0.44	75	380	
		170	⑤	0.42	75	480	45
		170	⑥	0.40	70	590	49
	III	135	⑦	0.35	48	280	
		135	⑧	0.35	46	350	40
		135	⑨	0.34	46	430	42
	IV	110	⑩	0.29	32	220	
		110	⑪	0.29	32	270	37
		110	⑫	0.29	32	330	38

*rated data

Fan ordering information

Airflow direction A | **Airflow direction V**

Design	W (guard grille suction side)	D (guard grille suction side)	L (guard grille suction side)	K (guard grille pressure side)	I (guard grille pressure side)	H (guard grille pressure side)
						
Type	**FN045-6EW.2F.A7P3**	**FN045-6ED.2F.A7P3**	**FN045-6EL.2F.A7P3**	**FN045-6EK.2F.V7P3**	**FN045-6EI.2F.V7P3**	**FN045-6EH.2F.V7P3**
Article no.	**160038**	**160036**	**160037**	**160042**	**160040**	**160041**
Weight kg	6.30	6.10	9.50	6.50	6.10	9.50

Control technology

Frequency inverters Fcontrol 1~	Motor protection units 1~	Electronic voltage controllers 1~
		
Page 474	Page 518	Page 492

Airflow direction V

Design K - axial bolted, mounted for short bell mouth, guard grille pressure side

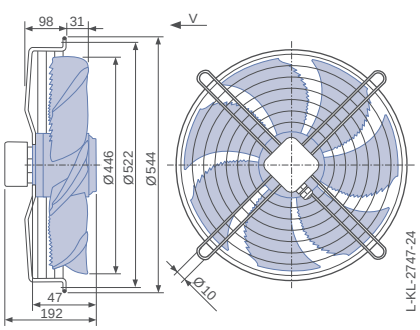

Design I - axial bolted, mounting for bell mouth flange, guard grille pressure side

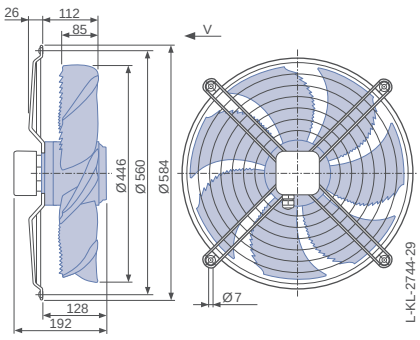

Design H - pipe sockets with a flange, guard grille pressure side

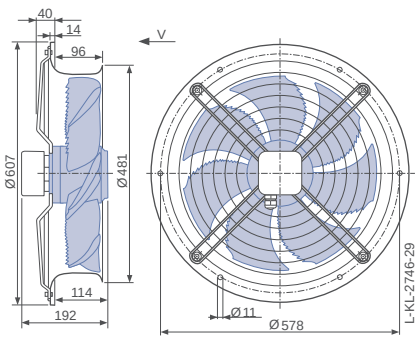

FE2owlet

for three phase alternating current, 4-4 pole

FN045-VD



Description

Motor technology: AC
Rated voltage U_N: **3~ 400 V (Δ/Y) ±10 %***
Rated frequency f_N: **50 Hz*** (60Hz data available)
Input power P_1: **0.34/0.21 kW***
Rated current I_N: **0.64/0.34 A***
Rated speed n_N: **1280/ 970 min^{-1}***
Starting current I_A: 1.90 / 0.65 A
Current increase ΔI: 0 %
Thermal class: **THCL155***
Min. permitted ambient temperature $t_{R(min)}$: -40 °C
Max. permitted ambient temperature $t_{R(max)}$: 70 °C
Electrical connection: Terminal box
Number of blades: 7
Protection class: IP54
Motor protection: thermal contact
Blades: High Performance Composite Material, uncoated,
Rotor: Aluminium, 1 coat paint, jet black
Conformity: ErP 2015, CE
ErP-data
Efficiency η_{statA}: 31.3 %
Efficiency: N_{actual} = 40.6 / N_{target} = 40**
* Rated data
**ErP 2015

Characteristic curve

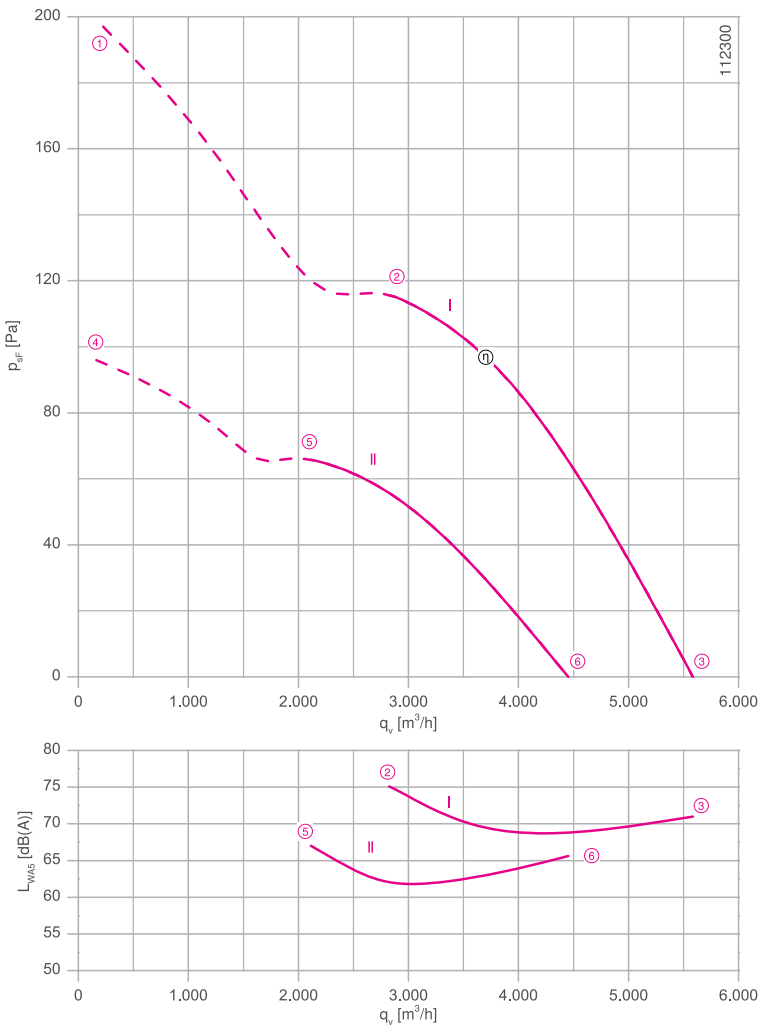

Measured in full bell mouth without guard grille in installation type A according to ISO 5801

Connection diagram Page 531
for airflow direction A 1360-108XB
for airflow direction V 1360-108XA

System components Page 430

Dimensions mm

Airflow direction A

Design W - axial bolted, mounting for short bell mouth, guard grille suction side

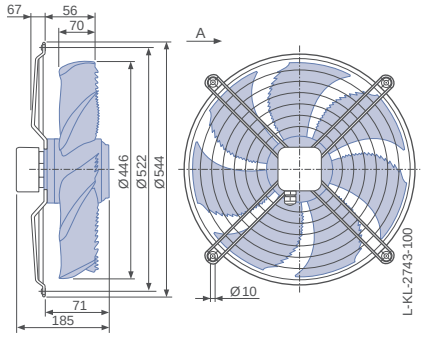

Design D - axial bolted, suspension for full bell mouth, guard grille suction side

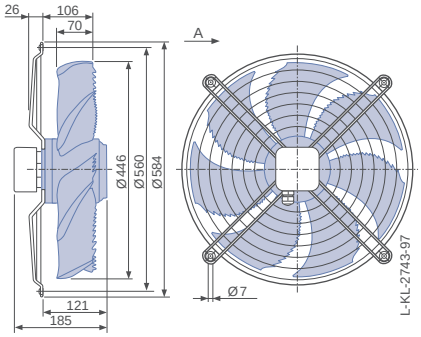

Design L - round full bell mouth, guard grille suction side

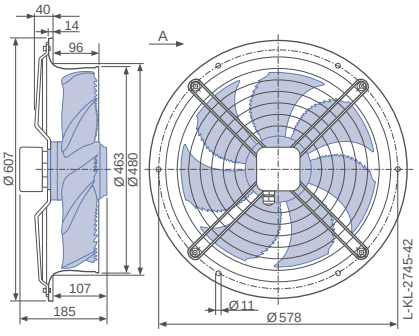

Performance data

Type	Connection	Characteristic curve	Voltage U V	Operating point	Current I A	Input power P_1 W	Speed n min^{-1}	Suction side sound power level L_{WA5} dB(A)
FN045-VD_.2F._7P2	Δ	I	400	①	0.74	440	1210	
			400*	②	**0.62***	**340***	**1280***	75
			400	③	0.56	280	1330	71
	Y	II	400	④	0.39	250	840	
			400*	⑤	**0.34***	**210***	**970***	67
			400	⑥	0.30	190	1070	66

*rated data

Fan ordering information

Airflow direction A | **Airflow direction V**

Design	W (guard grille suction side)	D (guard grille suction side)	L (guard grille suction side)	K (guard grille pressure side)	I (guard grille pressure side)	H (guard grille pressure side)
						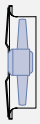
Type **Article no.**	**FN045-VDW.2F.A7P2** **170371**	**FN045-VDD.2F.A7P2** **170370**	**FN045-VDL.2F.A7P2** **170372**	**FN045-VDK.2F.V7P2** **170368**	**FN045-VDI.2F.V7P2** **170369**	**FN045-VDH.2F.V7P2** **170367**
Weight kg	6.30	6.10	9.50	6.60	6.10	9.50

Control technology

Frequency inverters Fcontrol 3~	Motor protection units 3~	Electronic voltage controllers 3~
		
Page 480	Page 518	Page 506

Airflow direction V

Design K - axial bolted, mounted for short bell mouth, guard grille pressure side

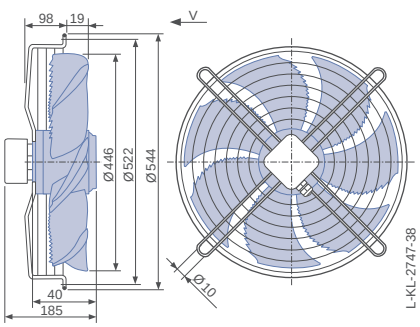

Design I - axial bolted, mounting for bell mouth flange, guard grille pressure side

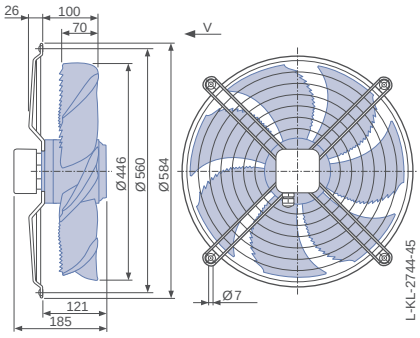

Design H - pipe sockets with a flange, guard grille pressure side

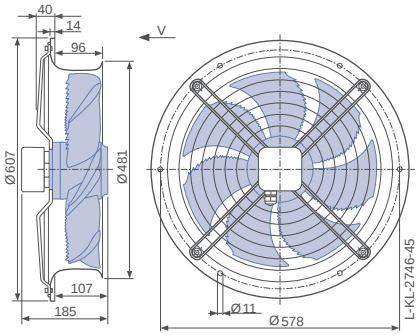

FE2owlet

for three phase alternating current, 4-4 pole

FN045-VD



Description

Motor technology: AC
Rated voltage U_N: **3~ 400 V (Δ/Y) ±10 %***
Rated frequency f_N: **50 Hz*** (60Hz data available)
Input power P_1: **0.54/0.36 kW***
Rated current I_N: **1.10/0.66 A***
Rated speed n_N: **1350/1020 min^{-1}***
Starting current I_A: 4.00 / 1.20 A
Current increase ΔI: 10 %
Thermal class: **THCL155***
Min. permitted ambient temperature $t_{R(min)}$: -40 °C
Max. permitted ambient temperature $t_{R(max)}$: 70 °C
Electrical connection: Terminal box
Number of blades: 7
Protection class: IP54
Motor protection: thermal contact
Blades: Aluminium, uncoated
Rotor: Aluminium, uncoated
Conformity: ErP 2015, CE
ErP-data
Efficiency η_{statA}: 34.0 %
Efficiency: N_{actual} = 42.0 / N_{target} = 40**
* Rated data
**ErP 2015

Characteristic curve

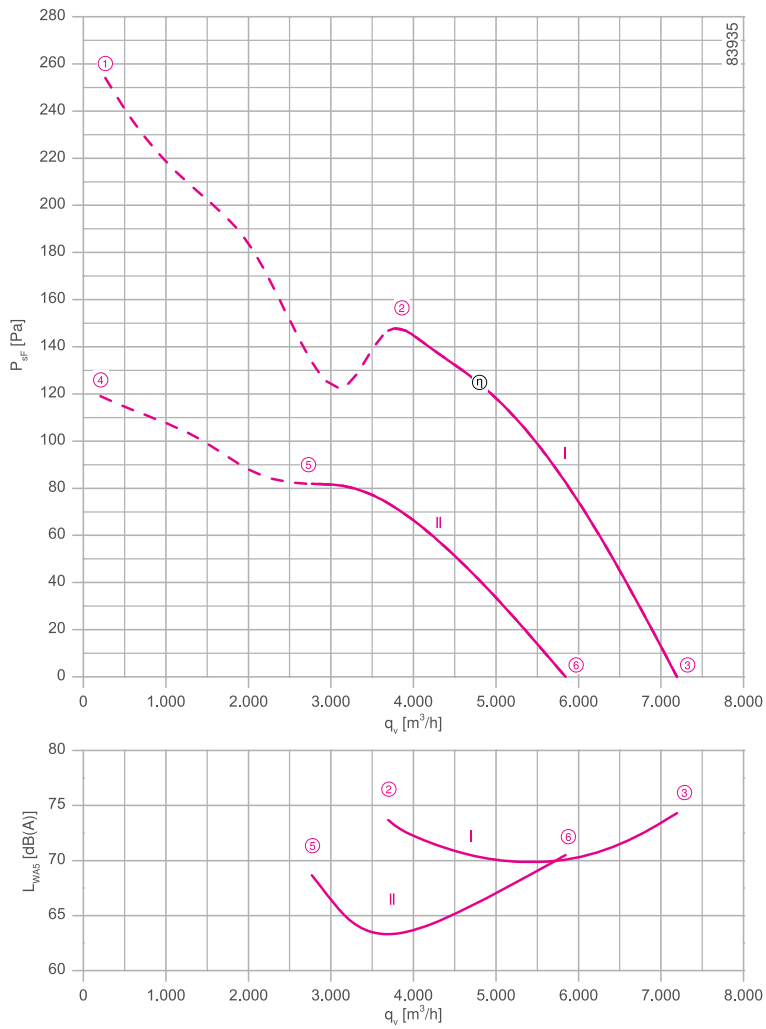

Measured in full bell mouth without guard grille in installation type A according to ISO 5801

Connection diagram Page 531
for airflow direction A 1360-108XB
for airflow direction V 1360-108XA

System components Page 430

Dimensions mm

Airflow direction A

Design W - axial bolted, mounting for short bell mouth, guard grille suction side

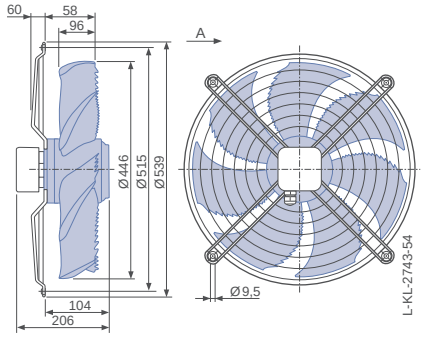

Design Q - square full bell mouth, guard grille suction side

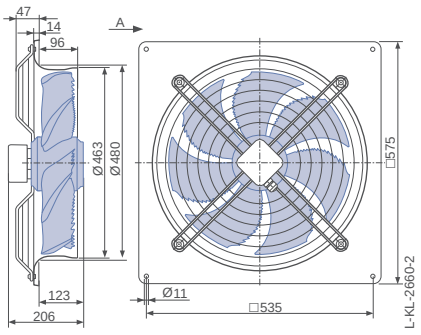

Airflow direction V

Design K - axial bolted, mounted for short bell mouth, guard grille pressure side

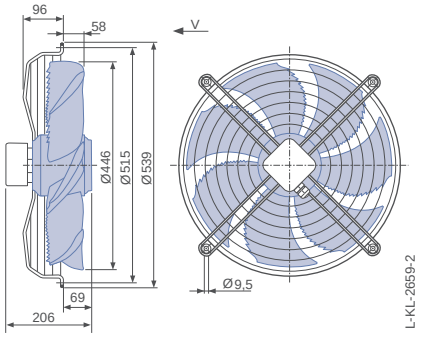

Performance data

Type	Connection	Characteristic curve	Voltage U V	Operating point	Current I A	Input power P_1 W	Speed n min^{-1}	Suction side sound power level L_{WA5} dB(A)
FN045-VD_.4F._7P1	Δ	I	400	①	1.30	680	1300	
			400*	②	**1.10***	**540***	**1350***	74
			400	③	0.96	440	1390	74
	Y	II	400	④	0.76	420	900	
			400*	⑤	**0.66***	**360***	**1020***	69
			400	⑥	0.60	330	1130	71

*rated data

Fan ordering information

Airflow direction A | **Airflow direction V**

Design	W (guard grille suction side)	Q (guard grille suction side)	K (guard grille pressure side)	F (without guard grille)	F (guard grille pressure side)	Q (guard grille pressure side)
		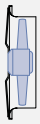		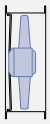	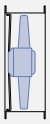	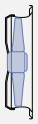
Type	**FN045-VDW.4F.A7P1**	**FN045-VDQ.4F.A7P1**	**FN045-VDK.4F.V7P1**	**FN045-VDF.4F.V7P1**	**FN045-VDF.4F.V7P1**	**FN045-VDQ.4F.V7P1**
Article no.	**153504**	**140106**	**140110**	**140118**	**140538**	**140114**
Weight kg	11.00	14.60	11.00	14.20	14.50	14.40

Control technology

Frequency inverters Fcontrol 3~	Motor protection units 3~	Electronic voltage controllers 3~
		
Page 480	Page 518	Page 506

Design F - flange ring with two flanges, without guard grille

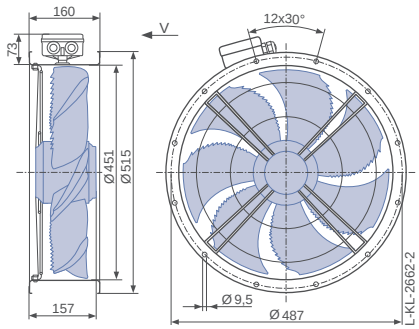

Design F - flange ring with two flanges, guard grille pressure side

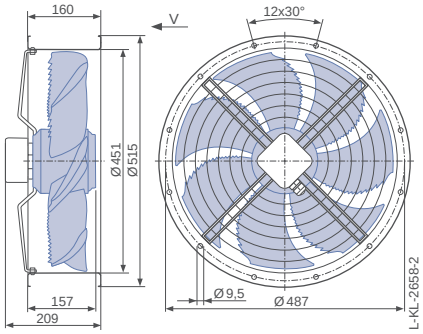

Design Q - square full bell mouth, guard grille pressure side

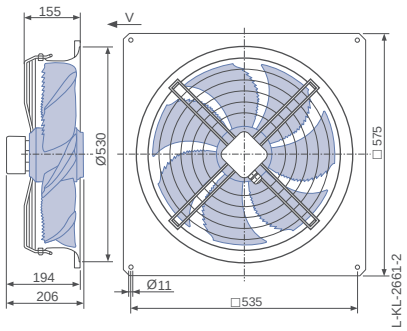

FE2owlet

for three phase alternating current, 6-6 pole

FN045-SD



Description

Motor technology: AC
Rated voltage U_N: **3~ 400 V (Δ/Y) ±10 %***
Rated frequency f_N: **50 Hz*** (60Hz data available)
Input power P_1: **180/100 W***
Rated current I_N: **0.50/0.24 A***
Rated speed n_N: **900/ 630 min^{-1}***
Starting current I_A: 1.10 / 0.32 A
Current increase ΔI: 0 %
Thermal class: **THCL155***
Min. permitted ambient temperature $t_{R(min)}$: -40 °C
Max. permitted ambient temperature $t_{R(max)}$: 70 °C
Electrical connection: Terminal box
Number of blades: 7
Protection class: IP54
Motor protection: thermal contact
Blades: Aluminium, uncoated
Rotor: Aluminium, uncoated
Conformity: ErP 2015, CE
ErP-data
Efficiency η_{statA}: 29.0 %
Efficiency: N_{actual} = 40.0 / N_{target} = 40**
* Rated data
**ErP 2015

Characteristic curve

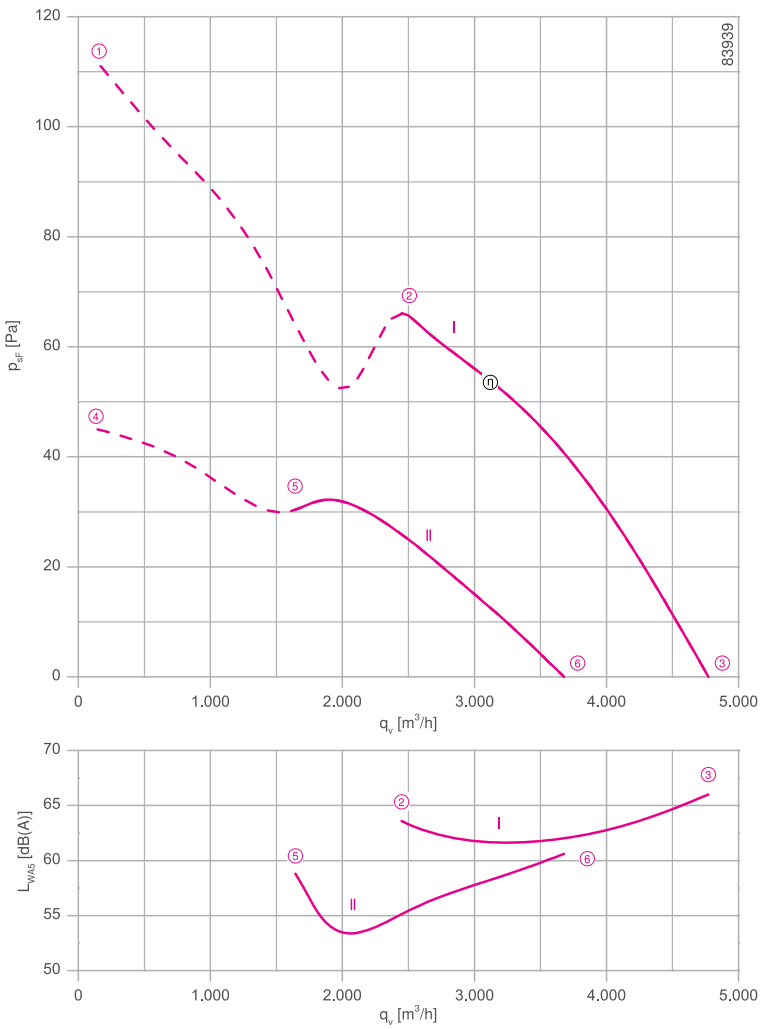

Measured in full bell mouth without guard grille in installation type A according to ISO 5801

Connection diagram Page 531
for airflow direction A 1360-108XB
for airflow direction V 1360-108XA

System components Page 430

Dimensions mm

Airflow direction A

Design D - axial bolted, suspension for full bell mouth, guard grille suction side

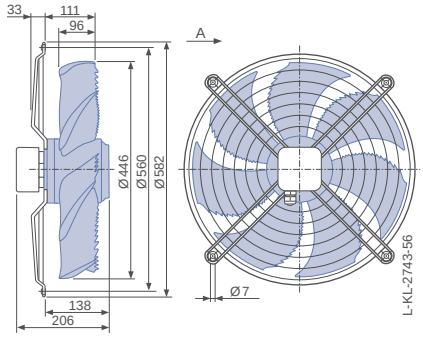

Design Q - square full bell mouth, guard grille suction side

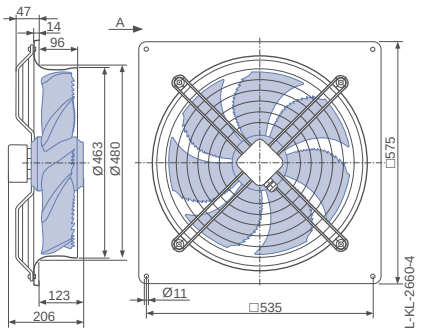

Airflow direction V

Design K - axial bolted, mounted for short bell mouth, guard grille pressure side

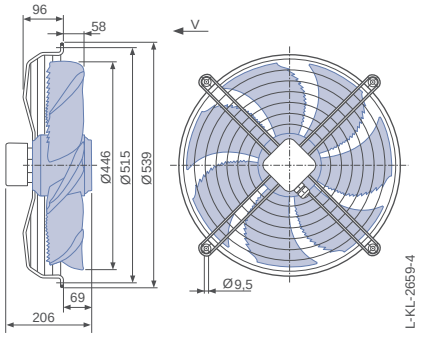

Performance data

Type	Connection	Characteristic curve	Voltage U V	Operating point	Current I A	Input power P_1 W	Speed n min^{-1}	Suction side sound power level L_{WA5} dB(A)
FN045-SD_.4F._7P1	Δ	I	400	①	0.56	220	860	
			400*	②	**0.50***	**180***	**900***	64
			400	③	0.46	150	920	66
	Y	II	400	④	0.27	110	550	
			400*	⑤	**0.24***	**100***	**630***	59
			400	⑥	0.24	95	710	61

*rated data

Fan ordering information

Airflow direction A | **Airflow direction V**

Design	D (guard grille suction side)	Q (guard grille suction side)	K (guard grille pressure side)	F (without guard grille)	F (guard grille pressure side)	Q (guard grille pressure side)
		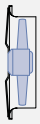		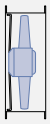	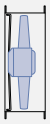	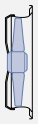
Type	**FN045-SDD.4F.A7P1**	**FN045-SDQ.4F.A7P1**	**FN045-SDK.4F.V7P1**	**FN045-SDF.4F.V7P1**	**FN045-SDF.4F.V7P1**	**FN045-SDQ.4F.V7P1**
Article no.	**155139**	**140108**	**140112**	**140120**	**140540**	**140116**
Weight kg	10.70	14.60	11.00	14.20	14.50	14.40

Control technology

Frequency inverters Fcontrol 3~	Motor protection units 3~	Electronic voltage controllers 3~
		
Page 480	Page 518	Page 506

Design F - flange ring with two flanges, without guard grille

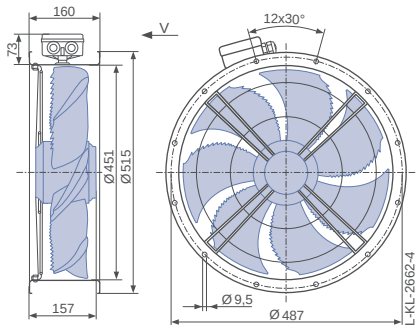

Design F - flange ring with two flanges, guard grille pressure side

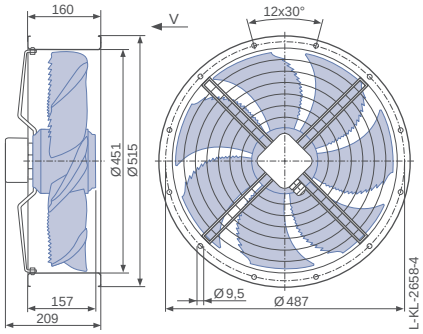

Design Q - square full bell mouth, guard grille pressure side

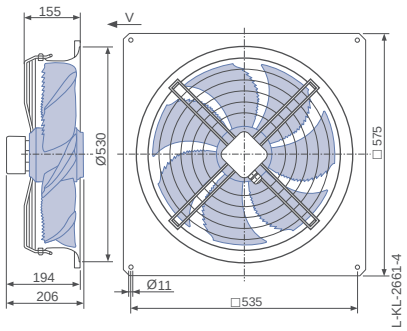

FE2owlet

for single phase alternating current, 4 pole

FN050-4E

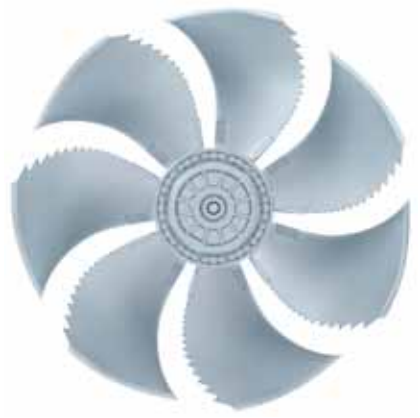

Description

Motor technology: AC
Rated voltage U_N: **1~ 230 V±10 %***
Rated frequency f_N: **50 Hz*** (60Hz data available)
Input power P_1: **0.72 kW***
Rated current I_N: **3.20 A***
Rated speed n_N: **1240 min^{-1}***
Starting current I_A: 6.50 A
Current increase ΔI: 0 %
Service capacitor C_{400V}: 16.0 µF
Thermal class: **THCL155***
Min. permitted ambient temperature $t_{R(min)}$: -25 °C
Max. permitted ambient temperature $t_{R(max)}$: 70 °C
Electrical connection: Terminal box
Number of blades: 7
Protection class: IP54
Motor protection: thermal contact
Blades: Aluminium, uncoated
Rotor: Aluminium, uncoated
Conformity: ErP 2015, CE
ErP-data
Efficiency η_{statA}: 32.9 %
Efficiency: N_{actual} = 40.3 / N_{target} = 40**
* Rated data
**ErP 2015

Connection diagram Page 531
for airflow direction A 1360-104XB
for airflow direction V 1360-104XA

System components Page 430

Characteristic curve

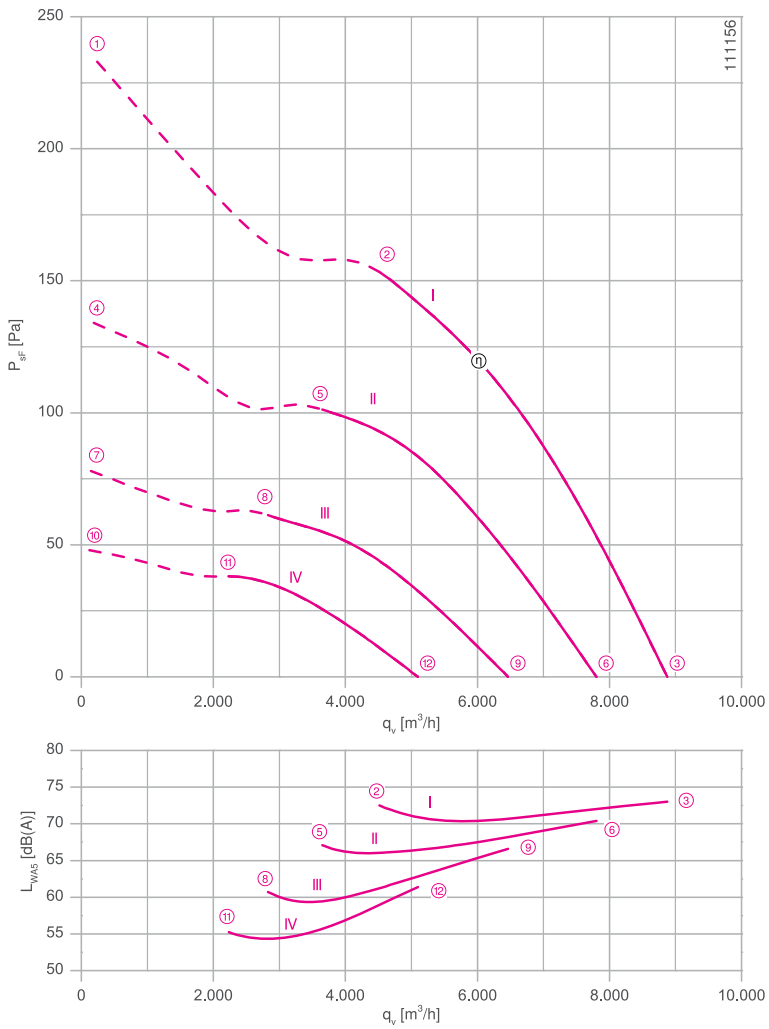

Measured in full bell mouth without guard grille in installation type A according to ISO 5801

Dimensions mm

Airflow direction A

Design W - axial bolted, mounting for short bell mouth, guard grille suction side

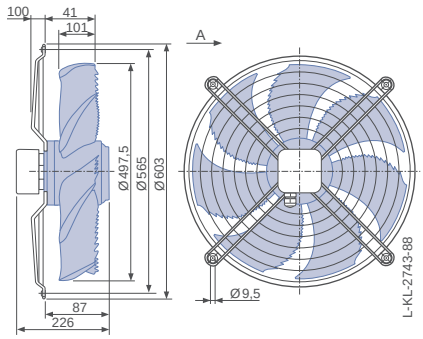

Design Q - square full bell mouth, guard grille suction side

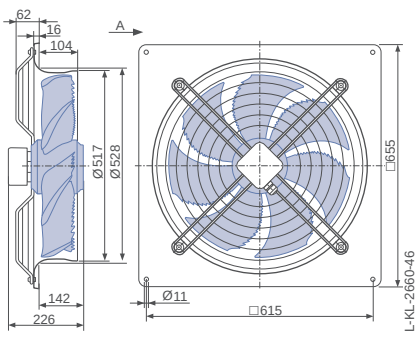

Airflow direction V

Design K - axial bolted, mounted for short bell mouth, guard grille pressure side

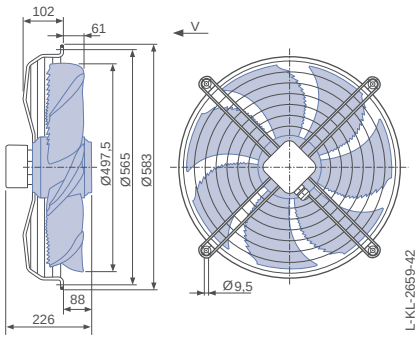

Performance data

Type	Characteristic curve	Voltage U V	Operating point	Current I A	Input power P_1 W	Speed n min^{-1}	Suction side sound power level L_{WA5} dB(A)
FN050-4E_.4I._7	I	230	①	3.70	840	1150	
		230*	②	**3.20***	**720***	**1240***	73
		230	③	2.60	600	1320	73
	II	170	④	3.50	580	880	
		170	⑤	3.20	520	1010	67
		170	⑥	2.70	460	1160	70
	III	135	⑦	3.10	390	660	
		135	⑧	2.90	380	780	61
		135	⑨	2.60	350	960	67
	IV	110	⑩	2.60	270	520	
		110	⑪	2.60	270	620	55
		110	⑫	2.40	260	760	61

*rated data

Fan ordering information

Airflow direction A | **Airflow direction V**

Design	W (guard grille suction side)	Q (guard grille suction side)	K (guard grille pressure side)	F (without guard grille)	F (guard grille pressure side)	Q (guard grille pressure side)
		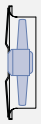		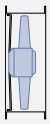	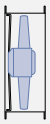	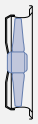
Type	**FN050-4EW.4I.A7P1**	**FN050-4EQ.4I.A7P1**	**FN050-4EK.4I.V7P1**	**FN050-4EF.4I.V7P1**	**FN050-4EF.4I.V7P1**	**FN050-4EQ.4I.V7P1**
Article no.	**167953**	**167952**	**167956**	**167957**	**167958**	**167955**
Weight kg	13.80	20.10	13.30	16.80	17.50	18.30

Control technology

Frequency inverters Fcontrol 1~	Motor protection units 1~	Electronic voltage controllers 1~
		
Page 474	Page 518	Page 492

Design F - flange ring with two flanges, without guard grille

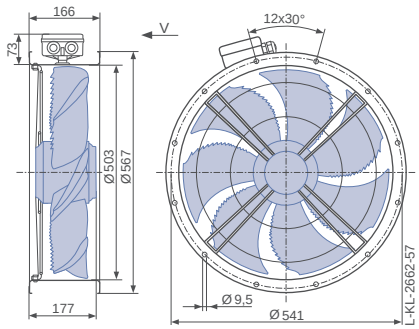

Design F - flange ring with two flanges, guard grille pressure side

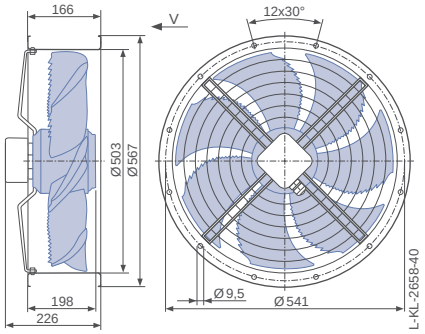

Design Q - square full bell mouth, guard grille pressure side

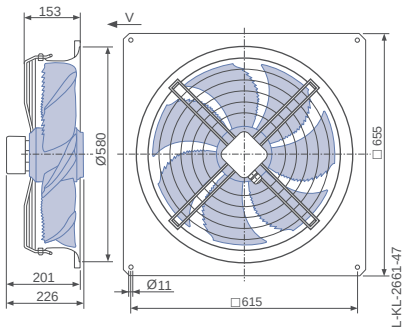

FE2owlet

for single phase alternating current, 6 pole

FN050-6E



Description

Motor technology: AC
Rated voltage U_N: **1~ 230 V±10 %***
Rated frequency f_N: **50 Hz*** (60Hz data available)
Input power P_1: **270 W***
Rated current I_N: **1.25 A***
Rated speed n_N: **900 min^{-1}***
Starting current I_A: 2.60 A
Current increase ΔI: 15 %
Service capacitor C_{400V}: 5.0 µF
Thermal class: **THCL155***
Min. permitted ambient temperature $t_{R(min)}$: -25 °C
Max. permitted ambient temperature $t_{R(max)}$: 70 °C
Electrical connection: Terminal box
Number of blades: 7
Protection class: IP54
Motor protection: thermal contact
Blades: Aluminium, uncoated
Rotor: Aluminium, uncoated
Conformity: ErP 2015, CE
ErP-data
Efficiency η_{statA}: 30.4 %
Efficiency: N_{actual} = 40.6 / N_{target} = 40**
* Rated data
**ErP 2015

Connection diagram Page 531
for airflow direction A 1360-104XB
for airflow direction V 1360-104XA

System components Page 430

Characteristic curve

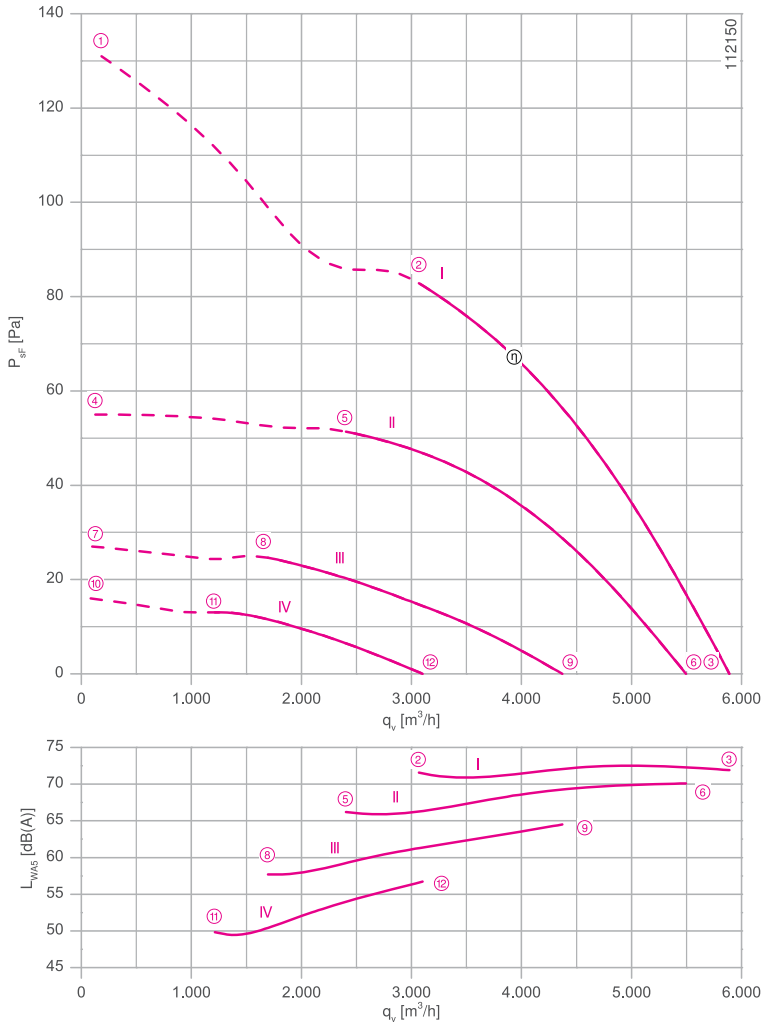

Measured in full bell mouth without guard grille in installation type A according to ISO 5801

Dimensions mm

Airflow direction A

Design W - axial bolted, mounting for short bell mouth, guard grille suction side

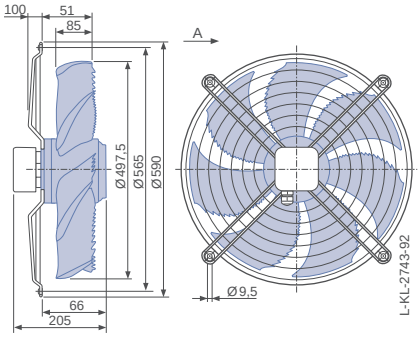

Design W - axial bolted, mounting for short bell mouth, guard grille suction side

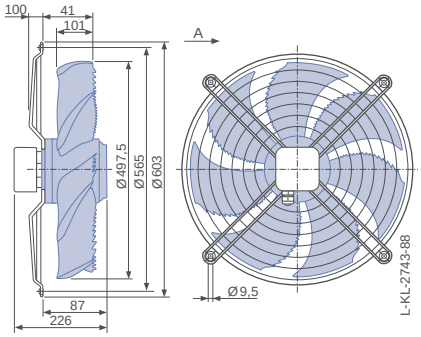

Design Q - square full bell mouth, guard grille suction side

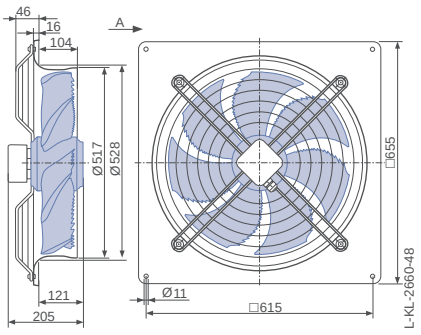

Performance data

Type	Characteristic curve	Voltage U V	Operating point	Current I A	Input power P_1 W	Speed n min^{-1}	Suction side sound power level L_{WA5} dB(A)
FN050-6E_.4F._7P3	I	230	①	1.60	340	830	
		230*	②	**1.25***	**270***	**900***	72
		230	③	0.94	200	940	72
	II	170	④	1.60	240	550	
		170	⑤	1.40	210	710	66
		170	⑥	0.98	160	880	70
	III	135	⑦	1.35	150	380	
		135	⑧	1.30	150	490	58
		135	⑨	1.15	140	710	65
	IV	110	⑩	1.10	100	290	
		110	⑪	1.10	100	360	50
		110	⑫	1.05	100	500	57

*rated data

Fan ordering information

Airflow direction A | **Airflow direction V**

Design	W (guard grille suction side)	W (guard grille suction side)	Q (guard grille suction side)	K (guard grille pressure side)	F (without guard grille)	F (guard grille pressure side)
					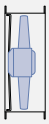	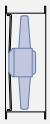
Type	**FN050-6EW.4F.A7P3**	**FN050-4EW.4I.A7P1**	**FN050-6EQ.4F.A7P3**	**FN050-6EK.4F.V7P3**	**FN050-6EF.4F.V7P3**	**FN050-6EF.4F.V7P3**
Article no.	**167961**	**167953**	**167960**	**167964**	**167965**	**167966**
Weight kg	11.10	13.80	18.60	10.60	14.10	14.80

Control technology

Frequency inverters Fcontrol 1~	Motor protection units 1~	Electronic voltage controllers 1~
		
Page 474	Page 518	Page 492

Airflow direction V

Design K - axial bolted, mounted for short bell mouth, guard grille pressure side

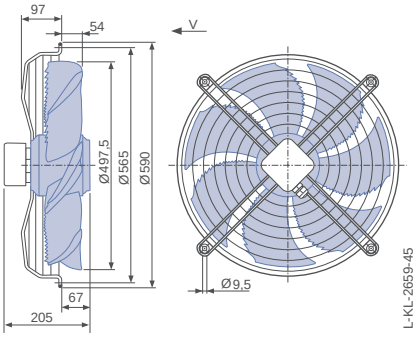

Design F - flange ring with two flanges, without guard grille

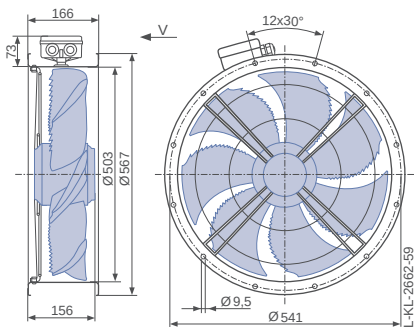

Design F - flange ring with two flanges, guard grille pressure side

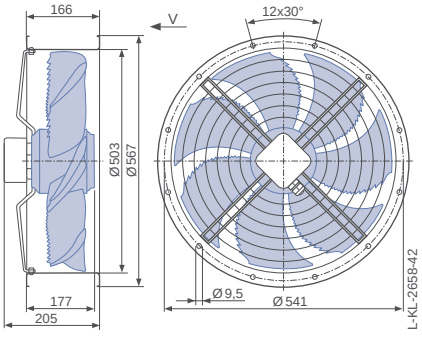

FE2owlet

for single phase alternating current, 8 pole

FN050-8E



Description

Motor technology: AC
Rated voltage U_N: **1~ 230 V±10 %***
Rated frequency f_N: **50 Hz*** (60Hz data available)
Input power P_1: **130 W***
Rated current I_N: **0.62 A***
Rated speed n_N: **640 min^{-1}***
Starting current I_A: 1.00 A
Current increase ΔI: 0 %
Service capacitor C_{400V}: 2.5 µF
Thermal class: **THCL155***
Min. permitted ambient temperature $t_{R(min)}$: -25 °C
Max. permitted ambient temperature $t_{R(max)}$: 70 °C
Electrical connection: Terminal box
Number of blades: 7
Protection class: IP54
Motor protection: thermal contact
Blades: Aluminium, uncoated
Rotor: Aluminium, uncoated
Conformity: CE
ErP-data
Not subject to the regulations of ErP directive (P_1< 125 W)
* Rated data

Characteristic curve

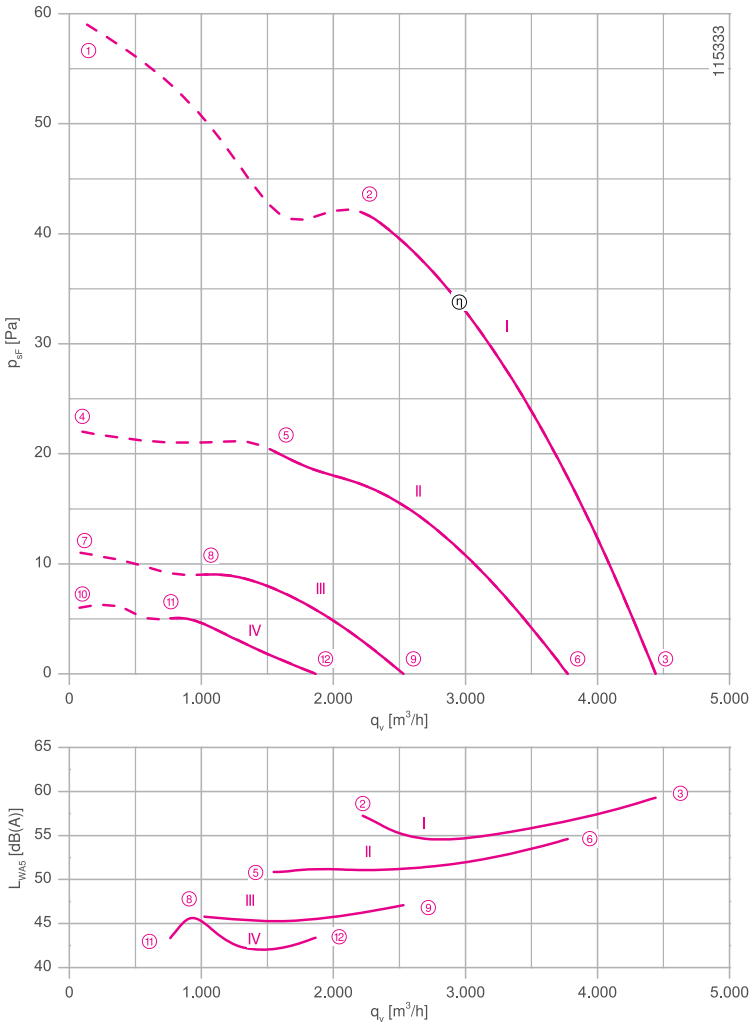

Measured in full bell mouth without guard grille in installation type A according to ISO 5801

Connection diagram Page 531
for airflow direction A 1360-104XB
for airflow direction V 1360-104XA

System components Page 430

Dimensions mm

Airflow direction A

Design Q - square full bell mouth, guard grille suction side

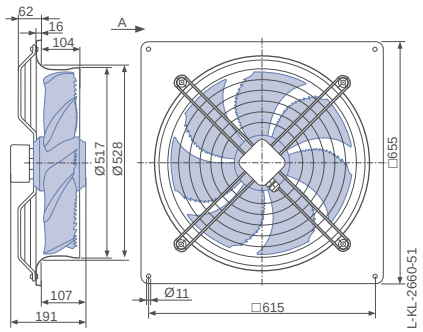

Airflow direction V

Design K - axial bolted, mounted for short bell mouth, guard grille pressure side

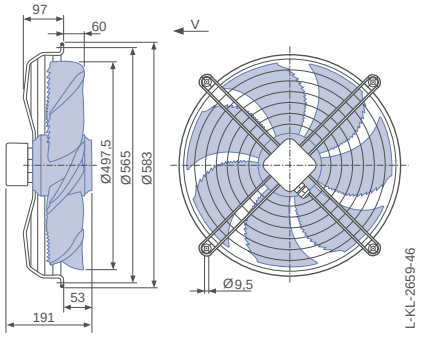

Design F - flange ring with two flanges, without guard grille

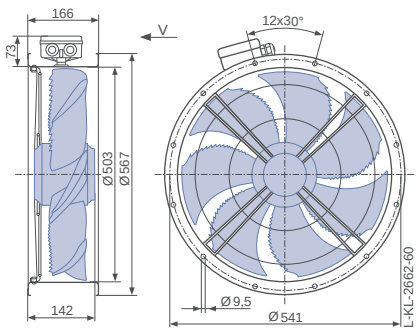

Performance data

Type	Characteristic curve	Voltage U V	Operating point	Current I A	Input power P_1 W	Speed n min^{-1}	Suction side sound power level L_{WA5} dB(A)
FN050-8E_.4C._7P1	I	230	①	0.74	150	580	
		230*	②	**0.62***	**130***	**630***	57
		230	③	0.52	110	680	59
	II	170	④	0.66	100	360	
		170	⑤	0.64	95	440	51
		170	⑥	0.54	85	580	55
	III	135	⑦	0.54	65	250	
		135	⑧	0.54	65	300	46
		135	⑨	0.52	60	390	47
	IV	110	⑩	0.46	42	190	
		110	⑪	0.44	42	220	43
		110	⑫	0.44	42	290	43

*rated data

Fan ordering information

Airflow direction A | **Airflow direction V**

Design	Q (guard grille suction side)	K (guard grille pressure side)	F (without guard grille)	F (guard grille pressure side)	Q (guard grille pressure side)
	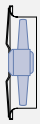		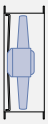	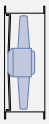	
Type **Article no.**	**FN050-8EQ.4C.A7P1** **171237**	**FN050-8EK.4C.V7P1** **171233**	**FN050-8EF.4C.V7P1** **171235**	**FN050-8EF.4C.V7P1** **171232**	**FN050-8EQ.4C.V7P1** **171234**
Weight kg	16.90	10.10	13.60	14.30	14.60

Control technology

Frequency inverters Fcontrol 1~	Motor protection units 1~	Electronic voltage controllers 1~
		
Page 474	Page 518	Page 492

Design F - flange ring with two flanges, guard grille pressure side

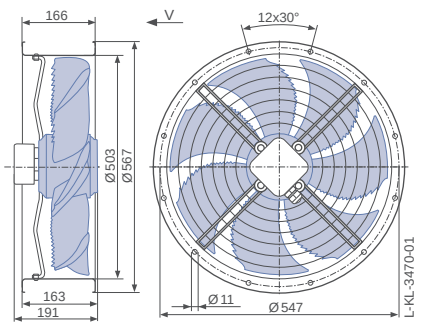

Design Q - square full bell mouth, guard grille pressure side

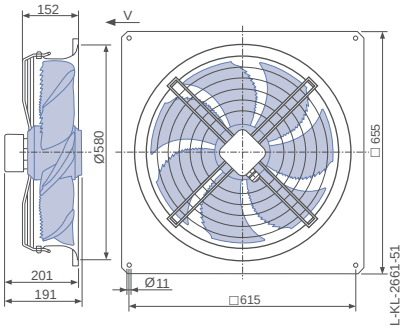

FE2owlet

for three phase alternating current, 4-4 pole

FN050-VD

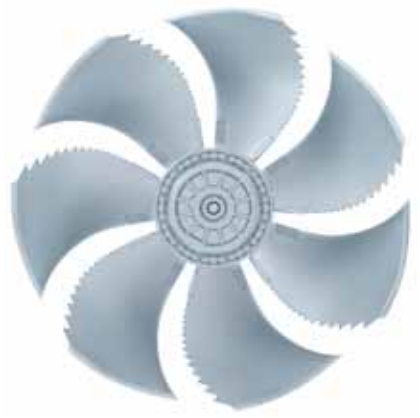

Description

Motor technology: AC
Rated voltage U_N: **3~ 400 V (Δ/Y) ±10 %***
Rated frequency f_N: **50 Hz***
Input power P_1: **0.84/0.54 kW***
Rated current I_N: **1.45/0.96 A***
Rated speed n_N: **1340/ 940 min^{-1}***
Starting current I_A: 5.00 / 1.60 A
Current increase ΔI: 15 %
Thermal class: **THCL155***
Min. permitted ambient temperature $t_{R(min)}$: -40 °C
Max. permitted ambient temperature $t_{R(max)}$: 70 °C
Electrical connection: Terminal box
Number of blades: 7
Protection class: IP54
Motor protection: thermal contact
Blades: Aluminium, uncoated
Rotor: Aluminium, uncoated
Conformity: ErP 2015, CE
ErP-data
Efficiency η_{statA}: 34.2 %
Efficiency: N_{actual} = 41.3 / N_{target} = 40**
* Rated data
**ErP 2015

Characteristic curve

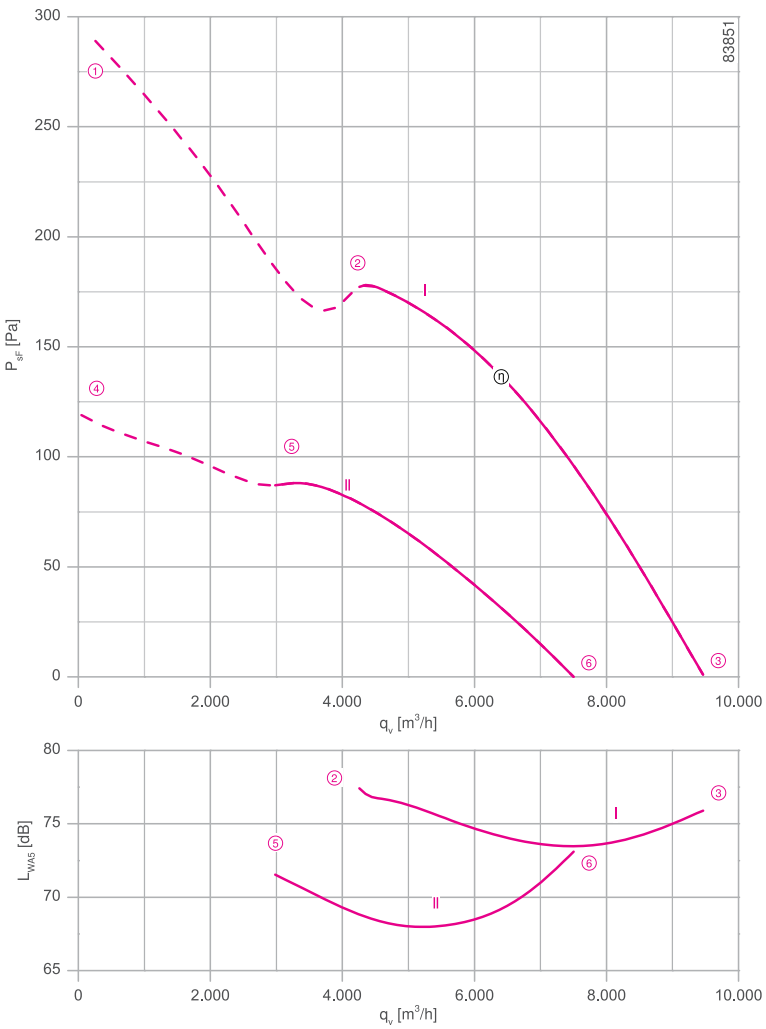

Measured in full bell mouth without guard grille in installation type A according to ISO 5801

Connection diagram Page 531
for airflow direction A 1360-108XB
for airflow direction V 1360-108XA

System components Page 430

Dimensions mm

Airflow direction A

Design W - axial bolted, mounting for short bell mouth, guard grille suction side

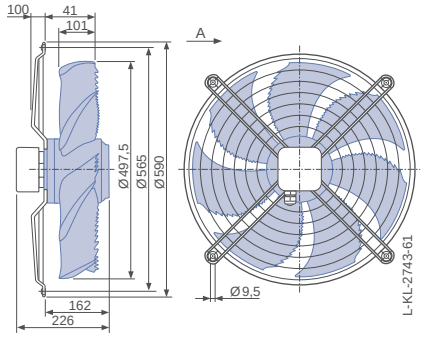

Design Q - square full bell mouth, guard grille suction side

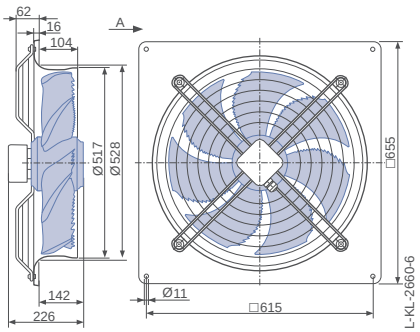

Airflow direction V

Design K - axial bolted, mounted for short bell mouth, guard grille pressure side

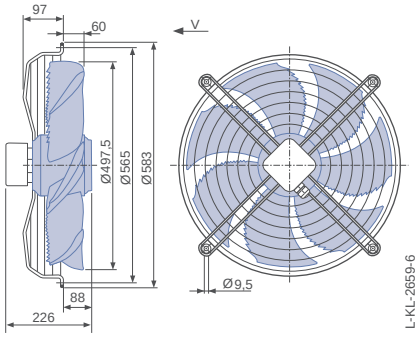

Performance data

Type	Connection	Characteristic curve	Voltage U V	Operating point	Current I A	Input power P_1 W	Speed n min^{-1}	Suction side sound power level L_{WA5} dB(A)
FN050-VD_.4I._7P1	Δ	I	400	①	1.75	1050	1280	
			400*	②	**1.45***	**840***	**1340***	78
			400	③	1.15	620	1390	76
	Y	II	400	④	1.05	580	800	
			400*	⑤	**0.96***	**540***	**940***	72
			400	⑥	0.82	480	1110	73

*rated data

Fan ordering information

Airflow direction A | **Airflow direction V**

Design	W (guard grille suction side)	Q (guard grille suction side)	K (guard grille pressure side)	F (without guard grille)	F (guard grille pressure side)	Q (guard grille pressure side)
		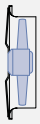		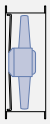	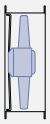	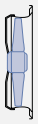
Type	**FN050-VDW.4I.A7P1**	**FN050-VDQ.4I.A7P1**	**FN050-VDK.4I.V7P1**	**FN050-VDF.4I.V7P1**	**FN050-VDF.4I.V7P1**	**FN050-VDQ.4I.V7P1**
Article no.	**156556**	**140083**	**140056**	**140067**	**140073**	**140322**
Weight kg	13.80	20.10	13.30	16.80	17.50	18.30

Control technology

Frequency inverters Fcontrol 3~	Motor protection units 3~	Electronic voltage controllers 3~
		
Page 480	Page 518	Page 506

Design F - flange ring with two flanges, without guard grille

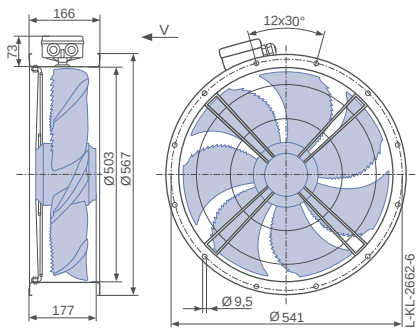

Design F - flange ring with two flanges, guard grille pressure side

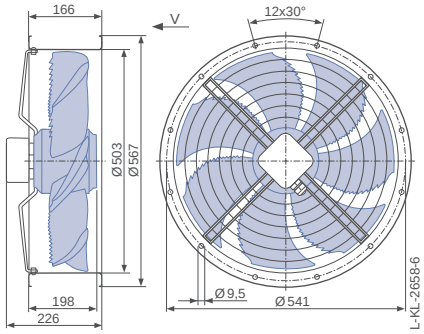

Design Q - square full bell mouth, guard grille pressure side

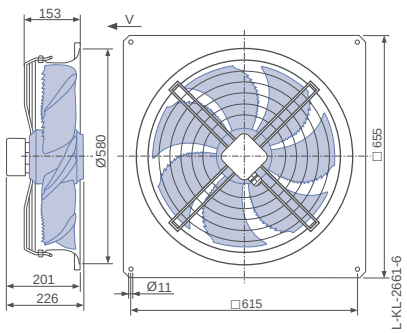

FE2owlet

for three phase alternating current, 6-6 pole

FN050-SD



Description

Motor technology: AC
Rated voltage U_N: **3~ 400 V (Δ/Y) ±10 %***
Rated frequency f_N: **50 Hz*** (60Hz data available)
Input power P_1: **290/150 W***
Rated current I_N: **0.74/0.36 A***
Rated speed n_N: **880/ 590 min^{-1}***
Starting current I_A: 1.50 / 0.40 A
Current increase ΔI: 0 %
Thermal class: **THCL155***
Min. permitted ambient temperature $t_{R(min)}$: -40 °C
Max. permitted ambient temperature $t_{R(max)}$: 70 °C
Electrical connection: Terminal box
Number of blades: 7
Protection class: IP54
Motor protection: thermal contact
Blades: Aluminium, uncoated
Rotor: Aluminium, uncoated
Conformity: ErP 2015, CE
ErP-data
Efficiency η_{statA}: 30.1 %
Efficiency: N_{actual} = 40.2 / N_{target} = 40**
* Rated data
**ErP 2015

Characteristic curve

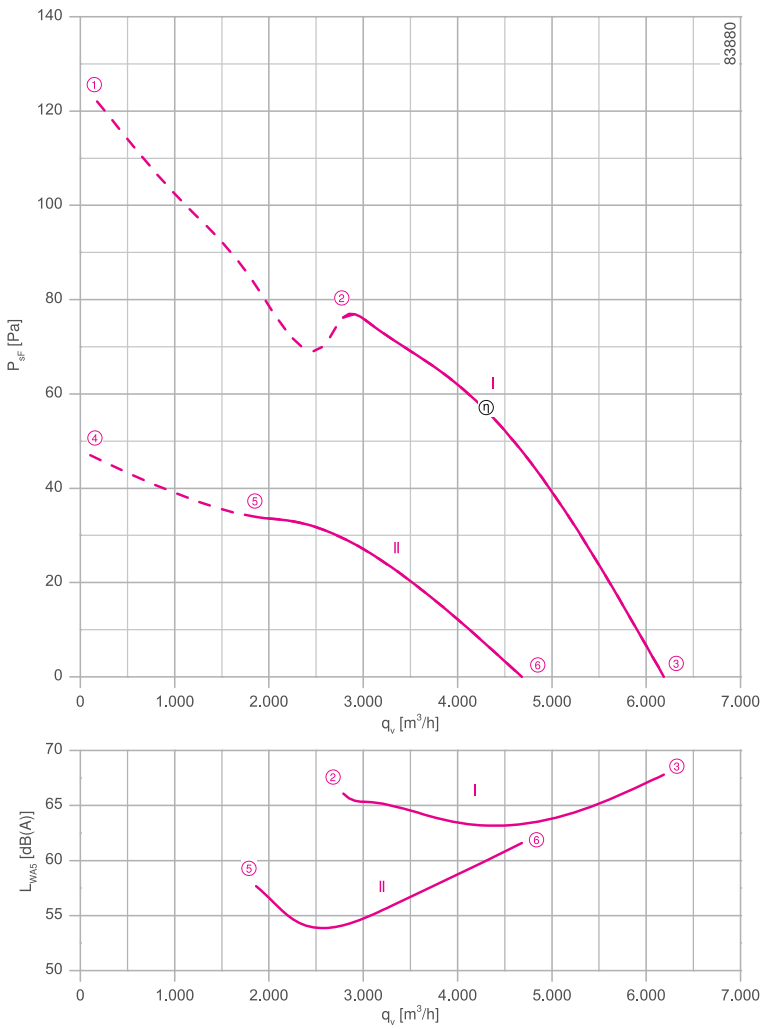

Measured in full bell mouth without guard grille in installation type A according to ISO 5801

Connection diagram Page 531
for airflow direction A 1360-108XB
for airflow direction V 1360-108XA

System components Page 430

Dimensions mm

Airflow direction A

Design W - axial bolted, mounting for short bell mouth, guard grille suction side

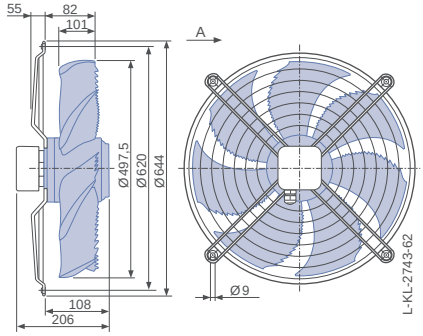

Design Q - square full bell mouth, guard grille suction side

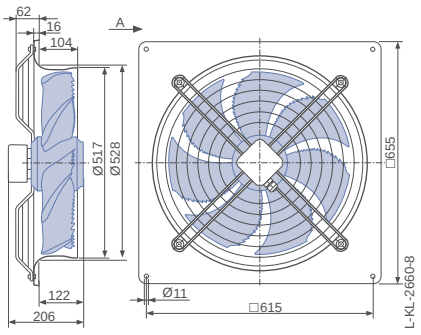

Airflow direction V

Design K - axial bolted, mounted for short bell mouth, guard grille pressure side

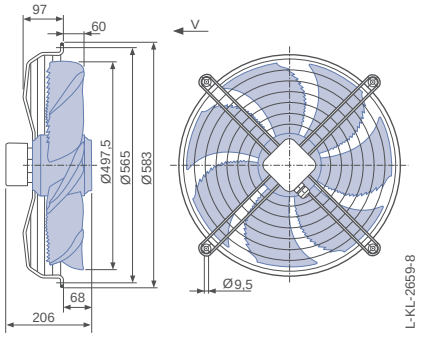

Performance data

Type	Connection	Characteristic curve	Voltage U V	Operating point	Current I A	Input power P_1 W	Speed n min^{-1}	Suction side sound power level L_{WA5} dB(A)
FN050-SD_.4F._7P1	Δ	I	400	①	0.82	350	830	
			400*	②	**0.74***	**290***	**880***	66
			400	③	0.66	230	920	68
	Y	II	400	④	0.38	160	510	
			400*	⑤	**0.36***	**150***	**590***	58
			400	⑥	0.33	140	700	62

*rated data

Fan ordering information

Airflow direction A | **Airflow direction V**

Design	W (guard grille suction side)	Q (guard grille suction side)	K (guard grille pressure side)	F (without guard grille)	F (guard grille pressure side)	Q (guard grille pressure side)
		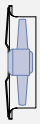		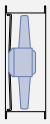	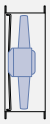	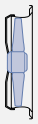
Type	**FN050-SDW.4F.A7P1**	**FN050-SDQ.4F.A7P1**	**FN050-SDK.4F.V7P1**	**FN050-SDF.4F.V7P1**	**FN050-SDF.4F.V7P1**	**FN050-SDQ.4F.V7P1**
Article no.	**155656**	**140085**	**140058**	**140069**	**140075**	**140063**
Weight kg	11.70	18.60	11.80	15.30	16.00	16.30

Control technology

Frequency inverters Fcontrol 3~	Motor protection units 3~	Electronic voltage controllers 3~
		
Page 480	Page 518	Page 506

Design F - flange ring with two flanges, without guard grille

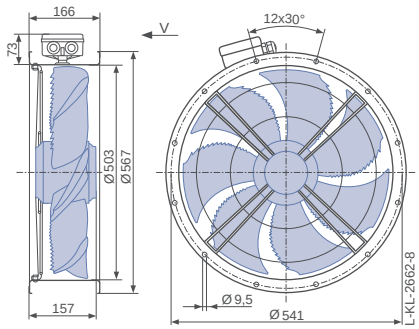

Design F - flange ring with two flanges, guard grille pressure side

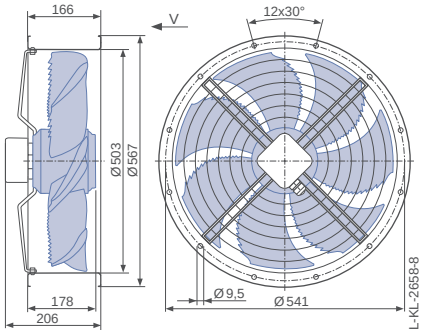

Design Q - square full bell mouth, guard grille pressure side

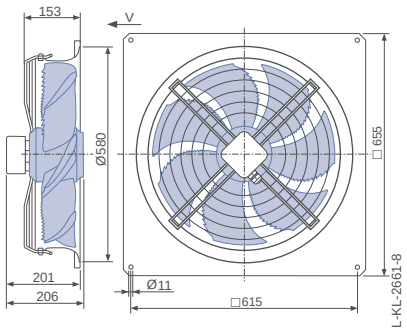

FE2owlet

for three phase alternating current, 8-8 pole

FN050-AD



Description

Motor technology: AC
Rated voltage U_N: **3~ 400 V (Δ/Y) ±10 %***
Rated frequency f_N: **50 Hz*** (60Hz data available)
Input power P_1: **130/80 W***
Rated current I_N: **0.30/0.15 A***
Rated speed n_N: **660/510 min^{-1}***
Starting current I_A: 0.70 / 0.22 A
Current increase ΔI: 0 %
Thermal class: **THCL155***
Min. permitted ambient temperature $t_{R(min)}$: -40 °C
Max. permitted ambient temperature $t_{R(max)}$: 70 °C
Electrical connection: Terminal box
Number of blades: 7
Protection class: IP54
Motor protection: thermal contact
Blades: Aluminium, uncoated
Rotor: Aluminium, uncoated
Conformity: CE
ErP-data
Not subject to the regulations of ErP directive (P_1< 125 W)
* Rated data

Characteristic curve

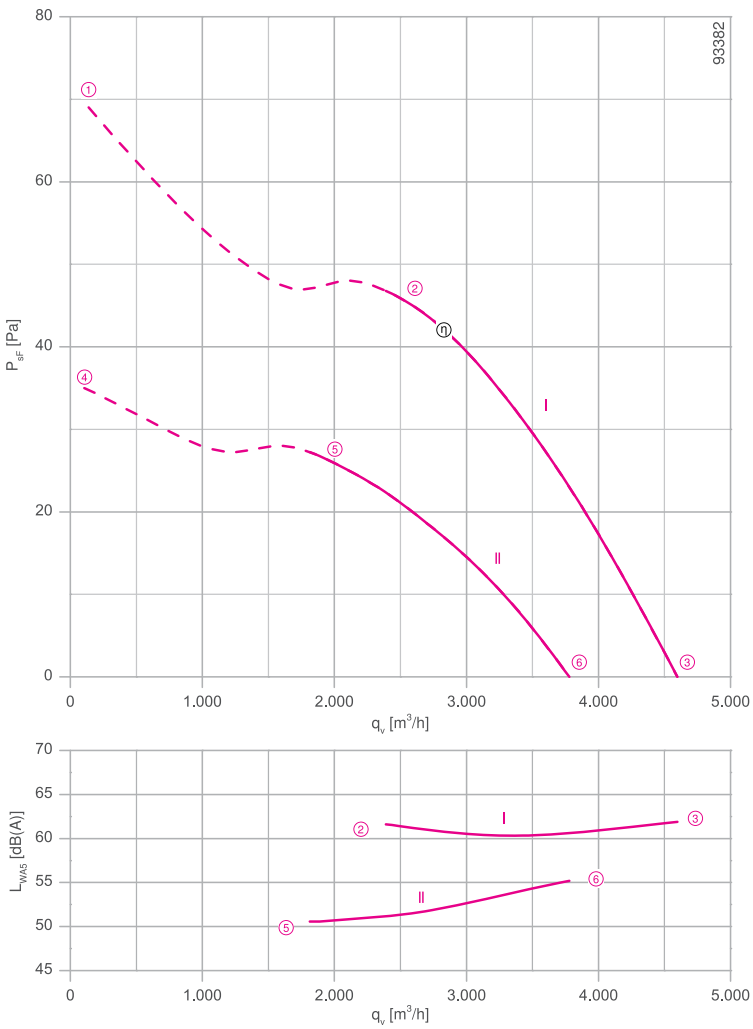

Measured in full bell mouth without guard grille in installation type A according to ISO 5801

Connection diagram Page 531
for airflow direction A 1360-108XB
for airflow direction V 1360-108XA

System components Page 430

Dimensions mm

Airflow direction A

Design Q - square full bell mouth, guard grille suction side

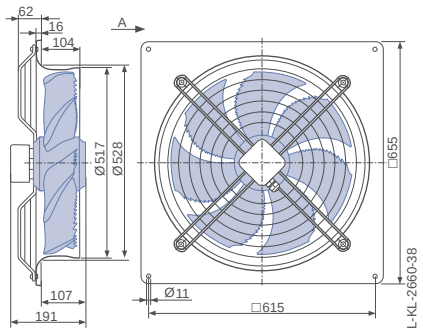

Airflow direction V

Design K - axial bolted, mounted for short bell mouth, guard grille pressure side

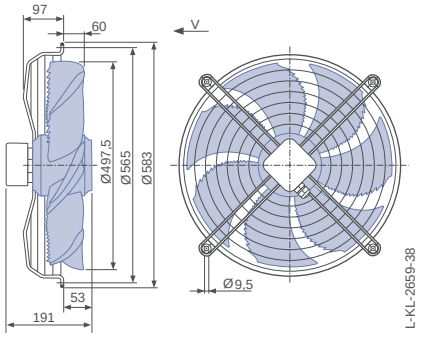

Design F - flange ring with two flanges, without guard grille

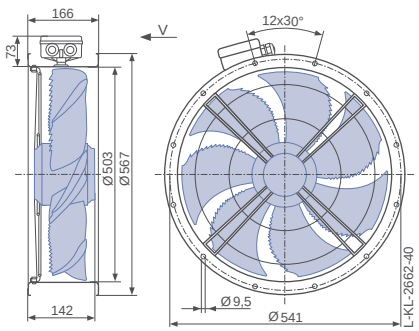

Performance data

Type	Connection	Characteristic curve	Voltage U V	Operating point	Current I A	Input power P_1 W	Speed n min^{-1}	Suction side sound power level L_{WA5} dB(A)
FN050-AD_.4C._7P1	Δ	I	400	①	0.32	150	640	
			400*	②	**0.30***	**130***	**660***	62
			400	③	0.28	100	690	62
	Y	II	400	④	0.16	90	450	
			400*	⑤	**0.15***	**80***	**510***	51
			400	⑥	0.13	70	570	55

*rated data

Fan ordering information

Airflow direction A | **Airflow direction V**

Design	Q (guard grille suction side)	K (guard grille pressure side)	F (without guard grille)	F (guard grille pressure side)	Q (guard grille pressure side)
	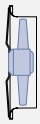		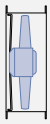		
Type **Article no.**	**FN050-ADQ.4C.A7P1** **160053**	**FN050-ADK.4C.V7P1** **160055**	**FN050-ADF.4C.V7P1** **160057**	**FN050-ADF.4C.V7P1** **160058**	**FN050-ADQ.4C.V7P1** **160056**
Weight kg	16.90	10.10	13.60	16.10	14.60

Control technology

Frequency inverters Fcontrol 3~	Motor protection units 3~	Electronic voltage controllers 3~
		
Page 480	Page 518	Page 506

Design F - flange ring with two flanges, guard grille pressure side

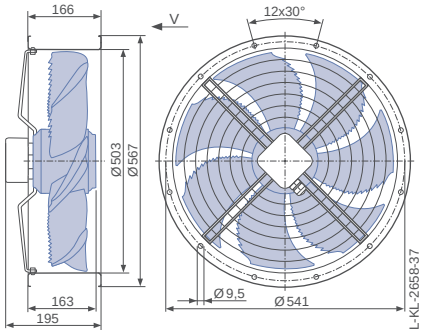

Design Q - square full bell mouth, guard grille pressure side

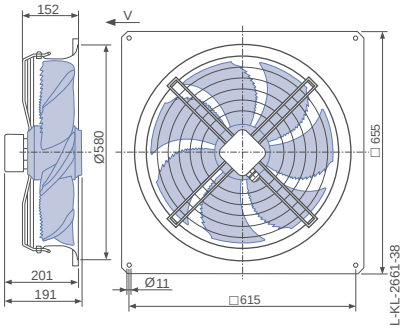

FE2owlet

for single phase alternating current, 6 pole

FN056-6E



Description

Motor technology: AC
Rated voltage U_N: **1~ 230 V±10 %***
Rated frequency f_N: **50 Hz*** (60Hz data available)
Input power P_1: **0.39 kW***
Rated current I_N: **1.80 A***
Rated speed n_N: **910 min^{-1}***
Starting current I_A: 4.20 A
Current increase ΔI: 15 %
Service capacitor C_{400V}: 8.0 µF
Thermal class: **THCL155***
Min. permitted ambient temperature $t_{R(min)}$: -25 °C
Max. permitted ambient temperature $t_{R(max)}$: 70 °C
Electrical connection: Terminal box
Number of blades: 7
Protection class: IP54
Motor protection: thermal contact
Blades: Aluminium, uncoated
Rotor: Aluminium, uncoated
Conformity: ErP 2015, CE
ErP-data
Efficiency η_{statA}: 33.0 %
Efficiency: N_{actual} = 42.0 / N_{target} = 40**
* Rated data
**ErP 2015

Connection diagram Page 531
for airflow direction A 1360-104XB
for airflow direction V 1360-104XA

System components Page 430

Characteristic curve

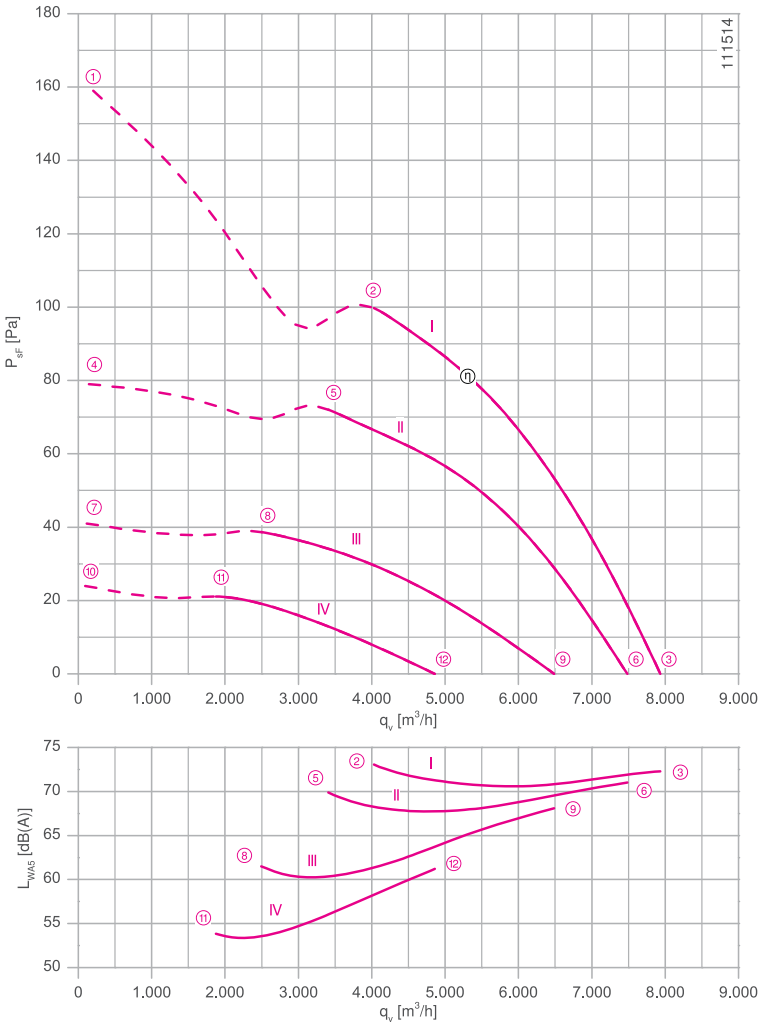

Measured in full bell mouth without guard grille in installation type A according to ISO 5801

Dimensions mm

Airflow direction A

Design W - axial bolted, mounting for short bell mouth, guard grille suction side

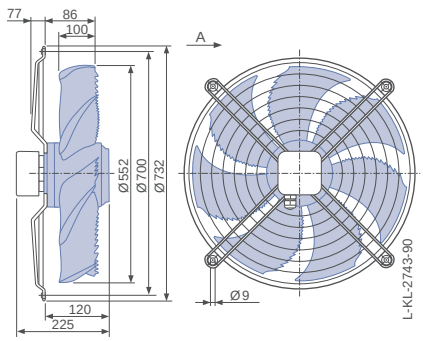

Design Q - square full bell mouth, guard grille suction side

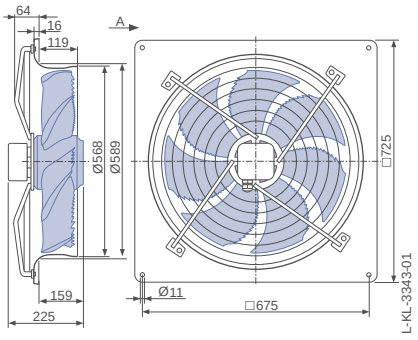

Airflow direction V

Design F - flange ring with two flanges, guard grille suction side

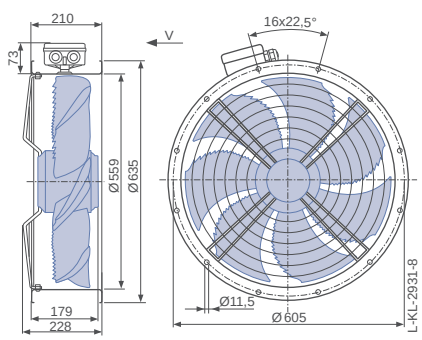

Performance data

Type	Characteristic curve	Voltage U V	Operating point	Current I A	Input power P_1 W	Speed n min^{-1}	Suction side sound power level L_{WA5} dB(A)
FN056-6E_.4I._7P2	I	230	①	2.40	500	850	
		230*	②	**1.80***	**390***	**910***	73
		230	③	1.40	290	950	72
	II	170	④	2.50	370	590	
		170	⑤	2.00	320	770	70
		170	⑥	1.40	230	900	71
	III	135	⑦	2.10	250	430	
		135	⑧	2.00	240	570	62
		135	⑨	1.60	200	780	68
	IV	110	⑩	1.75	160	320	
		110	⑪	1.70	160	420	54
		110	⑫	1.60	160	580	61

*rated data

Fan ordering information

Airflow direction A			Airflow direction V	
Design	W (guard grille suction side)	Q (guard grille suction side)	F (guard grille suction side)	K (guard grille pressure side)	Q (guard grille pressure side)
		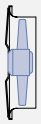	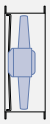		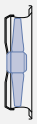
Type	**FN056-6EW.4I.A7P2**	**FN056-6EQ.4I.A7P2**	**FN056-6EF.4I.V7P2**	**FN056-6EK.4I.V7P2**	**FN056-6EQ.4I.V7P2**
Article no.	**167570**	**167571**	**167576**	**167573**	**167574**
Weight kg	14.10	22.20	19.30	13.30	21.00

Control technology

Frequency inverters Fcontrol 1~	Motor protection units 1~	Electronic voltage controllers 1~
		
Page 474	Page 518	Page 492

Design K - axial bolted, mounted for short bell mouth, guard grille pressure side

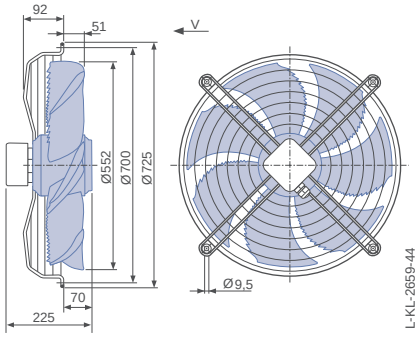

Design Q - square full bell mouth, guard grille pressure side

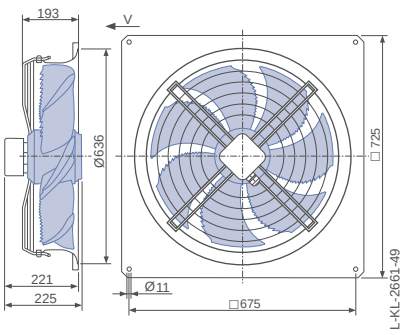

FE2owlet

for three phase alternating current, 4-4 pole

FN056-VD



Description

Motor technology: AC
Rated voltage U_N: **3~ 400 V (Δ/Y) ±10 %***
Rated frequency f_N: **50 Hz*** (60Hz data available)
Input power P_1: **1.05/0.58 kW***
Rated current I_N: **2.20/1.10 A***
Rated speed n_N: **1280/910 min^{-1}***
Starting current I_A: 6.50 / 1.90 A
Current increase ΔI: 0 %
Thermal class: **THCL155***
Min. permitted ambient temperature $t_{R(min)}$: -40 °C
Max. permitted ambient temperature $t_{R(max)}$: 70 °C
Electrical connection: Terminal box
Number of blades: 7
Protection class: IP54
Motor protection: thermal contact
Blades: Aluminium, uncoated
Rotor: Aluminium, uncoated
Conformity: ErP 2015, CE
ErP-data
Efficiency η_{statA}: 33.7 %
Efficiency: N_{actual} = 40.1 / N_{target} = 40**
* Rated data
**ErP 2015

Characteristic curve

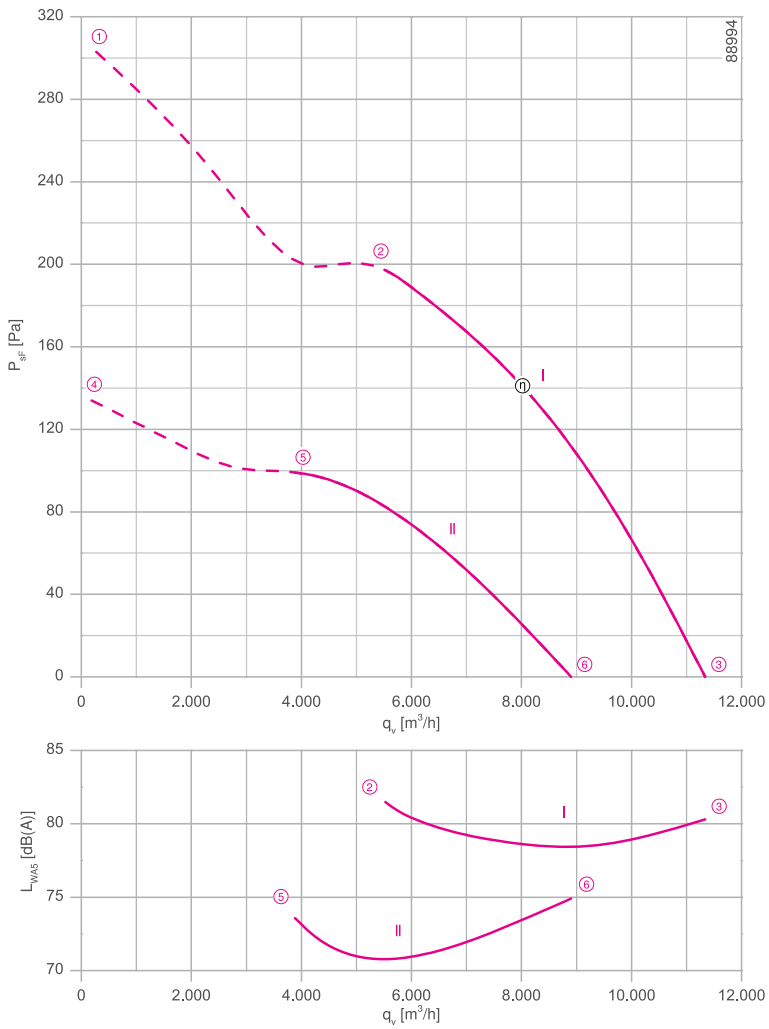

Measured in full bell mouth without guard grille in installation type A according to ISO 5801

Connection diagram Page 531
for airflow direction A 1360-108XB
for airflow direction V 1360-108XA

System components Page 430

Dimensions mm

Airflow direction A

Design W - axial bolted, mounting for short bell mouth, guard grille suction side

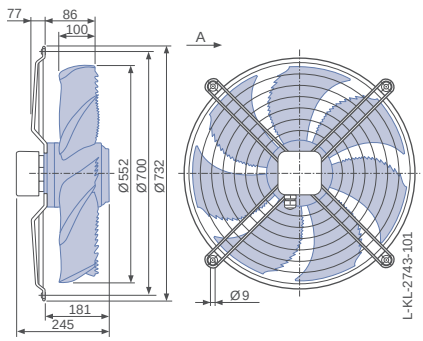

Design Q - square full bell mouth, guard grille suction side

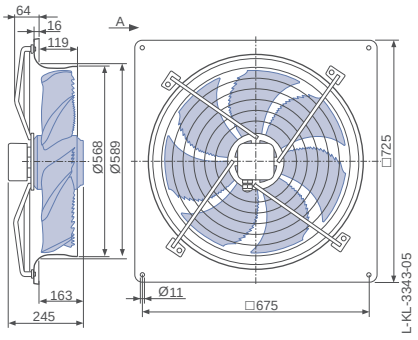

Airflow direction V

Design K - axial bolted, mounted for short bell mouth, guard grille pressure side

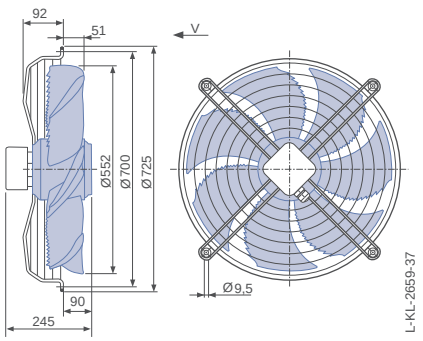

Performance data

Type	Connection	Characteristic curve	Voltage U V	Operating point	Current I A	Input power P_1 W	Speed n min^{-1}	Suction side sound power level L_{WA5} dB(A)
FN056-VD_.4M._7P2	Δ	I	400	①	2.60	1300	1190	
			400*	②	**2.20***	**1050***	**1280***	82
			400	③	1.75	740	1370	80
	Y	II	400	④	1.20	640	790	
			400*	⑤	**1.10***	**580***	**910***	73
			400	⑥	0.94	480	1080	75

*rated data

Fan ordering information

Airflow direction A | **Airflow direction V**

Design	W (guard grille suction side)	Q (guard grille suction side)	K (guard grille pressure side)	F (without guard grille)	F (guard grille pressure side)	Q (guard grille pressure side)
		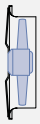		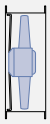	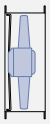	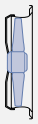
Type	**FN056-VDW.4M.A7P2**	**FN056-VDQ.4M.A7P2**	**FN056-VDK.4M.V7P2**	**FN056-VDF.4M.V7P2**	**FN056-VDF.4M.V7P2**	**FN056-VDQ.4M.V7P2**
Article no.	**159439**	**159441**	**159443**	**159447**	**159446**	**159445**
Weight kg	16.10	24.20	15.40	20.40	21.30	23.20

Control technology

Frequency inverters Fcontrol 3~	Motor protection units 3~	Electronic voltage controllers 3~
		
Page 480	Page 518	Page 506

Design F - flange ring with two flanges, without guard grille

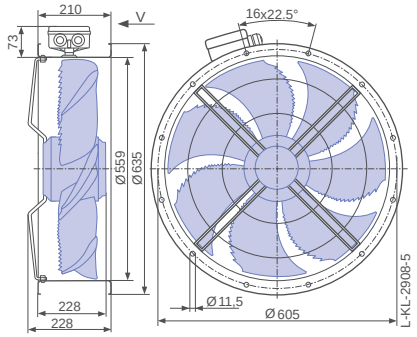

Design F - flange ring with two flanges, guard grille pressure side

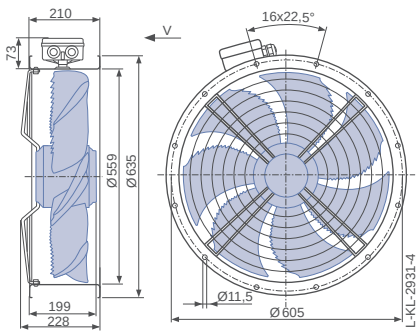

Design Q - square full bell mouth, guard grille pressure side

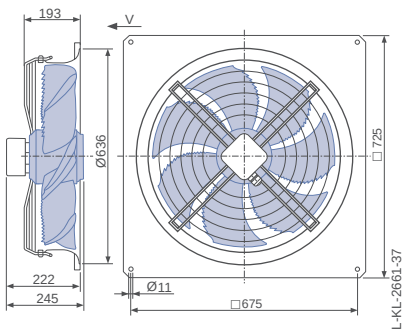

FE2owlet

for three phase alternating current, 6-6 pole

FN056-SD



Description

Motor technology: AC
Rated voltage U_N: **3~ 400 V (Δ/Y) ±10 %***
Rated frequency f_N: **50 Hz*** (60Hz data available)
Input power P_1: **0.34/0.21 kW***
Rated current I_N: **0.70/0.38 A***
Rated speed n_N: **870/ 630 min^{-1}***
Starting current I_A: 2.20 / 0.70 A
Current increase ΔI: 0 %
Thermal class: **THCL155***
Min. permitted ambient temperature $t_{R(min)}$: -40 °C
Max. permitted ambient temperature $t_{R(max)}$: 70 °C
Electrical connection: Terminal box
Number of blades: 7
Protection class: IP54
Motor protection: thermal contact
Blades: Aluminium, uncoated
Rotor: Aluminium, uncoated
Conformity: ErP 2015, CE
ErP-data
Efficiency η_{statA}: 31.9 %
Efficiency: N_{actual} = 41.3 / N_{target} = 40**
* Rated data
**ErP 2015

Characteristic curve

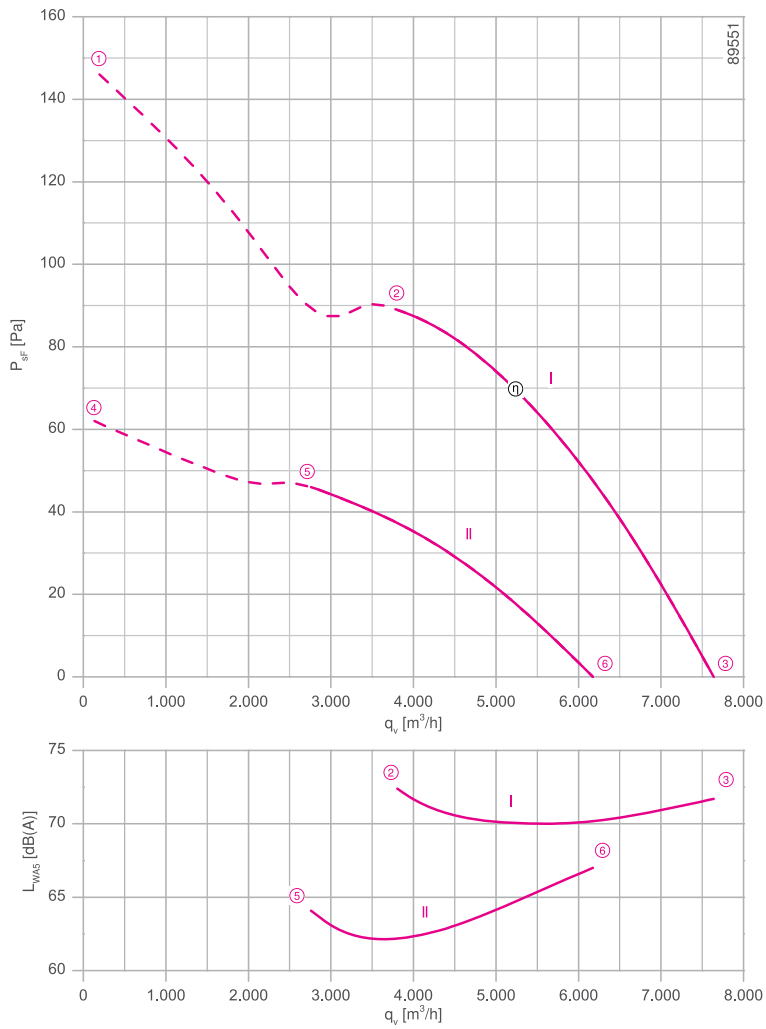

Measured in full bell mouth without guard grille in installation type A according to ISO 5801

Connection diagram Page 531
for airflow direction A 1360-108XB
for airflow direction V 1360-108XA

System components Page 430

Dimensions mm

Airflow direction A

Design W - axial bolted, mounting for short bell mouth, guard grille suction side

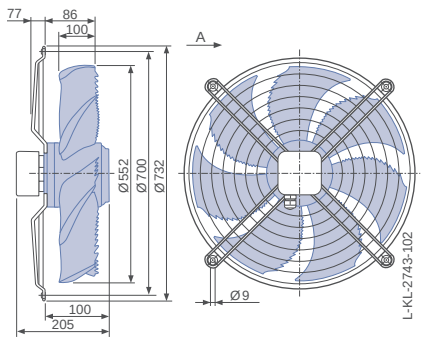

Design Q - square full bell mouth, guard grille suction side

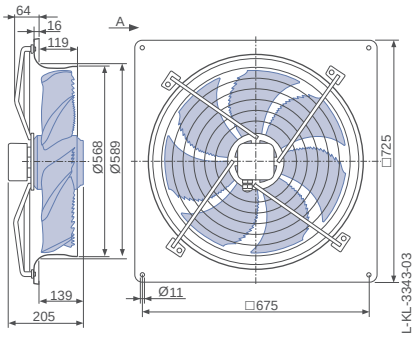

Airflow direction V

Design K - axial bolted, mounted for short bell mouth, guard grille pressure side

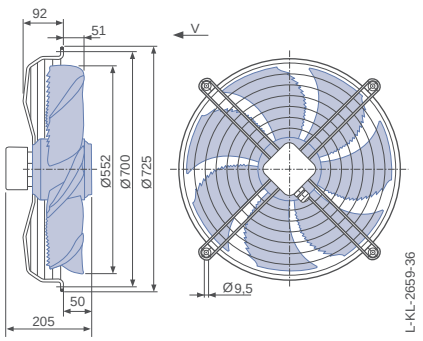

Performance data

Type	Connection	Characteristic curve	Voltage U V	Operating point	Current I A	Input power P_1 W	Speed n min^{-1}	Suction side sound power level L_{WA5} dB(A)
FN056-SD_.4F._7P2	Δ	I	400	①	0.84	440	810	
			400*	②	**0.70***	**340***	**870***	72
			400	③	0.58	250	920	72
	Y	II	400	④	0.42	230	530	
			400*	⑤	**0.38***	**210***	**630***	64
			400	⑥	0.31	170	750	67

*rated data

Fan ordering information

Airflow direction A | **Airflow direction V**

Design	W (guard grille suction side)	Q (guard grille suction side)	K (guard grille pressure side)	F (without guard grille)	F (guard grille pressure side)	Q (guard grille pressure side)
		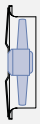		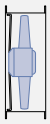	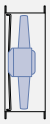	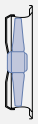
Type	**FN056-SDW.4F.A7P2**	**FN056-SDQ.4F.A7P2**	**FN056-SDK.4F.V7P2**	**FN056-SDF.4F.V7P2**	**FN056-SDF.4F.V7P2**	**FN056-SDQ.4F.V7P2**
Article no.	**159449**	**159451**	**159453**	**159457**	**159456**	**159455**
Weight kg	12.70	22.20	11.90	17.00	17.90	19.80

Control technology

Frequency inverters Fcontrol 3~	Motor protection units 3~	Electronic voltage controllers 3~
		
Page 480	Page 518	Page 506

Design F - flange ring with two flanges, without guard grille

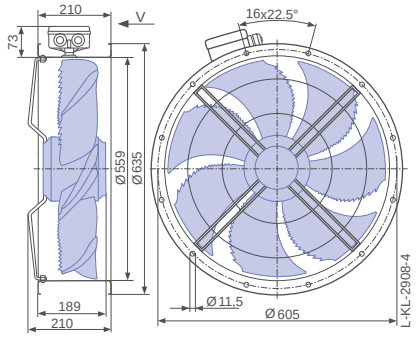

Design F - flange ring with two flanges, guard grille pressure side

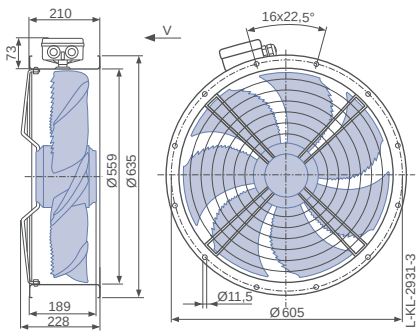

Design Q - square full bell mouth, guard grille pressure side

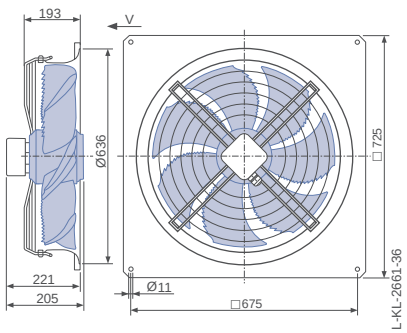

FE2owlet

for single phase alternating current, 4 pole

FN063-4E



Description

Motor technology: AC
Rated voltage U_N: **1~ 230 V±10 %***
Rated frequency f_N: **50 Hz*** (60Hz data available)
Input power P_1: **1.85 kW***
Rated current I_N: **7.70 A***
Rated speed n_N: **1360 min^{-1}***
Current increase ΔI: 20 %
Service capacitor C_{400V}: 35.0 µF
Thermal class: **THCL155***
Min. permitted ambient temperature $t_{R(min)}$: -25 °C
Max. permitted ambient temperature $t_{R(max)}$: 55 °C
Electrical connection: Terminal box
Number of blades: 7
Protection class: IP54
Motor protection: thermal contact
Blades: Aluminium, uncoated
Rotor: Aluminium, uncoated
Conformity: ErP 2015, CE
ErP-data
Efficiency η_{statA}: 36.5 %
Efficiency: N_{actual} = 41.3 / N_{target} = 40**
* Rated data
**ErP 2015

Characteristic curve

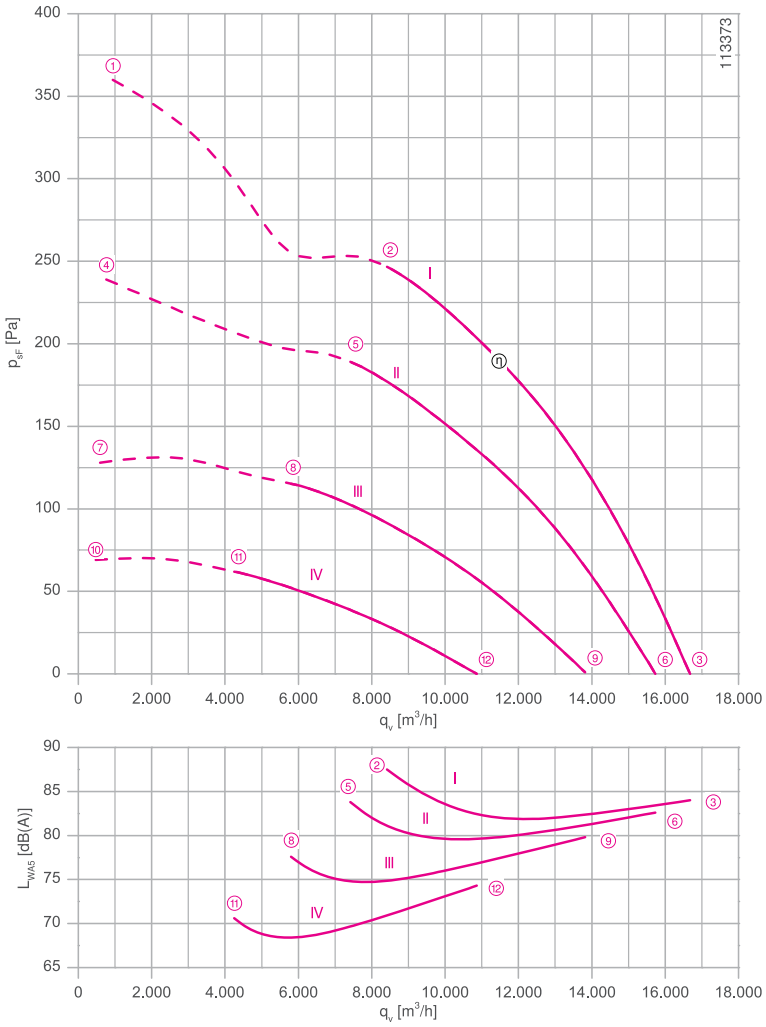

Measured in full bell mouth without guard grille in installation type A according to ISO 5801

Connection diagram Page 531
for airflow direction A 1360-104XB
for airflow direction V 1360-104XA

System components Page 430

Dimensions mm

Airflow direction A

Design W - axial bolted, mounting for short bell mouth, guard grille suction side

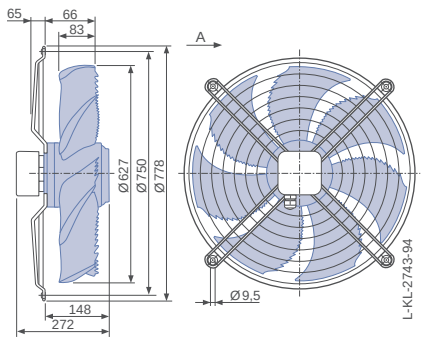

Design Q - square full bell mouth, guard grille suction side

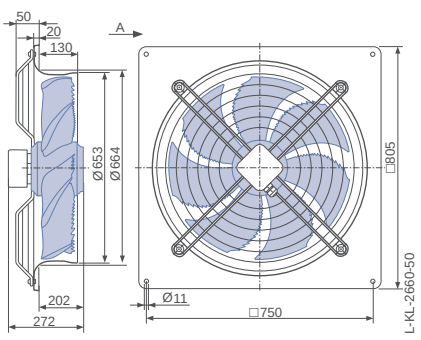

Airflow direction V

Design K - axial bolted, mounted for short bell mouth, guard grille pressure side

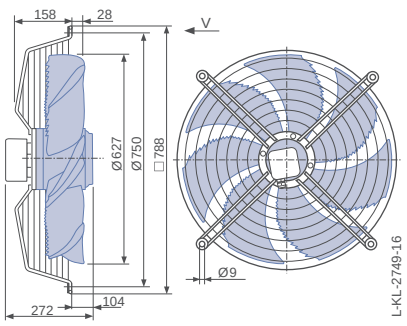

Performance data

Type	Characteristic curve	Voltage U V	Operating point	Current I A	Input power P_1 W	Speed n min^{-1}	Suction side sound power level L_{WA5} dB(A)
FN063-4E_.6N._7P6	I	230	①	9.40	2100	1340	
		230*	②	**8.00***	**1800***	**1380***	88
		230	③	5.80	1300	1420	84
	II	170	④	11.50	1800	1080	
		170	⑤	9.60	1550	1210	84
		170	⑥	7.00	1150	1330	83
	III	135	⑦	11.00	1350	790	
		135	⑧	10.50	1300	950	78
		135	⑨	8.20	1050	1180	80
	IV	110	⑩	9.60	940	580	
		110	⑪	9.40	920	690	71
		110	⑫	8.40	860	920	74

*rated data

Fan ordering information

Airflow direction A			Airflow direction V	
Design	W (guard grille suction side)	Q (guard grille suction side)	K (guard grille pressure side)	F (guard grille pressure side)	Q (guard grille pressure side)
		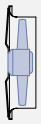		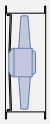	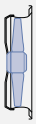
Type	**FN063-4EW.6N.A7P6**	**FN063-4EQ.6N.A7P6**	**FN063-4EK.6N.V7P6**	**FN063-4EF.6N.V7P6**	**FN063-4EQ.6N.V7P6**
Article no.	**169020**	**169021**	**169017**	**169016**	**169018**
Weight kg	25.90	36.20	28.10	32.80	38.00

Control technology

Frequency inverters Fcontrol 1~	Motor protection units 1~	Electronic voltage controllers 1~
		
Page 474	Page 518	Page 492

Design F - flange ring with two flanges, guard grille pressure side

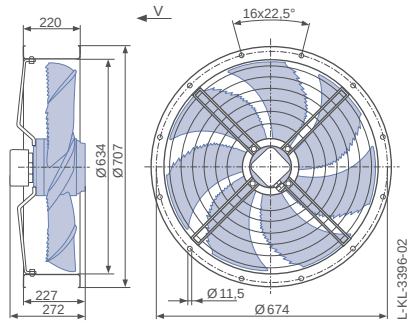

Design Q - square full bell mouth, guard grille pressure side

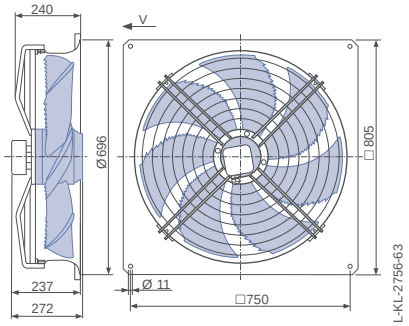

FE2owlet

for single phase alternating current, 6 pole

FN063-6E



Description

Motor technology: AC
Rated voltage U_N: **1~ 230 V±10 %***
Rated frequency f_N: **50 Hz*** (60Hz data available)
Input power P_1: **0.66 kW***
Rated current I_N: **3.00 A***
Rated speed n_N: **860 min^{-1}***
Starting current I_A: 5.50 A
Current increase ΔI: 0 %
Service capacitor C_{400V}: 12.0 µF
Thermal class: **THCL155***
Min. permitted ambient temperature $t_{R(min)}$: -25 °C
Max. permitted ambient temperature $t_{R(max)}$: 70 °C
Electrical connection: Terminal box
Number of blades: 7
Protection class: IP54
Motor protection: thermal contact
Blades: Aluminium, uncoated
Rotor: Aluminium, uncoated
Conformity: ErP 2015, CE
ErP-data
Efficiency η_{statA}: 32.2 %
Efficiency: N_{actual} = 40.0 / N_{target} = 40**
* Rated data
**ErP 2015

Connection diagram Page 531
for airflow direction A 1360-104XB
for airflow direction V 1360-104XA

System components Page 430

Characteristic curve

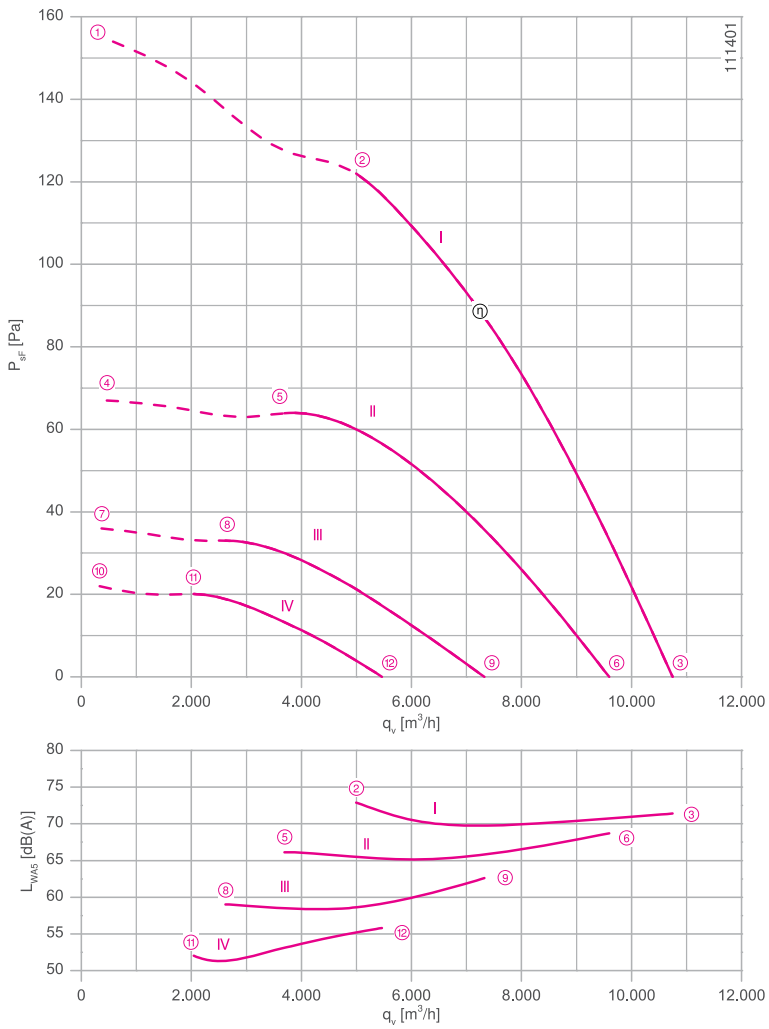

Measured in full bell mouth without guard grille in installation type A according to ISO 5801

Dimensions mm

Airflow direction A

Design W - axial bolted, mounting for short bell mouth, guard grille suction side

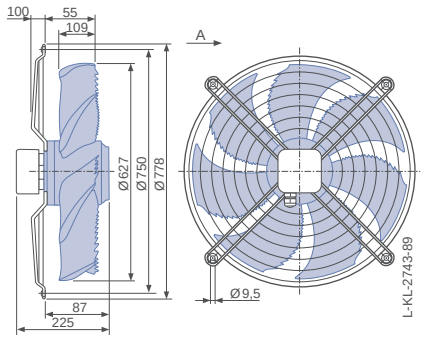

Design Q - square full bell mouth, guard grille suction side

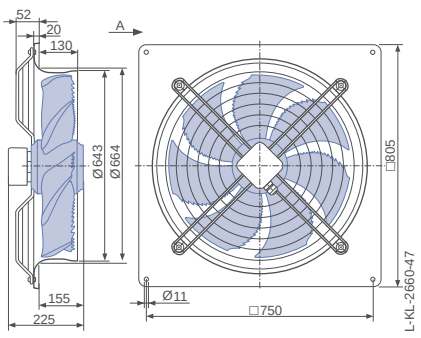

Airflow direction V

Design K - axial bolted, mounted for short bell mouth, guard grille pressure side

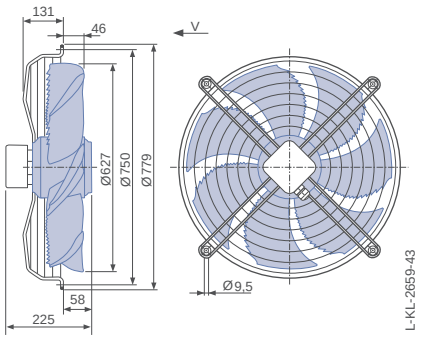

Performance data

Type	Characteristic curve	Voltage U V	Operating point	Current I A	Input power P_1 W	Speed n min^{-1}	Suction side sound power level L_{WA5} dB(A)
FN063-6E_.4I._7P1	I	230	①	3.70	780	770	
		230*	②	**2.90***	**640***	**870***	73
		230	③	2.20	480	930	71
	II	170	④	3.20	480	510	
		170	⑤	3.00	460	630	66
		170	⑥	2.30	370	840	69
	III	135	⑦	2.60	300	370	
		135	⑧	2.50	300	460	59
		135	⑨	2.30	280	640	63
	IV	110	⑩	2.10	200	290	
		110	⑪	2.10	200	350	52
		110	⑫	2.00	190	480	56

*rated data

Fan ordering information

Airflow direction A | **Airflow direction V**

Design	W (guard grille suction side)	Q (guard grille suction side)	K (guard grille pressure side)	F (without guard grille)	F (guard grille pressure side)	Q (guard grille pressure side)
		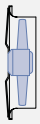		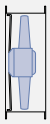	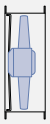	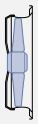
Type	**FN063-6EW.4I.A7P1**	**FN063-6EQ.4I.A7P1**	**FN063-6EK.4I.V7P1**	**FN063-6EF.4I.V7P1**	**FN063-6EF.4I.V7P1**	**FN063-6EQ.4I.V7P1**
Article no.	**167969**	**167968**	**167972**	**167973**	**167974**	**167971**
Weight kg	14.30	24.50	15.40	19.90	20.80	23.90

Control technology

Frequency inverters Fcontrol 1~	Motor protection units 1~	Electronic voltage controllers 1~
		
Page 474	Page 518	Page 492

Design F - flange ring with two flanges, without guard grille

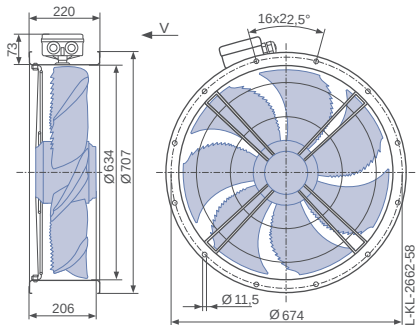

Design F - flange ring with two flanges, guard grille pressure side

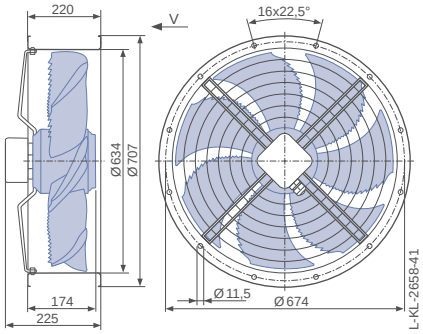

Design Q - square full bell mouth, guard grille pressure side

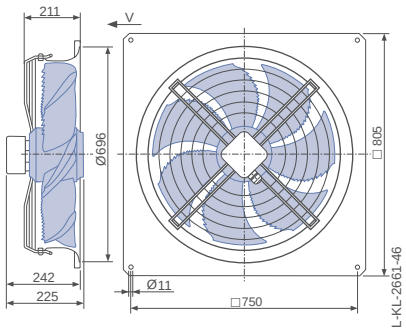

FE2owlet

for three phase alternating current, 4-4 pole

FN063-VD



Description

Motor technology: AC
Rated voltage U_N: **3~ 400 V (Δ/Y) ±10 %***
Rated frequency f_N: **50 Hz*** (60Hz data available)
Input power P_1: **1.75/1.35 kW***
Rated current I_N: **3.70/2.20 A***
Rated speed n_N: **1400/1210 min^{-1}***
Starting current I_A: 20.00 / 6.50 A
Current increase ΔI: 5 %
Thermal class: **THCL155***
Min. permitted ambient temperature $t_{R(min)}$: -40 °C
Max. permitted ambient temperature $t_{R(max)}$: 70 °C
Electrical connection: Terminal box
Number of blades: 7
Protection class: IP54
Motor protection: thermal contact
Blades: Aluminium, uncoated
Rotor: Aluminium, uncoated
Conformity: ErP 2015, CE
ErP-data
Efficiency η_{statA}: 37.5 %
Efficiency: N_{actual} = 42.5 / N_{target} = 40**
* Rated data
**ErP 2015

Characteristic curve

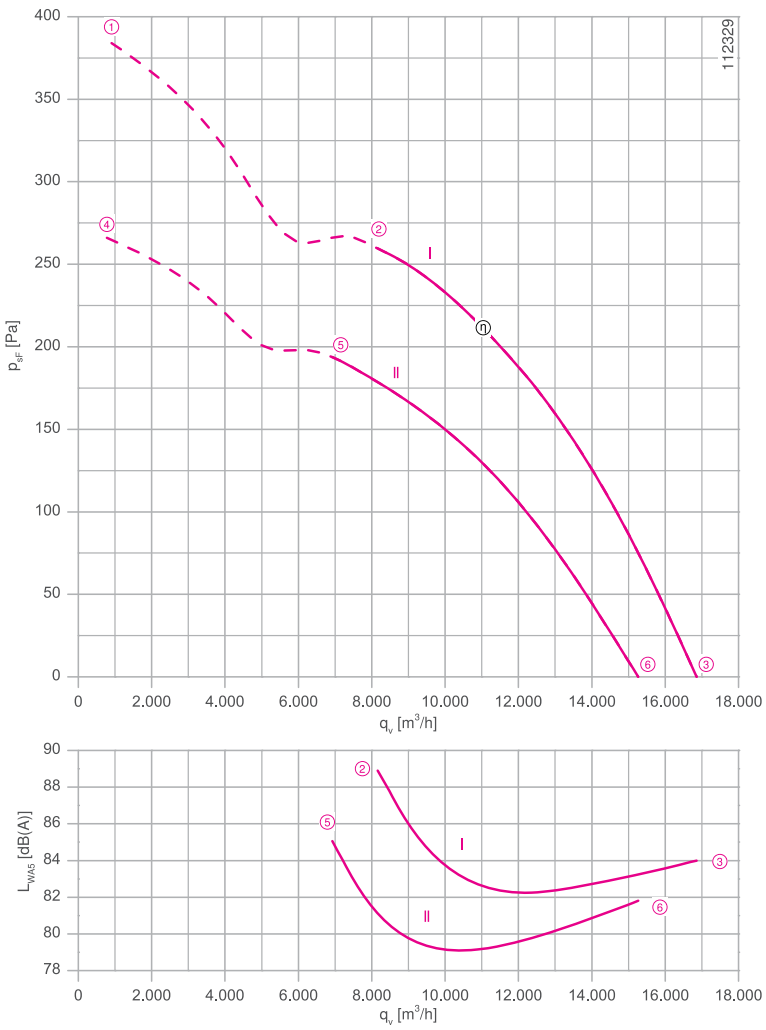

Measured in full bell mouth without guard grille in installation type A according to ISO 5801

Connection diagram Page 531
for airflow direction A 1360-108XB
for airflow direction V 1360-108XA

System components Page 430

Dimensions mm

Airflow direction A

Design W - axial bolted, mounting for short bell mouth, guard grille suction side

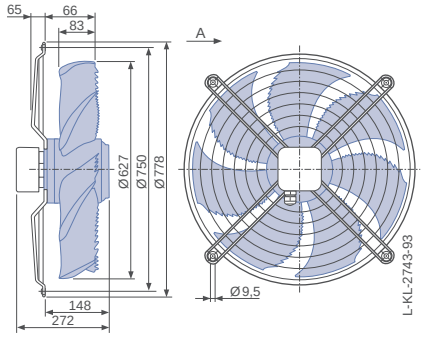

Design Q - square full bell mouth, guard grille suction side

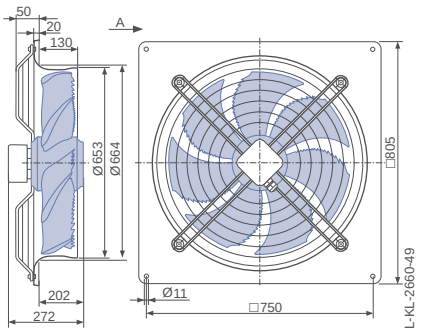

Airflow direction V

Design K - axial bolted, mounted for short bell mouth, guard grille pressure side

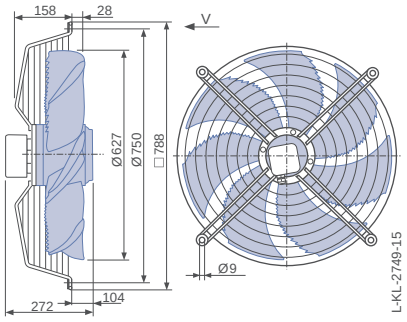

Performance data

Type	Connection	Characteristic curve	Voltage U V	Operating point	Current I A	Input power P_1 W	Speed n min^{-1}	Suction side sound power level L_{WA5} dB(A)
FN063-VD_.6N._7P6	Δ	I	400	①	4.20	2100	1380	
			400*	②	**3.70***	**1750***	**1400***	89
			400	③	3.10	1250	1430	84
	Y	II	400	④	2.60	1550	1140	
			400*	⑤	**2.20***	**1350***	**1210***	85
			400	⑥	1.75	1000	1300	82

*rated data

Fan ordering information

Airflow direction A | **Airflow direction V**

Design	W (guard grille suction side)	Q (guard grille suction side)	K (guard grille pressure side)	F (guard grille pressure side)	Q (guard grille pressure side)
		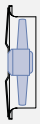		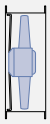	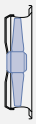
Type	**FN063-VDW.6N.A7P6**	**FN063-VDQ.6N.A7P6**	**FN063-VDK.6N.V7P6**	**FN063-VDF.6N.V7P6**	**FN063-VDQ.6N.V7P6**
Article no.	**169014**	**169015**	**169011**	**169010**	**169012**
Weight kg	25.90	36.20	28.10	32.80	38.00

Control technology

Frequency inverters Fcontrol 3~	Motor protection units 3~	Electronic voltage controllers 3~
		
Page 480	Page 518	Page 506

Design F - flange ring with two flanges, guard grille pressure side

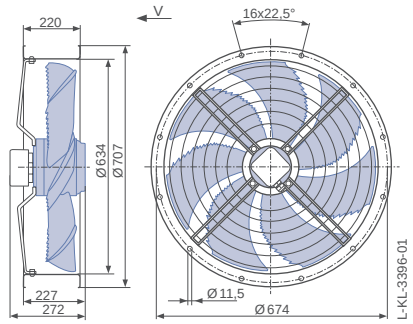

Design Q - square full bell mouth, guard grille pressure side

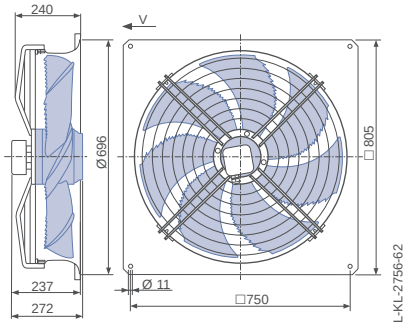

FE2owlet

for three phase alternating current, 4-4 pole

FN063-VD



Description

Motor technology: AC
Rated voltage U_N: **3~ 400 V (Δ/Y) ±10 %***
Rated frequency f_N: **50 Hz***
Input power P_1: **2.60/1.75 kW***
Rated current I_N: **5.00/3.00 A***
Rated speed n_N: **1330/1050 min^{-1}***
Starting current I_A: 19.00 / 6.00 A
Current increase ΔI: 5 %
Thermal class: **THCL155***
Min. permitted ambient temperature $t_{R(min)}$: -40 °C
Max. permitted ambient temperature $t_{R(max)}$: 60 °C
Electrical connection: Terminal box
Number of blades: 7
Protection class: IP54
Motor protection: thermal contact
Blades: Aluminium, uncoated
Rotor: Aluminium, uncoated
Conformity: ErP 2015, CE
ErP-data
Efficiency η_{statA}: 36.4 %
Efficiency: N_{actual} = 40.2 / N_{target} = 40**
* Rated data
**ErP 2015

Characteristic curve

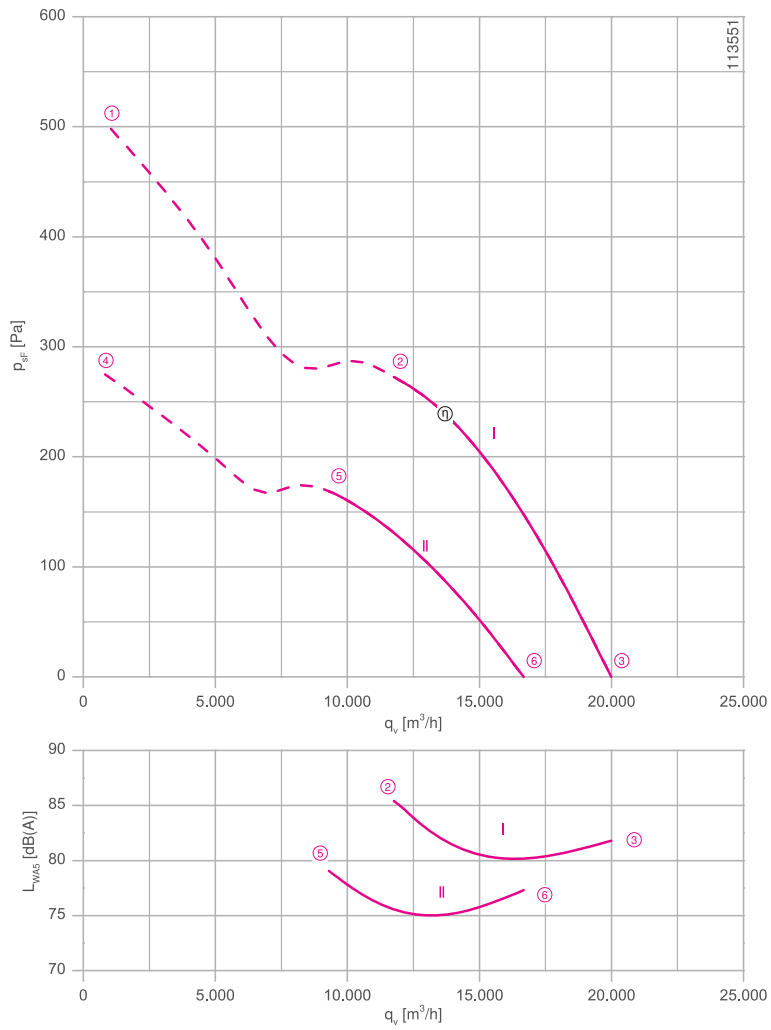

Measured in full bell mouth without guard grille in installation type A according to ISO 5801

Connection diagram Page 531
1360-108XA

System components Page 430

Dimensions mm

Airflow direction V

Design K - axial bolted, mounted for short bell mouth, guard grille pressure side

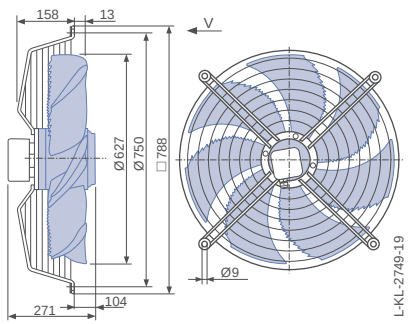

Design F - flange ring with two flanges, without guard grille

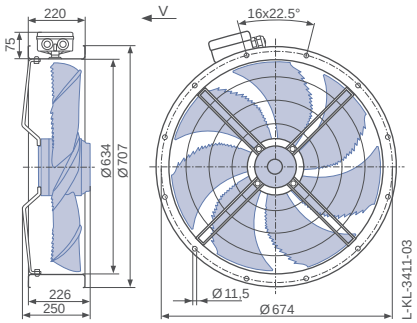

Design F - flange ring with two flanges, guard grille pressure side

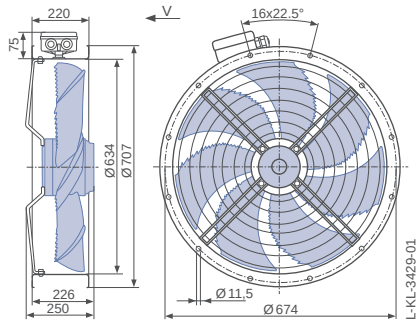

Performance data

Type	Connection	Characteristic curve	Voltage U V	Operating point	Current I A	Input power P_1 W	Speed n min^{-1}	Suction side sound power level L_{WA5} dB(A)
FN063-VD_.6N._7P7	Δ	I	400	①	5.80	3300	1280	
			400*	②	**5.00***	**2600***	**1330***	86
			400	③	4.20	2100	1380	82
	Y	II	400	④	3.30	2000	940	
			400*	⑤	**3.00***	**1750***	**1050***	79
			400	⑥	2.50	1500	1140	77

*rated data

Fan ordering information

Airflow direction V

Design	K (guard grille pressure side)	F (without guard grille)	F (guard grille pressure side)	Q (guard grille pressure side)
		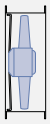	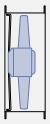	
Type **Article no.**	**FN063-VDK.6N.V7P7** **169699**	**FN063-VDF.6N.V7P7** **169701**	**FN063-VDF.6N.V7P7** **169702**	**FN063-VDQ.6N.V7P7** **169700**
Weight kg	31.10	35.10	35.90	41.20

Control technology

Frequency inverters Fcontrol 3~	Motor protection units 3~	Electronic voltage controllers 3~
		
Page 480	Page 518	Page 506

Design Q - square full bell mouth, guard grille pressure side

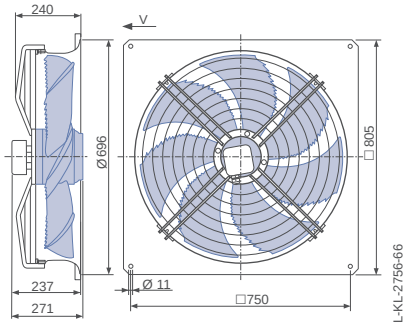

FE2owlet

for three phase alternating current, 6-6 pole

FN063-SD



Description

Motor technology: AC
Rated voltage U_N: **3~ 400 V (Δ/Y) ±10 %***
Rated frequency f_N: **50 Hz*** (60Hz data available)
Input power P_1: **0.62/0.44 kW***
Rated current I_N: **1.25/0.72 A***
Rated speed n_N: **900/ 720 min^{-1}***
Starting current I_A: 4.40 / 1.40 A
Current increase ΔI: 15 %
Thermal class: **THCL155***
Min. permitted ambient temperature $t_{R(min)}$: -40 °C
Max. permitted ambient temperature $t_{R(max)}$: 70 °C
Electrical connection: Terminal box
Number of blades: 7
Protection class: IP54
Motor protection: thermal contact
Blades: Aluminium, uncoated
Rotor: Aluminium, uncoated
Conformity: ErP 2015, CE
ErP-data
Efficiency η_{statA}: 33.8 %
Efficiency: N_{actual} = 41.6 / N_{target} = 40**
* Rated data
**ErP 2015

Characteristic curve

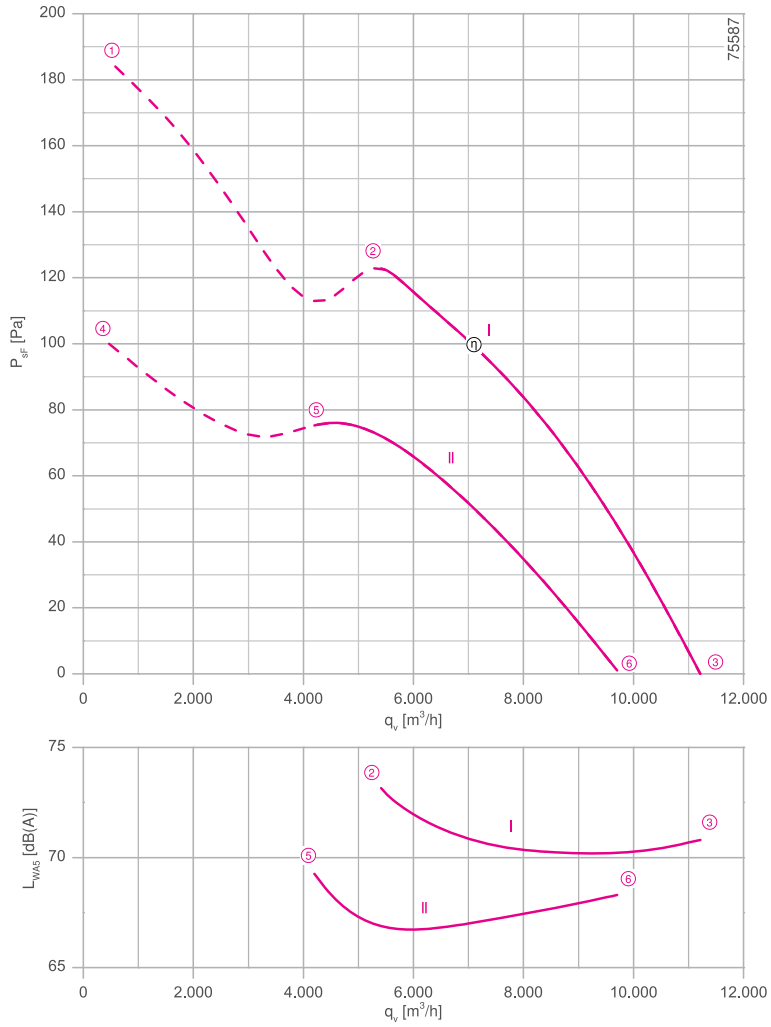

Measured in full bell mouth without guard grille in installation type A according to ISO 5801

Connection diagram Page 531
for airflow direction A 1360-108XB
for airflow direction V 1360-108XA

System components Page 430

Dimensions mm

Airflow direction A

Design Q - square full bell mouth, guard grille suction side

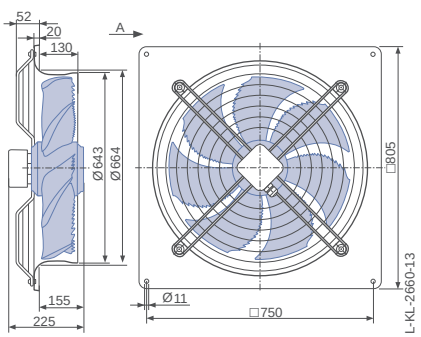

Airflow direction V

Design K - axial bolted, mounted for short bell mouth, guard grille pressure side

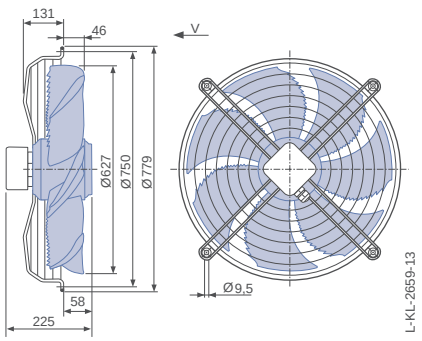

Design F - flange ring with two flanges, without guard grille

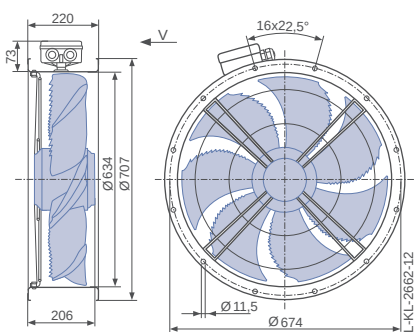

Performance data

Type	Connection	Characteristic curve	Voltage U V	Operating point	Current I A	Input power P_1 W	Speed n min^{-1}	Suction side sound power level L_{WA5} dB(A)
FN063-SD_.4I._7P1	Δ	I	400	①	1.45	800	870	
			400*	②	**1.25***	**620***	**900***	73
			400	③	1.05	440	940	71
	Y	II	400	④	0.86	520	640	
			400*	⑤	**0.72***	**440***	**720***	69
			400	⑥	0.56	330	820	68

*rated data

Fan ordering information

Airflow direction A | **Airflow direction V**

Design	Q (guard grille suction side)	K (guard grille pressure side)	F (without guard grille)	F (guard grille pressure side)	Q (guard grille pressure side)
	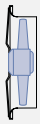		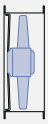	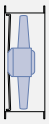	
Type **Article no.**	**FN063-SDQ.4I.A7P1** **141382**	**FN063-SDK.4I.V7P1** **141384**	**FN063-SDF.4I.V7P1** **141386**	**FN063-SDF.4I.V7P1** **141387**	**FN063-SDQ.4I.V7P1** **141385**
Weight kg	24.50	15.40	19.90	20.80	23.90

Control technology

Frequency inverters Fcontrol 3~	Motor protection units 3~	Electronic voltage controllers 3~
		
Page 480	Page 518	Page 506

Design F - flange ring with two flanges, guard grille pressure side

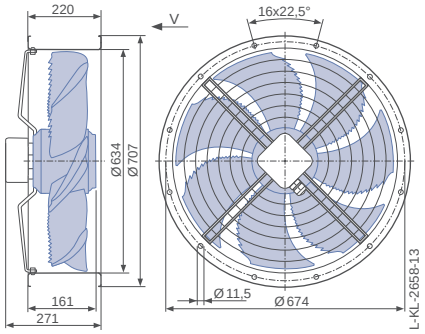

Design Q - square full bell mouth, guard grille pressure side

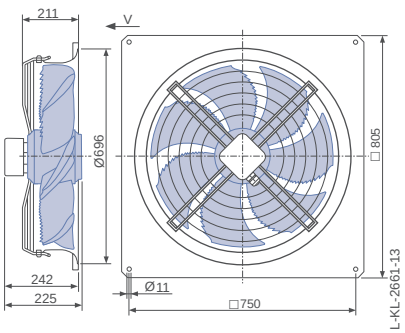

FE2owlet

for three phase alternating current, 12-12 pole

FN063-ND



Description

Motor technology: AC
Rated voltage U_N: **3~ 400 V (Δ/Y) ±10 %***
Rated frequency f_N: **50 Hz*** (60Hz data available)
Input power P_1: **130/70 W***
Rated current I_N: **0.32/0.14 A***
Rated speed n_N: **430/ 320 min^{-1}***
Starting current I_A: 2.40 / 1.05 A
Current increase ΔI: 0 %
Thermal class: **THCL155***
Min. permitted ambient temperature $t_{R(min)}$: -40 °C
Max. permitted ambient temperature $t_{R(max)}$: 70 °C
Electrical connection: Terminal box
Number of blades: 7
Protection class: IP54
Motor protection: thermal contact
Blades: Aluminium, uncoated
Rotor: Aluminium, uncoated
Conformity: CE
ErP-data
Not subject to the regulations of ErP directive (P_1< 125 W)
* Rated data

Characteristic curve

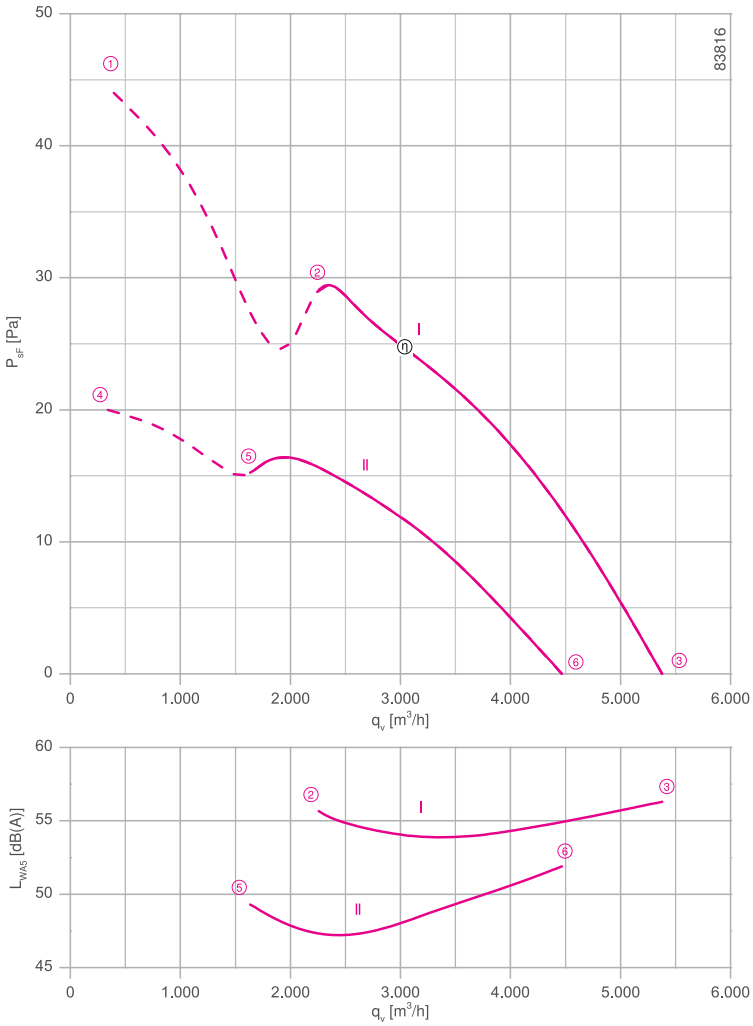

Measured in full bell mouth without guard grille in installation type A according to ISO 5801

Connection diagram Page 531
for airflow direction A 1360-108XB
for airflow direction V 1360-108XA

System components Page 430

Dimensions mm

Airflow direction A

Design Q - square full bell mouth, guard grille suction side

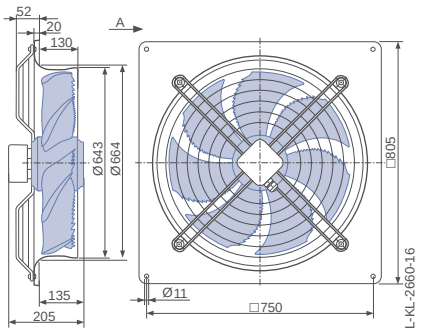

Airflow direction V

Design K - axial bolted, mounted for short bell mouth, guard grille pressure side

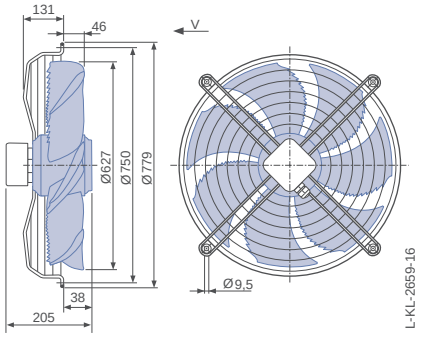

Design F - flange ring with two flanges, without guard grille

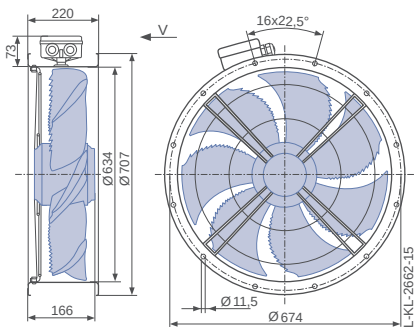

Performance data

Type	Connection	Characteristic curve	Voltage U V	Operating point	Current I A	Input power P_1 W	Speed n min^{-1}	Suction side sound power level L_{WA5} dB(A)
FN063-ND_.4F._7P1	Δ	I	400	①	0.34	150	410	
			400*	②	**0.32***	**130***	**430***	56
			400	③	0.31	110	460	56
	Y	II	400	④	0.14	75	290	
			400*	⑤	**0.14***	**70***	**320***	49
			400	⑥	0.12	55	380	52

*rated data

Fan ordering information

Airflow direction A | **Airflow direction V**

Design	Q (guard grille suction side)	K (guard grille pressure side)	F (without guard grille)	F (guard grille pressure side)	Q (guard grille pressure side)
	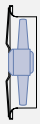		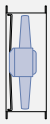		
Type **Article no.**	**FN063-NDQ.4F.A7P1** **141585**	**FN063-NDK.4F.V7P1** **141587**	**FN063-NDF.4F.V7P1** **141589**	**FN063-NDF.4F.V7P1** **141590**	**FN063-NDQ.4F.V7P1** **141588**
Weight kg	22.90	13.60	18.30	19.20	22.30

Control technology

Frequency inverters Fcontrol 3~	Motor protection units 3~	Electronic voltage controllers 3~
		
Page 480	Page 518	Page 506

Design F - flange ring with two flanges, guard grille pressure side

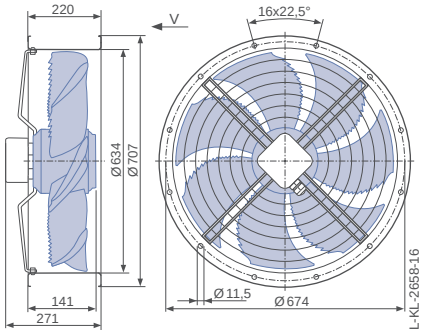

Design Q - square full bell mouth, guard grille pressure side

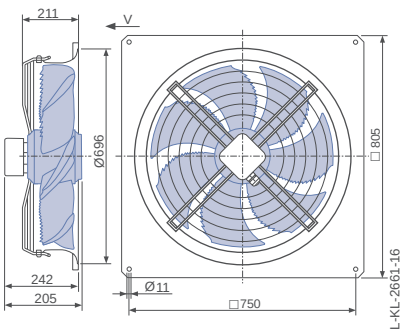

FE2owlet

for three phase alternating current, 4-4 pole

FN071-VD

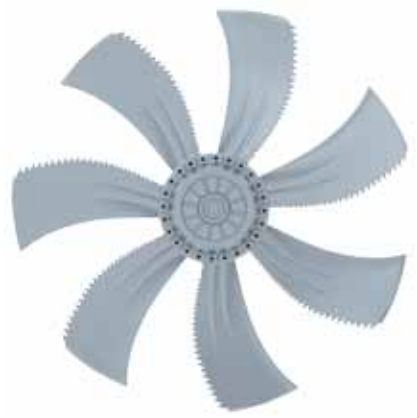

Description

Motor technology: AC
Rated voltage U_N: **3~ 400 V (Δ/Y) ±10 %***
Rated frequency f_N: **50 Hz***
Input power P_1: **2.60/1.70 kW***
Rated current I_N: **4.80/2.90 A***
Rated speed n_N: **1330/1050 min^{-1}***
Starting current I_A: 20.00 / 6.50 A
Current increase ΔI: 5 %
Thermal class: **THCL155***
Min. permitted ambient temperature $t_{R(min)}$: -40 °C
Max. permitted ambient temperature $t_{R(max)}$: 60 °C
Electrical connection: Terminal box
Number of blades: 7
Protection class: IP54
Motor protection: thermal contact
Blades: Aluminium, uncoated
Rotor: Aluminium, uncoated
Conformity: ErP 2015, CE
ErP-data
Efficiency η_{statA}: 37.9 %
Efficiency: N_{actual} = 41.7 / N_{target} = 40**
* Rated data
**ErP 2015

Characteristic curve

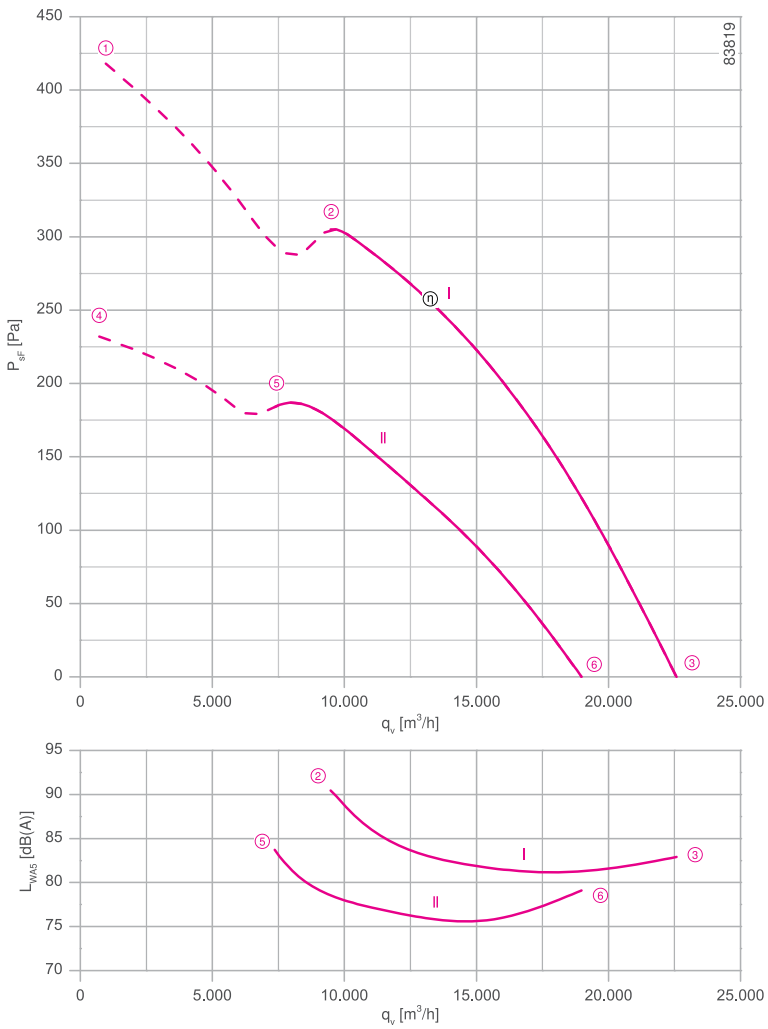

Measured in full bell mouth without guard grille in installation type A according to ISO 5801

Connection diagram Page 531
for airflow direction A 1360-108XB
for airflow direction V 1360-108XA

System components Page 430

Dimensions mm

Airflow direction A

Design D - axial bolted, suspension for full bell mouth, guard grille suction side

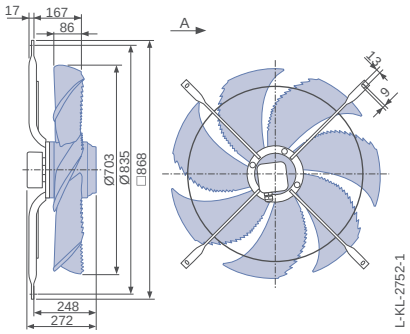

Design Q - square full bell mouth, without guard grille

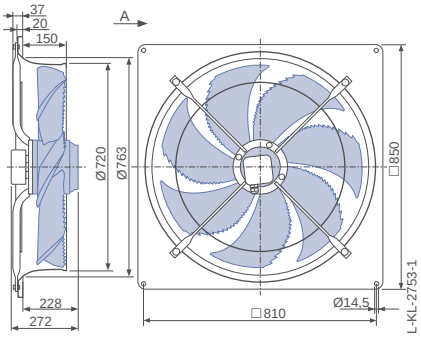

Airflow direction V

Design S - radially bolted, mounted for short bell mouth, guard grille pressure side

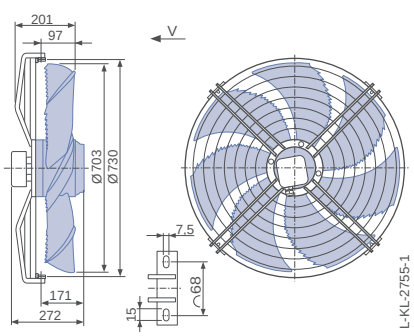

Performance data

Type	Connection	Characteristic curve	Voltage U V	Operating point	Current I A	Input power P_1 W	Speed n min^{-1}	Suction side sound power level L_{WA5} dB(A)
FN071-VD_.6N._7P2	Δ	I	400	①	5.60	3100	1290	
			400*	②	**4.80***	**2600***	**1330***	91
			400	③	3.90	1900	1390	83
	Y	II	400	④	3.20	1900	960	
			400*	⑤	**2.90***	**1700***	**1050***	84
			400	⑥	2.30	1400	1170	79

*rated data

Fan ordering information

Airflow direction A			Airflow direction V	
Design	D (guard grille suction side)	Q (without guard grille)	S (guard grille pressure side)	I (guard grille pressure side)	Q (guard grille pressure side)
		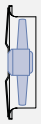			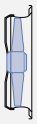
Type	**FN071-VDD.6N.A7P2**	**FN071-VDQ.6N.A7P2**	**FN071-VDS.6N.V7P2**	**FN071-VDI.6N.V7P2**	**FN071-VDQ.6N.V7P2**
Article no.	**141760**	**141761**	**141782**	**155556**	**141777**
Weight kg	25.90	36.90	28.90	29.10	39.60

Control technology

Frequency inverters Fcontrol 3~	Motor protection units 3~	Electronic voltage controllers 3~
		
Page 480	Page 518	Page 506

Design I - axial bolted, mounting for bell mouth flange, guard grille pressure side

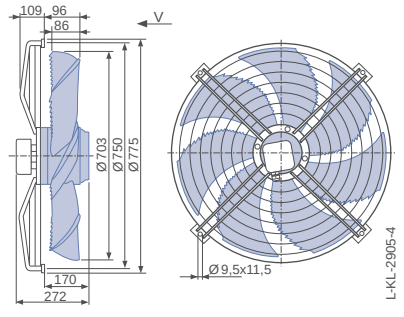

Design Q - square full bell mouth, guard grille pressure side

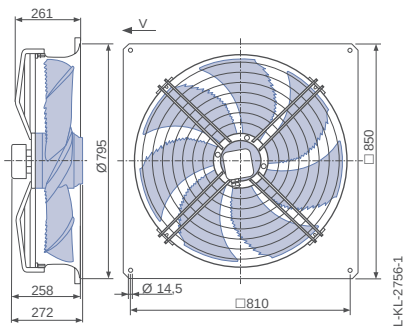

FE2owlet

for three phase alternating current, 6-6 pole

FN071-SD



Characteristic curve

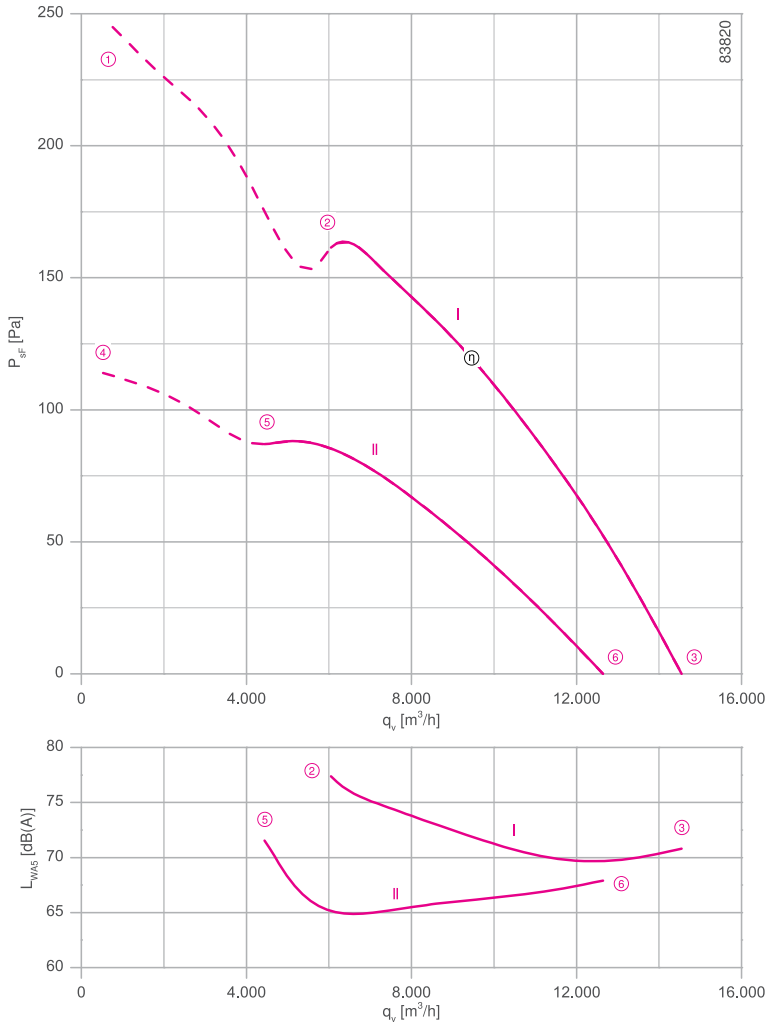

Measured in full bell mouth without guard grille in installation type A according to ISO 5801

Description

Motor technology: AC
Rated voltage U_N: **3~ 400 V (Δ/Y) ±10 %***
Rated frequency f_N: **50 Hz***
Input power P_1: **0.94/0.62 kW***
Rated current I_N: **1.70/1.05 A***
Rated speed n_N: **900/ 690 min^{-1}***
Starting current I_A: 6.00 / 1.80 A
Current increase ΔI: 10 %
Thermal class: **THCL155***
Min. permitted ambient temperature $t_{R(min)}$: -40 °C
Max. permitted ambient temperature $t_{R(max)}$: 70 °C
Electrical connection: Terminal box
Number of blades: 7
Protection class: IP54
Motor protection: thermal contact
Blades: Aluminium, uncoated
Rotor: Aluminium, uncoated
Conformity: ErP 2015, CE
ErP-data
Efficiency η_{statA}: 38.1 %
Efficiency: N_{actual} = 44.9 / N_{target} = 40**
* Rated data
**ErP 2015

Connection diagram Page 531
for airflow direction A 1360-108XB
for airflow direction V 1360-108XA

System components Page 430

Dimensions mm

Airflow direction A

Design D - axial bolted, suspension for full bell mouth, guard grille suction side

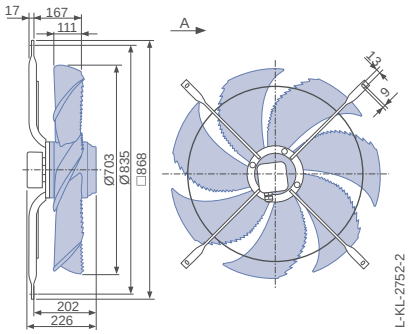

Design Q - square full bell mouth, without guard grille

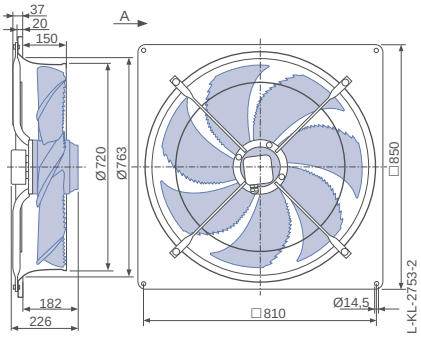

Airflow direction V

Design S - radially bolted, mounted for short bell mouth, guard grille pressure side

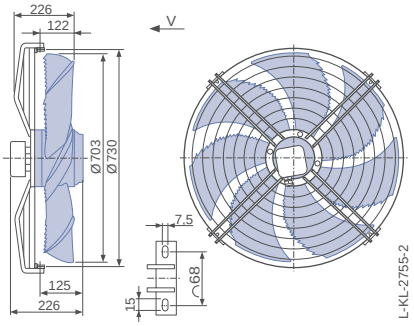

Performance data

Type	Connection	Characteristic curve	Voltage U V	Operating point	Current I A	Input power P_1 W	Speed n min^{-1}	Suction side sound power level L_{WA5} dB(A)
FN071-SD_.6F._7P1	Δ	I	400	①	2.10	1200	850	
			400*	②	**1.70***	**940***	**900***	78
			400	③	1.25	560	940	71
	Y	II	400	④	1.25	700	580	
			400*	⑤	**1.05***	**620***	**690***	69
			400	⑥	0.77	450	820	68

*rated data

Fan ordering information

Airflow direction A | **Airflow direction V**

Design	D (guard grille suction side)	Q (without guard grille)	S (guard grille pressure side)	I (guard grille pressure side)	Q (guard grille pressure side)
		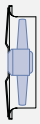			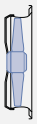
Type	**FN071-SDD.6F.A7P1**	**FN071-SDQ.6F.A7P1**	**FN071-SDS.6F.V7P1**	**FN071-SDI.6F.V7P1**	**FN071-SDQ.6F.V7P1**
Article no.	**141748**	**141749**	**141783**	**153791**	**141778**
Weight kg	20.50	31.50	23.40	23.40	34.30

Control technology

Frequency inverters Fcontrol 3~	Motor protection units 3~	Electronic voltage controllers 3~
		
Page 480	Page 518	Page 506

Design I - axial bolted, mounting for bell mouth flange, guard grille pressure side

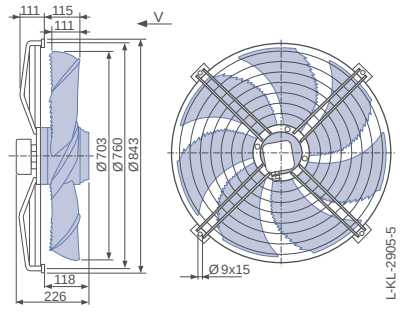

Design Q - square full bell mouth, guard grille pressure side

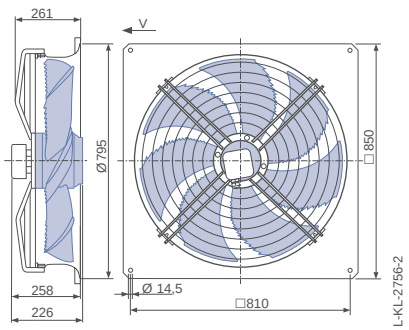

FE2owlet

for three phase alternating current, 6-6 pole

FN071-SD



Characteristic curve

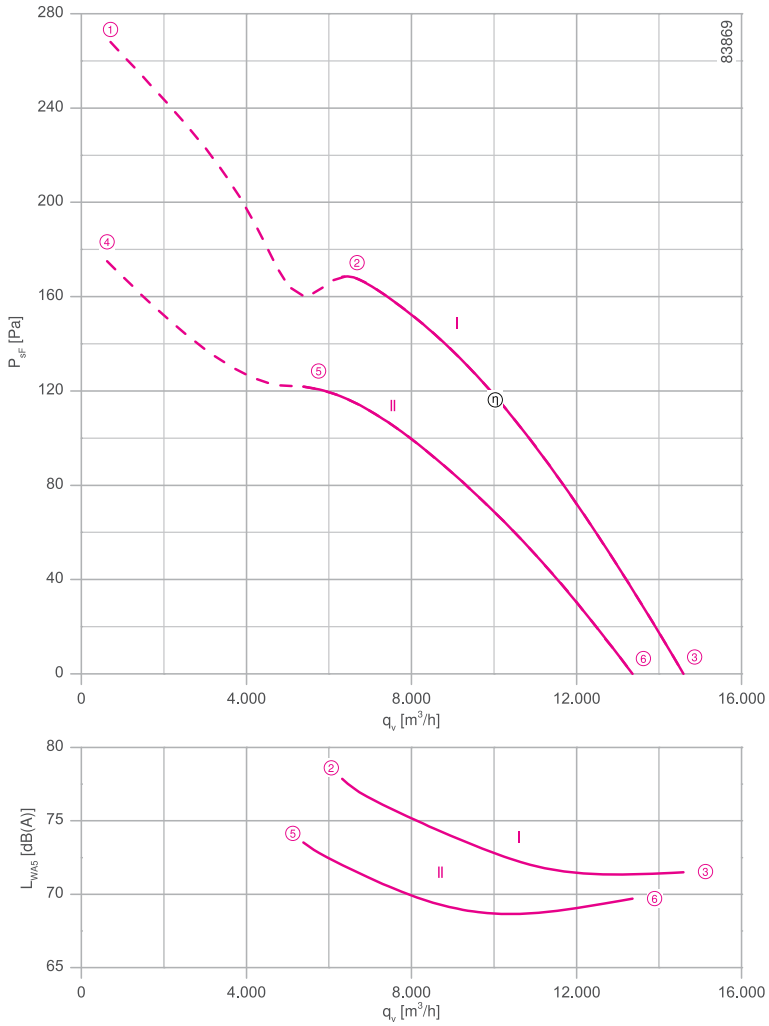

Measured in full bell mouth without guard grille in installation type A according to ISO 5801

Description

Motor technology: AC
Rated voltage U_N: **3~ 400 V (Δ/Y) ±10 %***
Rated frequency f_N: **50 Hz*** (60Hz data available)
Input power P_1: **1.00/0.72 kW***
Rated current I_N: **2.50/1.25 A***
Rated speed n_N: **920/ 780 min^{-1}***
Starting current I_A: 9.50 / 3.00 A
Current increase ΔI: 0 %
Thermal class: **THCL155***
Min. permitted ambient temperature $t_{R(min)}$: -40 °C
Max. permitted ambient temperature $t_{R(max)}$: 70 °C
Electrical connection: Terminal box
Number of blades: 7
Protection class: IP54
Motor protection: thermal contact
Blades: Aluminium, uncoated
Rotor: Aluminium, uncoated
Conformity: ErP 2015, CE
ErP-data
Efficiency η_{statA}: 37.4 %
Efficiency: N_{actual} = 44.0 / N_{target} = 40**
* Rated data
**ErP 2015

Connection diagram Page 531
for airflow direction A 1360-108XB
for airflow direction V 1360-108XA

System components Page 430

Dimensions mm

Airflow direction A

Design D - axial bolted, suspension for full bell mouth, guard grille suction side

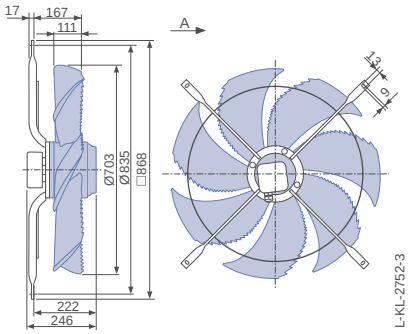

Design Q - square full bell mouth, without guard grille

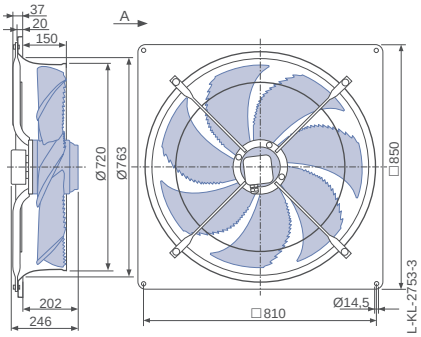

Airflow direction V

Design S - radially bolted, mounted for short bell mouth, guard grille pressure side

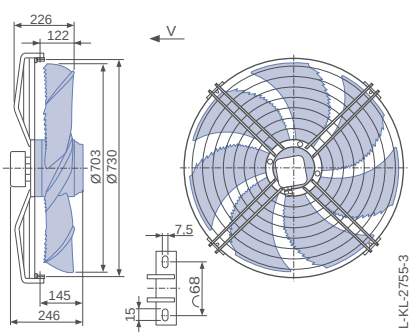

Performance data

Type	Connection	Characteristic curve	Voltage U V	Operating point	Current I A	Input power P_1 W	Speed n min^{-1}	Suction side sound power level L_{WA5} dB(A)
FN071-SD_.6K._7P1	Δ	I	400	①	2.70	1300	880	
			400*	②	**2.50***	**1000***	**920***	78
			400	③	2.20	640	950	72
	Y	II	400	④	1.45	860	710	
			400*	⑤	**1.25***	**700***	**780***	74
			400	⑥	0.92	460	870	70

*rated data

Fan ordering information

Airflow direction A | **Airflow direction V**

Design	D (guard grille suction side)	Q (without guard grille)	S (guard grille pressure side)	I (guard grille pressure side)	Q (guard grille pressure side)
		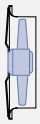			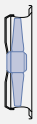
Type	**FN071-SDD.6K.A7P1**	**FN071-SDQ.6K.A7P1**	**FN071-SDS.6K.V7P1**	**FN071-SDI.6K.V7P1**	**FN071-SDQ.6K.V7P1**
Article no.	**141751**	**141752**	**141784**	**156935**	**141779**
Weight kg	24.10	35.10	27.00	27.20	37.90

Control technology

Frequency inverters Fcontrol 3~	Motor protection units 3~	Electronic voltage controllers 3~
		
Page 480	Page 518	Page 506

Design I - axial bolted, mounting for bell mouth flange, guard grille pressure side

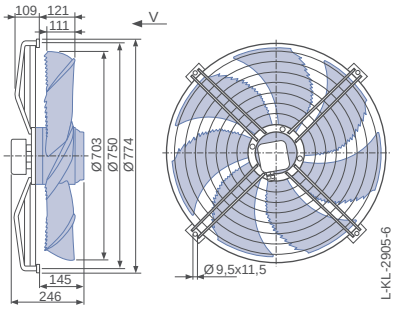

Design Q - square full bell mouth, guard grille pressure side

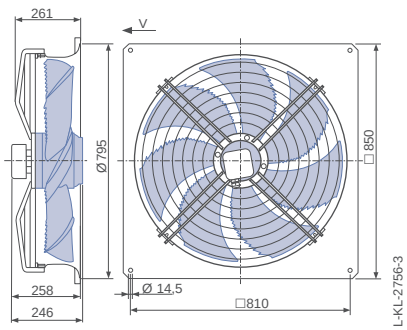

FE2owlet

for three phase alternating current, 8-8 pole

FN071-AD



Characteristic curve

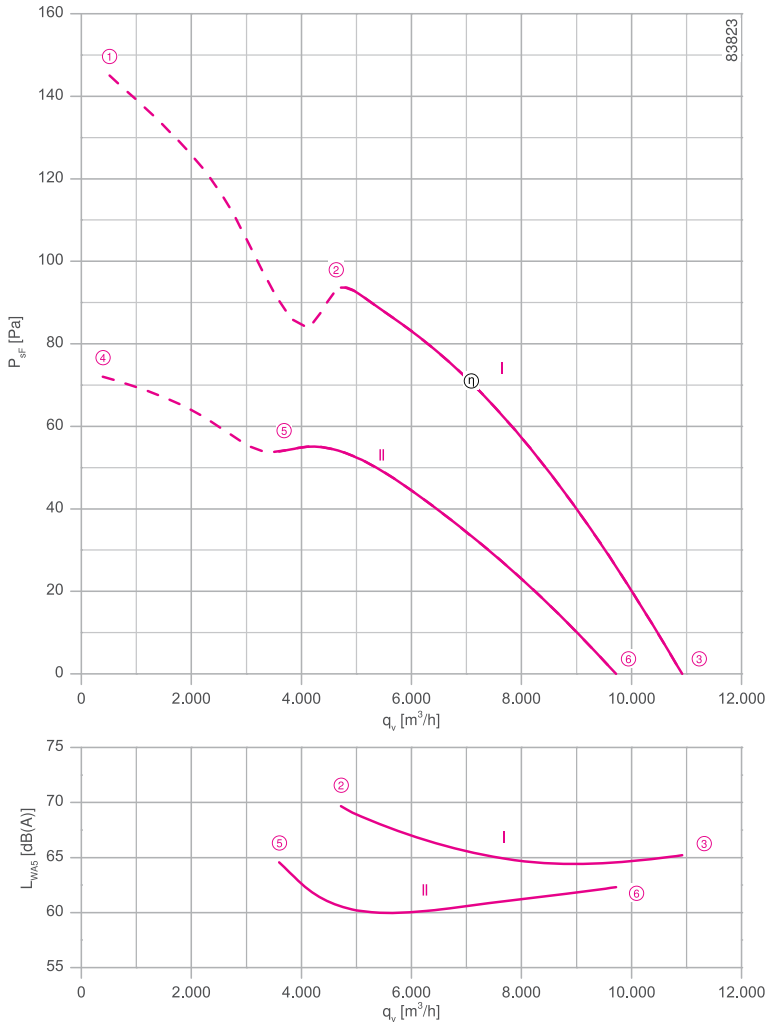

Measured in full bell mouth without guard grille in installation type A according to ISO 5801

Description

Motor technology: AC
Rated voltage U_N: **3~ 400 V (Δ/Y) ±10 %***
Rated frequency f_N: **50 Hz*** (60Hz data available)
Input power P_1: **0.46/0.31 kW***
Rated current I_N: **1.10/0.60 A***
Rated speed n_N: **680/540 min^{-1}***
Starting current I_A: 3.20 / 0.95 A
Current increase ΔI: 0 %
Thermal class: **THCL155***
Min. permitted ambient temperature $t_{R(min)}$: -40 °C
Max. permitted ambient temperature $t_{R(max)}$: 70 °C
Electrical connection: Terminal box
Number of blades: 7
Protection class: IP54
Motor protection: thermal contact
Blades: Aluminium, uncoated
Rotor: Aluminium, uncoated
Conformity: ErP 2015, CE
ErP-data
Efficiency η_{statA}: 33.4 %
Efficiency: N_{actual} = 42.1 / N_{target} = 40**
* Rated data
**ErP 2015

Connection diagram Page 531
for airflow direction A 1360-108XB
for airflow direction V 1360-108XA

System components Page 430

Dimensions mm

Airflow direction A

Design D - axial bolted, suspension for full bell mouth, guard grille suction side

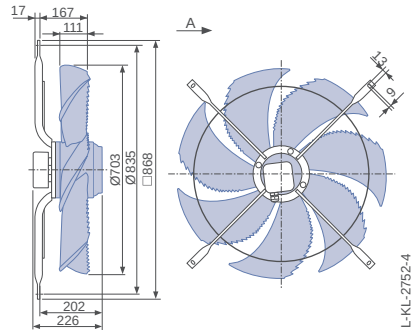

Design Q - square full bell mouth, without guard grille

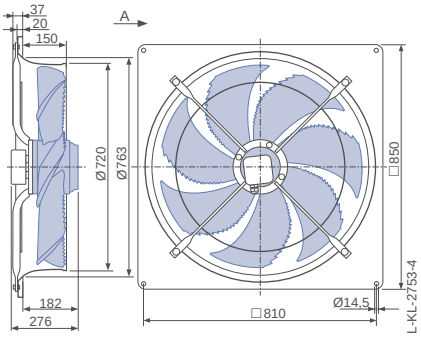

Airflow direction V

Design S - radially bolted, mounted for short bell mouth, guard grille pressure side

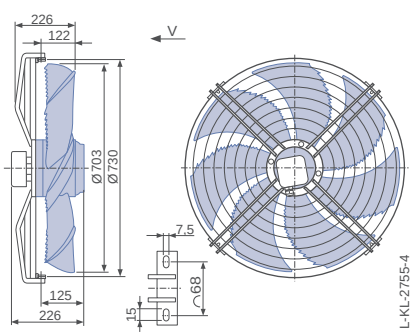

Performance data

Type	Connection	Characteristic curve	Voltage U V	Operating point	Current I A	Input power P_1 W	Speed n min^{-1}	Suction side sound power level L_{WA5} dB(A)
FN071-AD_.6F._7P1	Δ	I	400	①	1.25	580	650	
			400*	②	**1.10***	**460***	**680***	70
			400	③	0.96	300	710	65
	Y	II	400	④	0.70	350	460	
			400*	⑤	**0.60***	**310***	**540***	65
			400	⑥	0.44	210	640	62

*rated data

Fan ordering information

Airflow direction A | **Airflow direction V**

Design	D (guard grille suction side)	Q (without guard grille)	S (guard grille pressure side)	I (guard grille pressure side)	Q (guard grille pressure side)
		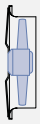			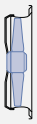
Type	**FN071-ADD.6F.A7P1**	**FN071-ADQ.6F.A7P1**	**FN071-ADS.6F.V7P1**	**FN071-ADI.6F.V7P1**	**FN071-ADQ.6F.V7P1**
Article no.	**141754**	**141755**	**141785**	**141800**	**141780**
Weight kg	20.50	31.50	23.40	23.10	34.30

Control technology

Frequency inverters Fcontrol 3~	Motor protection units 3~	Electronic voltage controllers 3~
		
Page 480	Page 518	Page 506

Design I - axial bolted, mounting for bell mouth flange, guard grille pressure side

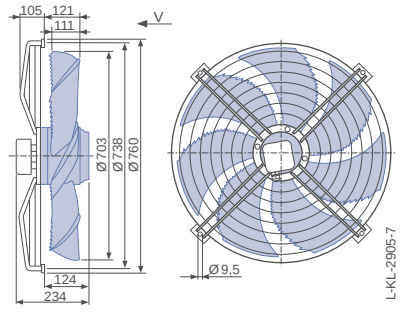

Design Q - square full bell mouth, guard grille pressure side

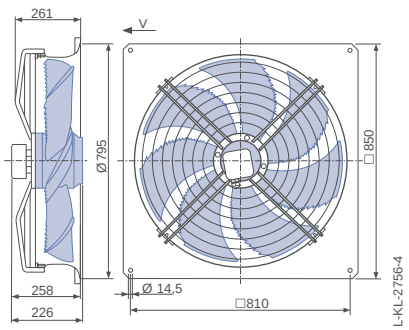

FE2owlet

for three phase alternating current, 12-12 pole

FN071-ND

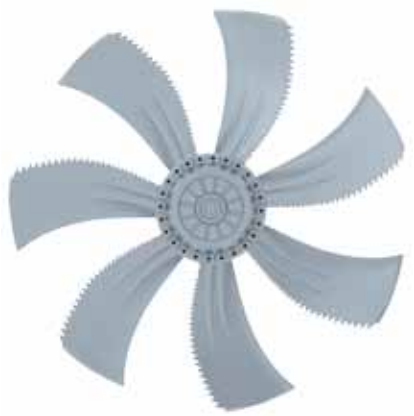

Description

Motor technology: AC
Rated voltage U_N: **3~ 400 V (Δ/Y) ±10 %***
Rated frequency f_N: **50 Hz***
Input power P_1: **140/85 W***
Rated current I_N: **0.37/0.175 A***
Rated speed n_N: **440/ 350 min^{-1}***
Current increase ΔI: 0 %
Thermal class: **THCL155***
Min. permitted ambient temperature $t_{R(min)}$: -40 °C
Max. permitted ambient temperature $t_{R(max)}$: 70 °C
Electrical connection: Terminal box
Number of blades: 7
Protection class: IP54
Motor protection: thermal contact
Blades: Aluminium, uncoated
Rotor: Aluminium, uncoated
Conformity: ErP 2015, CE
ErP-data
Efficiency η_{statA}: 28.4 %
Efficiency: N_{actual} = 40.3 / N_{target} = 40**
Frequency inverter required
* Rated data
**ErP 2015

Characteristic curve

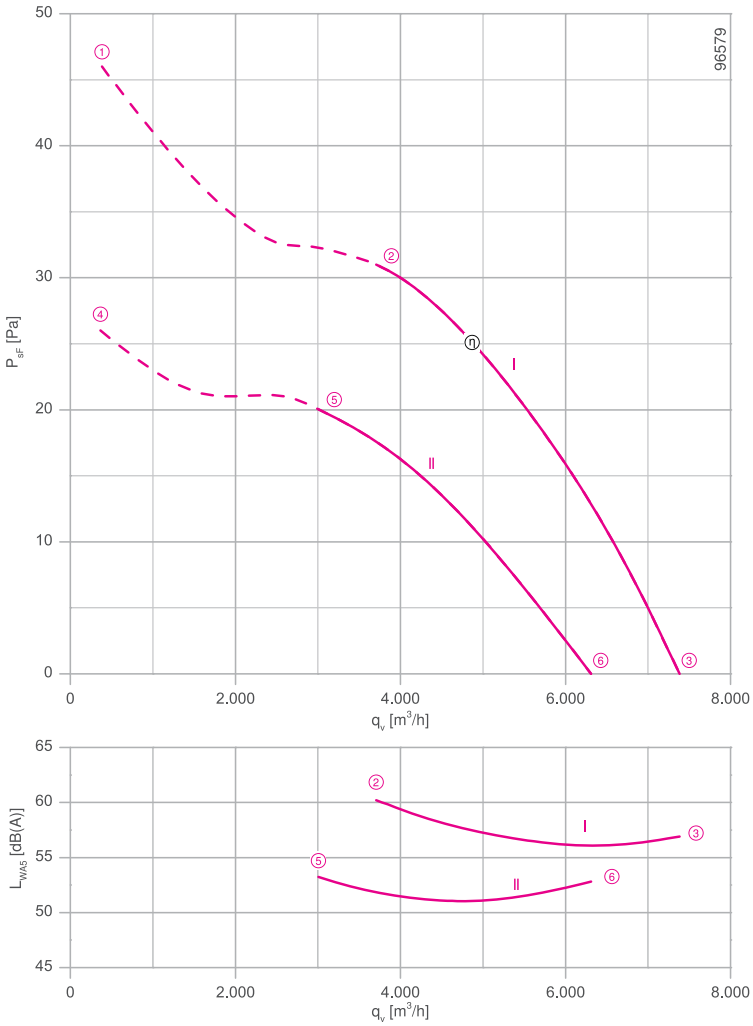

Measured in full bell mouth without guard grille in installation type A according to ISO 5801

Connection diagram Page 531
for airflow direction A 1360-108XB
for airflow direction V 1360-108XA

System components Page 430

Dimensions mm

Airflow direction A

Design D - axial bolted, suspension for full bell mouth, guard grille suction side

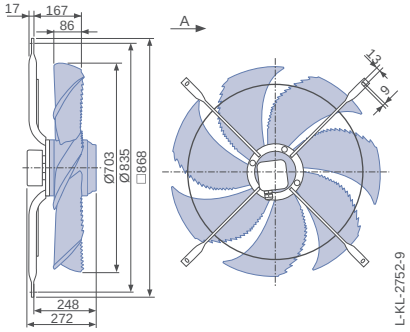

Design Q - square full bell mouth, without guard grille

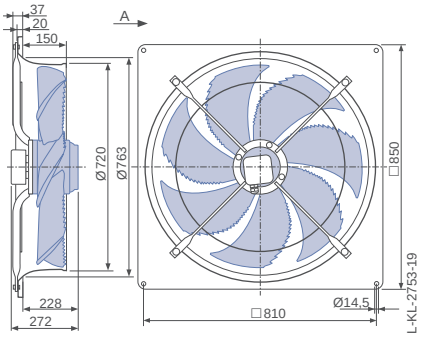

Airflow direction V

Design K - axial bolted, mounted for short bell mouth, guard grille pressure side

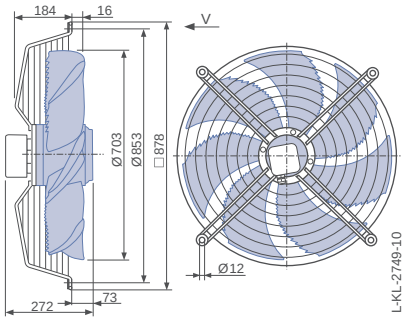

Performance data

Type	Connection	Characteristic curve	Voltage U V	Operating point	Current I A	Input power P_1 W	Speed n min^{-1}	Suction side sound power level L_{WA5} dB(A)
FN071-ND_.6N._7P2	Δ	I	400	①	0.40	160	430	
			400*	②	**0.37***	**140***	**440***	60
			400	③	0.35	110	460	57
	Y	II	400	④	0.19	95	320	
			400*	⑤	**0.17***	**85***	**350***	53
			400	⑥	0.15	70	390	53

*rated data

Fan ordering information

Airflow direction A | **Airflow direction V**

Design	D (guard grille suction side)	Q (without guard grille)	K (guard grille pressure side)	S (guard grille pressure side)	I (guard grille pressure side)	Q (guard grille pressure side)
		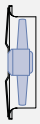				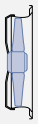
Type	**FN071-NDD.6N.A7P2**	**FN071-NDQ.6N.A7P2**	**FN071-NDK.6N.V7P2**	**FN071-NDS.6N.V7P2**	**FN071-NDI.6N.V7P2**	**FN071-NDQ.6N.V7P2**
Article no.	**160060**	**160061**	**160063**	**160065**	**160066**	**160064**
Weight kg	25.90	36.90	29.60	28.90	23.00	39.60

Control technology

Frequency inverters Fcontrol 3~	Motor protection units 3~	Electronic voltage controllers 3~
		
Page 480	Page 518	Page 506

Design S - radially bolted, mounted for short bell mouth, guard grille pressure side

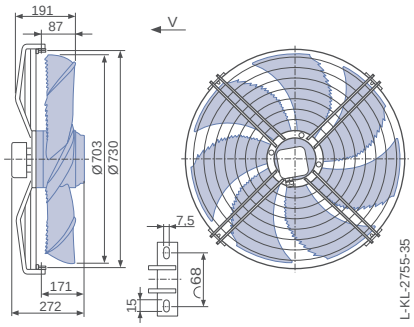

Design I - axial bolted, mounting for bell mouth flange, guard grille pressure side

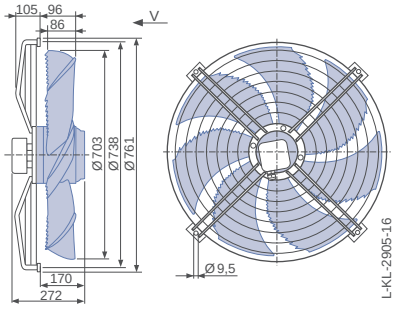

Design Q - square full bell mouth, guard grille pressure side

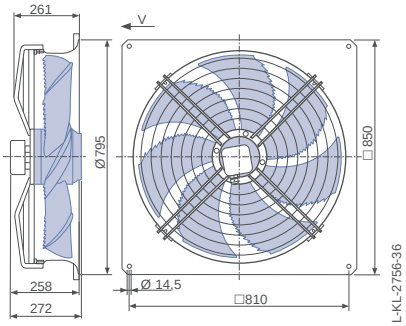

FE2owlet

for three phase alternating current, 4-4 pole

FN080-VD



Description

Motor technology: AC
Rated voltage U_N: **3~ 400 V (Δ/Y) ±10 %***
Rated frequency f_N: **50 Hz***
Input power P_1: **3.90/2.60 kW***
Rated current I_N: **6.80/4.20 A***
Rated speed n_N: **1310/1050 min^{-1}***
Starting current I_A: 32.00 / 10.00 A
Current increase ΔI: 5 %
Thermal class: **THCL155***
Min. permitted ambient temperature $t_{R(min)}$: -40 °C
Max. permitted ambient temperature $t_{R(max)}$: 70 °C
Electrical connection: Terminal box
Number of blades: 5
Protection class: IP54
Motor protection: thermal contact
Blades: Aluminium, uncoated
Rotor: Aluminium, uncoated
Conformity: ErP 2015, CE
ErP-data
Efficiency η_{statA}: 40.4 %
Efficiency: N_{actual} = 43.2 / N_{target} = 40**
* Rated data
**ErP 2015

Characteristic curve

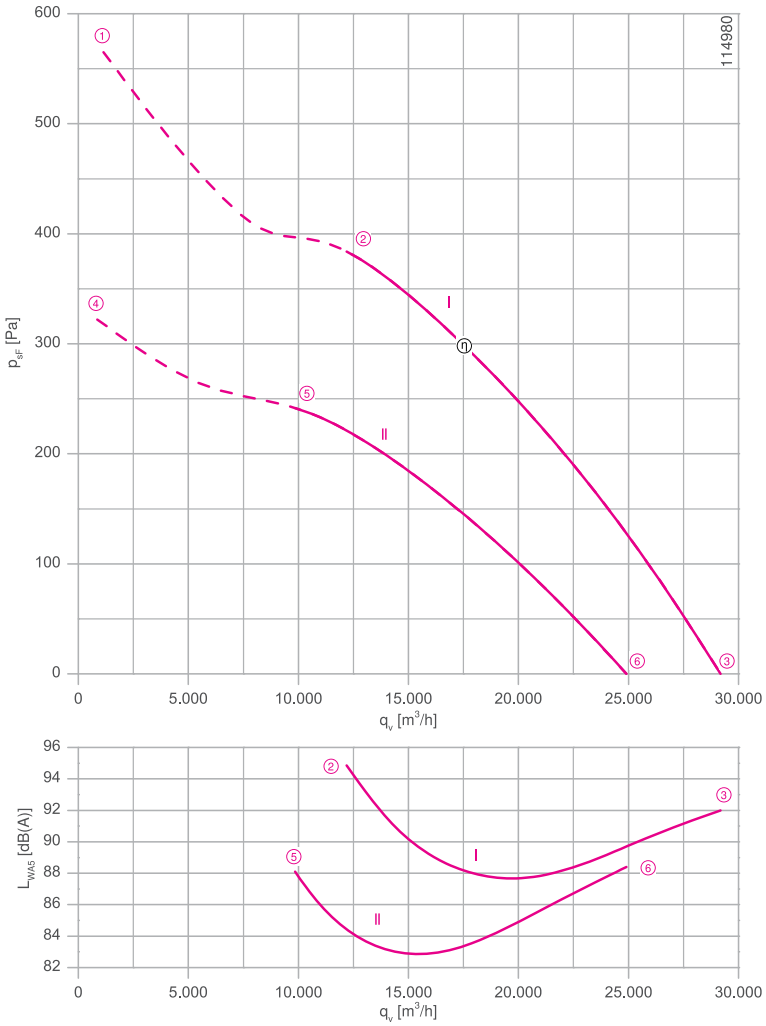

Measured in full bell mouth without guard grille in installation type A according to ISO 5801

Connection diagram Page 531
for airflow direction A 1360-108XB
for airflow direction V 1360-108XA

System components Page 430

Dimensions mm

Airflow direction A

Design Q - square full bell mouth, guard grille suction side

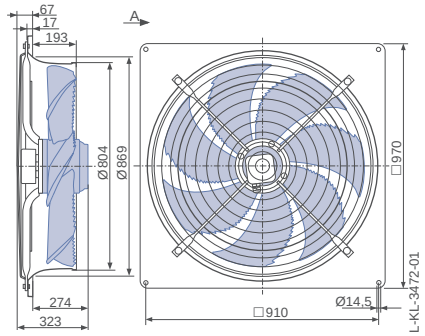

Airflow direction V

Design S - radially bolted, mounted for short bell mouth, guard grille pressure side

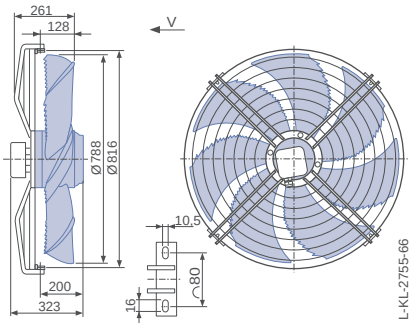

Design Q - square full bell mouth, guard grille pressure side

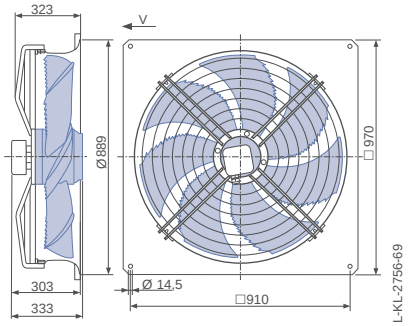

Performance data

Type	Connection	Characteristic curve	Voltage U V	Operating point	Current I A	Input power P_1 W	Speed n min^{-1}	Suction side sound power level L_{WA5} dB(A)
FN080-VD_.7Q._5P7	Δ	I	400	①	8.40	5000	1240	
			400*	②	**6.80***	**3900***	**1310***	95
			400	③	5.20	2700	1380	92
	Y	II	400	④	5.00	3000	930	
			400*	⑤	**4.20***	**2600***	**1050***	88
			400	⑥	3.20	2000	1180	88

*rated data

Fan ordering information

Airflow direction A		Airflow direction V	
Design	Q (guard grille suction side)	S (guard grille pressure side)	Q (guard grille pressure side)
	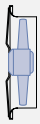		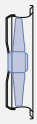
Type **Article no.**	**FN080-VDQ.7Q.A5P7** **171318**	**FN080-VDS.7Q.V5P7** **171315**	**FN080-VDQ.7Q.V5P7** **171314**
Weight kg	65.60	50.90	65.20

Control technology

Frequency inverters Fcontrol 3~	Motor protection units 3~	Electronic voltage controllers 3~
		
Page 480	Page 518	Page 506

FE2owlet

for three phase alternating current, 6-6 pole

FN080-SD



Description

Motor technology: AC
Rated voltage U_N: **3~ 400 V (Δ/Y) ±10 %***
Rated frequency f_N: **50 Hz***
Motor input power P_1: **1.80/1.15 kW***
Rated current I_N: **3.90/2.20 A***
Rated speed n_N: **900/ 700 min^{-1}***
Starting current I_A: 13.00 A / 3.80 A
Current increase ΔI: 5 %
Thermal class: **THCL155***
Min. permitted conveyor temperature $t_{R(min)}$: -40 °C
Max. permitted conveyor temperature $t_{R(max)}$: 65 °C
Electrical connection: Terminal box
Number of blades: 7
Protection class: IP54
Motor protection: Thermal contact
Blades: Aluminium, uncoated
Rotor: Aluminium, uncoated
Conformity: ErP 2015, CE
ErP Data
Efficiency η_{statA}: 36.8 %
Efficiency: N_{actual} = 41.5 / N_{target} = 40**
* Rated data
**ErP 2015

Characteristic curve

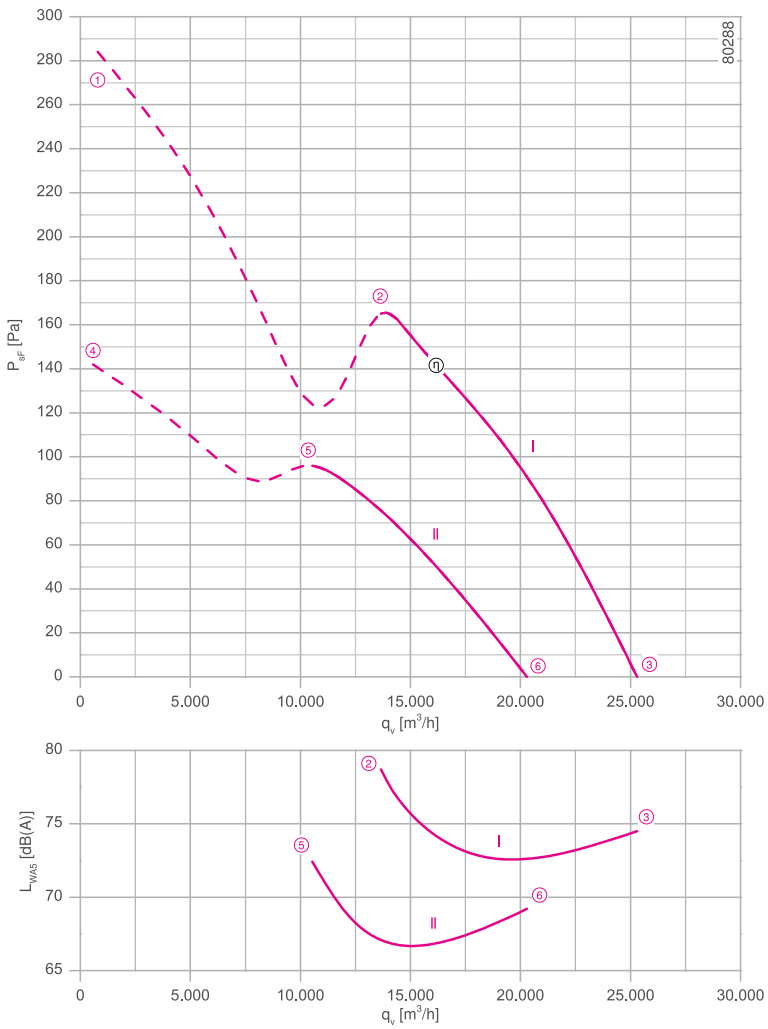

Measured in full bell mouth without guard grille in installation type A according to ISO 5801

Connection diagram Page 531
1360-108XA

System components Page 430

Dimensions mm

Airflow direction V

Design S - radially bolted, mounted for short bell mouth, guard grille pressure side

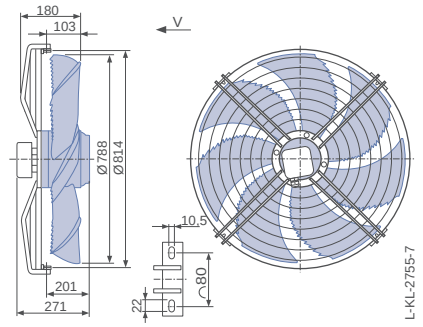

Design I - axial bolted, mounting for bell mouth flange, guard grille pressure side

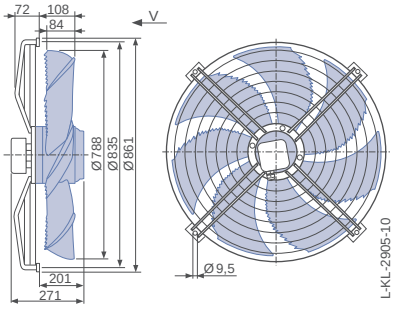

Design Q - square full bell mouth, guard grille pressure side

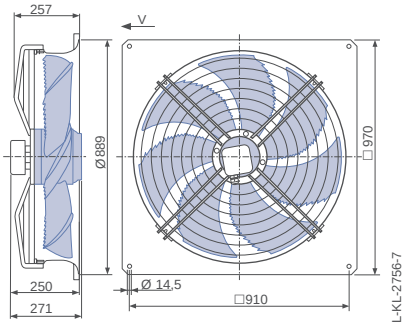

Performance data

Type	Connection	Characteristic curve	Voltage U V	Operating point	Current I A	Input power P_1 W	Speed n min^{-1}	Suction side sound power level L_{WA5} dB(A)
FN080-SD_.6N._7	Δ	I	400	①	4.80	2400	860	
			400*	②	**3.90***	**1800***	**900***	79
			400	③	3.60	1550	920	75
	Y	II	400	④	2.50	1300	600	
			400*	⑤	**2.20***	**1150***	**700***	73
			400	⑥	2.00	1050	740	69

*rated data

Fan ordering information

Airflow direction V

Design	S (guard grille pressure side)	I (guard grille pressure side)	Q (guard grille pressure side)
			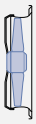
Type **Article no.**	**FN080-SDS.6N.V7** **138757**	**FN080-SDI.6N.V7** **153512**	**FN080-SDQ.6N.V7** **138758**
Weight kg	36.50	36.10	50.90

Control technology

Frequency inverters Fcontrol 3~	Motor protection units 3~	Electronic voltage controllers 3~
		
Page 480	Page 518	Page 506

FE2owlet

for three phase alternating current, 6-6 pole

FN080-SD



Description

Motor technology: AC
Rated voltage U_N: **3~ 400 V (Δ/Y) ±10 %***
Rated frequency f_N: **50 Hz***
Input power P_1: **1.90/1.10 kW***
Rated current I_N: **3.90/2.00 A***
Rated speed n_N: **870/ 630 min^{-1}***
Starting current I_A: 11.00 / 3.40 A
Current increase ΔI: 0 %
Thermal class: **THCL155***
Min. permitted ambient temperature $t_{R(min)}$: -40 °C
Max. permitted ambient temperature $t_{R(max)}$: 60 °C
Electrical connection: Terminal box
Number of blades: 7
Protection class: IP54
Motor protection: thermal contact
Blades: Aluminium, uncoated
Rotor: Aluminium, uncoated
Conformity: ErP 2015, CE
ErP-data
Efficiency η_{statA}: 36.3 %
Efficiency: N_{actual} = 41.0 / N_{target} = 40**
* Rated data
**ErP 2015

Characteristic curve

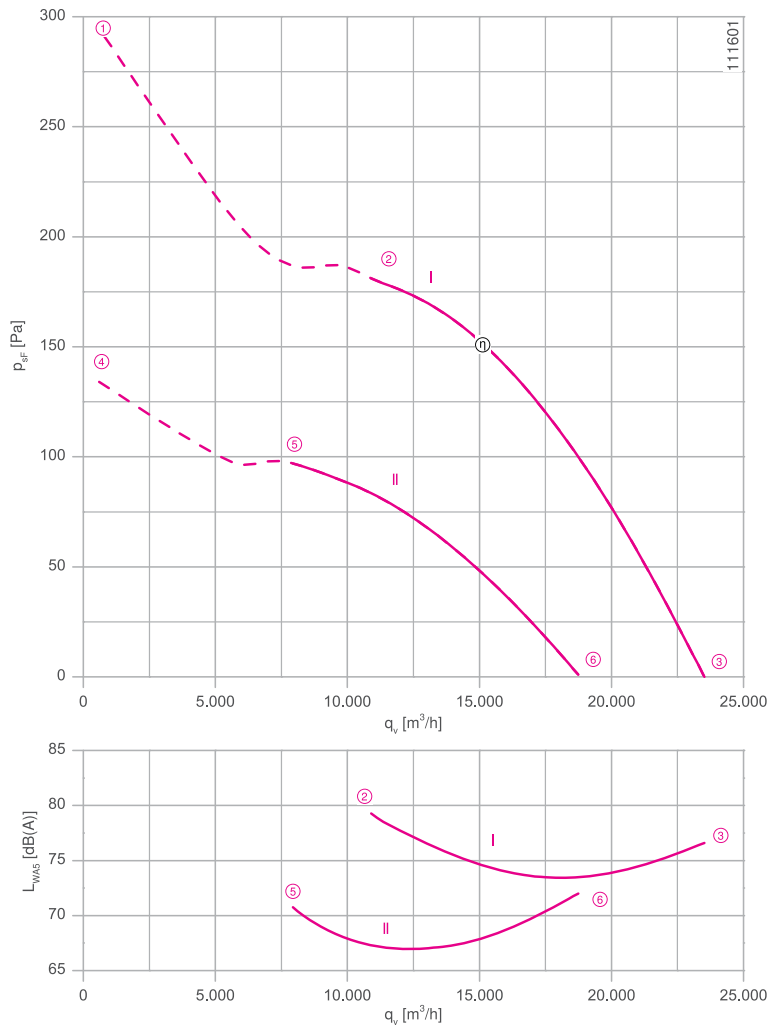

Measured in full bell mouth without guard grille in installation type A according to ISO 5801

Connection diagram Page 531
1360-108XA

System components Page 430

Dimensions mm

Airflow direction V

Design K - axial bolted, mounted for short bell mouth, guard grille pressure side

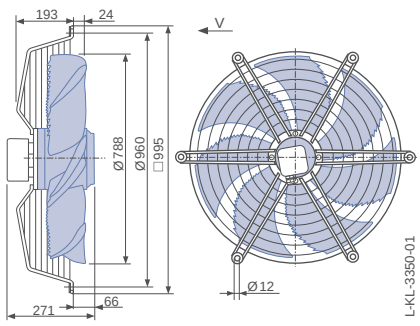

Design S - radially bolted, mounted for short bell mouth, guard grille pressure side

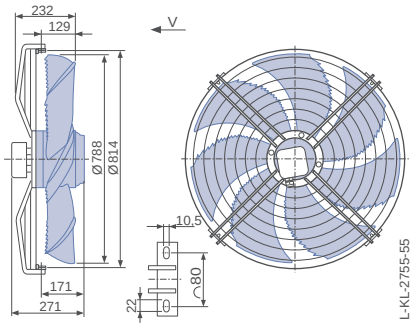

Design I - axial bolted, mounting for bell mouth flange, guard grille pressure side

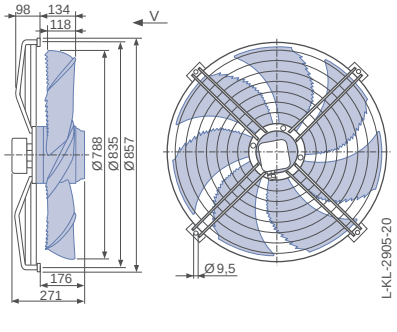

Performance data

Type	Connection	Characteristic curve	Voltage U V	Operating point	Current I A	Input power P_1 W	Speed n min^{-1}	Suction side sound power level L_{WA5} dB(A)
FN080-SD_.6N.V7P5	Δ	I	400	①	4.60	2400	810	
			400*	②	**3.90***	**1900***	**870***	80
			400	③	3.10	1350	920	77
	Y	II	400	④	2.20	1200	550	
			400*	⑤	**2.00***	**1100***	**630***	71
			400	⑥	1.70	900	740	72

*rated data

Fan ordering information

Airflow direction V

Design	K (guard grille pressure side)	S (guard grille pressure side)	I (guard grille pressure side)	F (without guard grille)	Q (guard grille pressure side)
				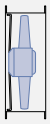	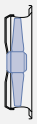
Type **Article no.**	**FN080-SDK.6N.V7P5** **168788**	**FN080-SDS.6N.V7P5** **168787**	**FN080-SDI.6N.V7P5** **168785**	**FN080-SDF.6N.V7P5** **168789**	**FN080-SDQ.6N.V7P5** **168786**
Weight kg	37.90	33.70	33.60	45.80	42.60

Control technology

Frequency inverters Fcontrol 3~	Motor protection units 3~	Electronic voltage controllers 3~
		
Page 480	Page 518	Page 506

Design F - flange ring with two flanges, without guard grille

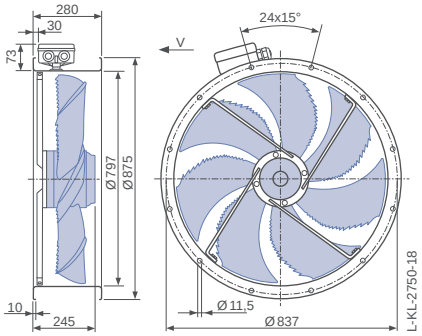

Design Q - square full bell mouth, guard grille pressure side

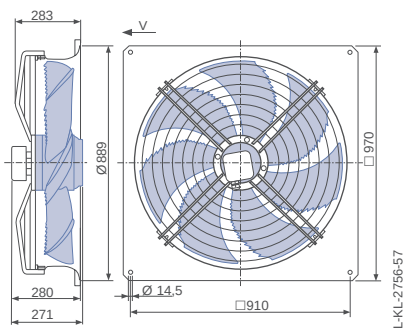

FE2owlet

for three phase alternating current, 6-6 pole

FN080-SD



Description

Motor technology: AC
Rated voltage U_N: **3~ 400 V (Δ/Y) ±10 %***
Rated frequency f_N: **50 Hz*** (60Hz data available)
Input power P_1: **1.65/0.82 kW***
Rated current I_N: **3.50/1.60 A***
Rated speed n_N: **790/ 560 min^{-1}***
Starting current I_A: 9.50 / 3.00 A
Current increase ΔI: 0 %
Thermal class: **THCL155***
Min. permitted ambient temperature $t_{R(min)}$: -40 °C
Max. permitted ambient temperature $t_{R(max)}$: 70 °C
Electrical connection: Terminal box
Number of blades: 7
Protection class: IP54
Motor protection: thermal contact
Blades: Aluminium, uncoated
Rotor: Aluminium, uncoated
Conformity: ErP 2015, CE
ErP-data
Efficiency η_{statA}: 35.1 %
Efficiency: N_{actual} = 40.2 / N_{target} = 40**
* Rated data
**ErP 2015

Characteristic curve

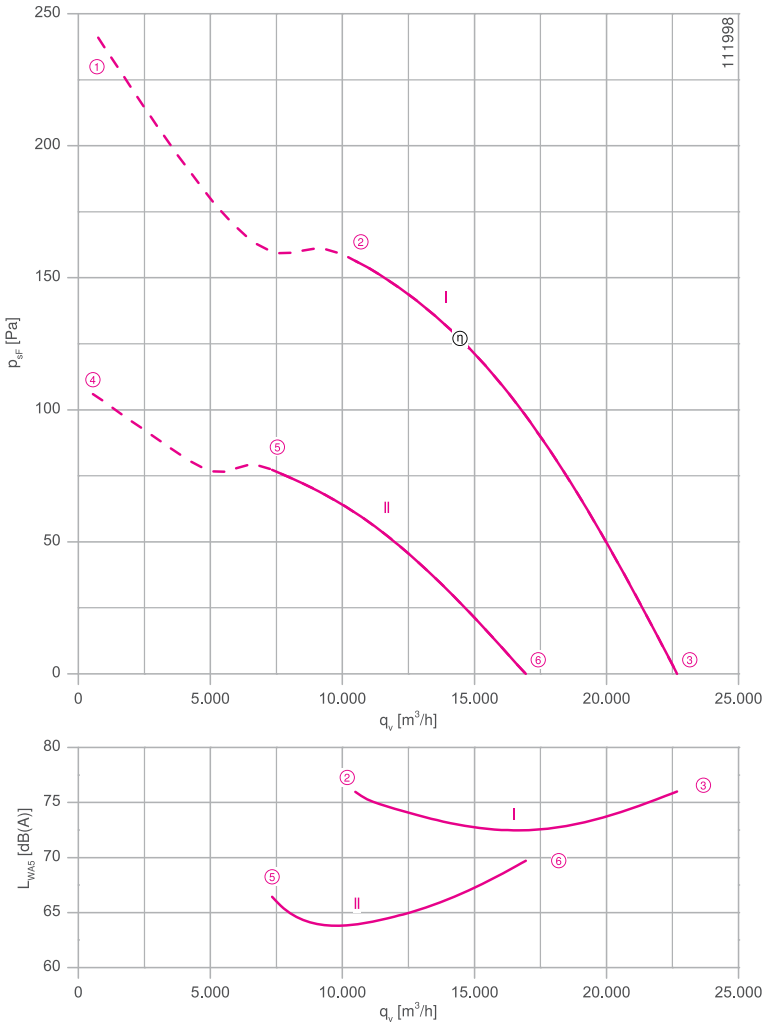

Measured in full bell mouth without guard grille in installation type A according to ISO 5801.

Connection diagram Page 531
1360-108XA

System components Page 430

Dimensions mm

Airflow direction V

Design K - axial bolted, mounted for short bell mouth, guard grille pressure side

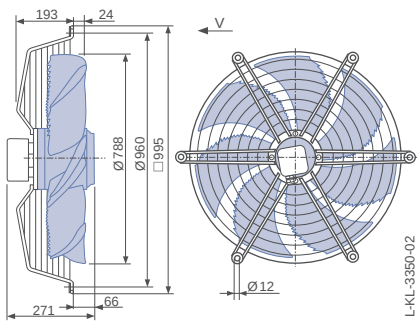

Design S - radially bolted, mounted for short bell mouth, guard grille pressure side

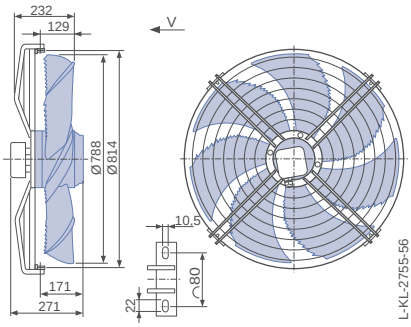

Design I - axial bolted, mounting for bell mouth flange, guard grille pressure side

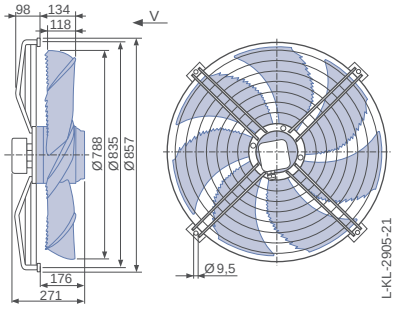

Performance data

Type	Connection	Characteristic curve	Voltage U V	Operating point	Current I A	Input power P_1 W	Speed n min^{-1}	Suction side sound power level L_{WA5} dB(A)
FN080-SD_.6N.V7P5	Δ	I	400	①	4.00	1950	730	
			400*	②	**3.50***	**1650***	**790***	76
			400	③	3.00	1250	860	76
	Y	II	400	④	1.70	880	490	
			400*	⑤	**1.55***	**820***	**560***	67
			400	⑥	1.40	720	650	70

*rated data

Fan ordering information

Airflow direction V

Design	K (guard grille pressure side)	S (guard grille pressure side)	I (guard grille pressure side)	F (without guard grille)	Q (guard grille pressure side)
				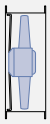	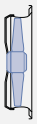
Type **Article no.**	**FN080-SDK.6N.V7P5** **168893**	**FN080-SDS.6N.V7P5** **168892**	**FN080-SDI.6N.V7P5** **168890**	**FN080-SDF.6N.V7P5** **168894**	**FN080-SDQ.6N.V7P5** **168891**
Weight kg	37.90	33.00	33.60	45.80	42.60

Control technology

Frequency inverters Fcontrol 3~	Motor protection units 3~	Electronic voltage controllers 3~
		
Page 480	Page 518	Page 506

Design F - flange ring with two flanges, without guard grille

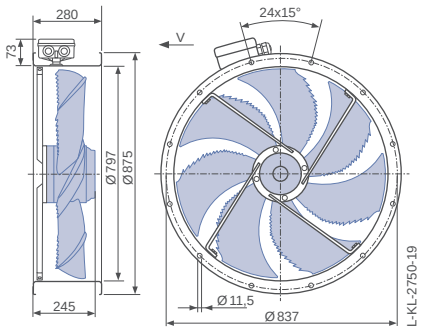

Design Q - square full bell mouth, guard grille pressure side

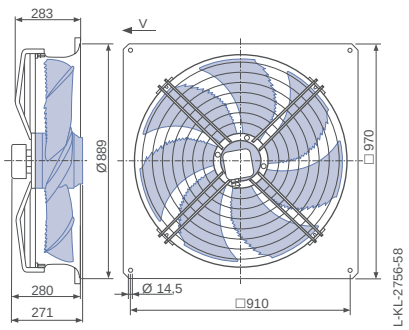

FE2owlet

for three phase alternating current, 8-8 pole

FN080-AD



Description

Motor technology: AC
Rated voltage U_N: **3~ 400 V (Δ/Y) ±10 %***
Rated frequency f_N: **50 Hz*** (60Hz data available)
Input power P_1: **0.82/0.48 kW***
Rated current I_N: **2.10/1.00 A***
Rated speed n_N: **670/550 min^{-1}***
Starting current I_A: 5.50 / 1.60 A
Current increase ΔI: 0 %
Thermal class: **THCL155***
Min. permitted ambient temperature $t_{R(min)}$: -40 °C
Max. permitted ambient temperature $t_{R(max)}$: 70 °C
Electrical connection: Terminal box
Number of blades: 7
Protection class: IP54
Motor protection: thermal contact
Blades: Aluminium, uncoated
Rotor: Aluminium, uncoated
Conformity: ErP 2015, CE
ErP-data
Efficiency η_{statA}: 33.4 %
Efficiency: N_{actual} = 40.3 / N_{target} = 40**
* Rated data
**ErP 2015

Characteristic curve

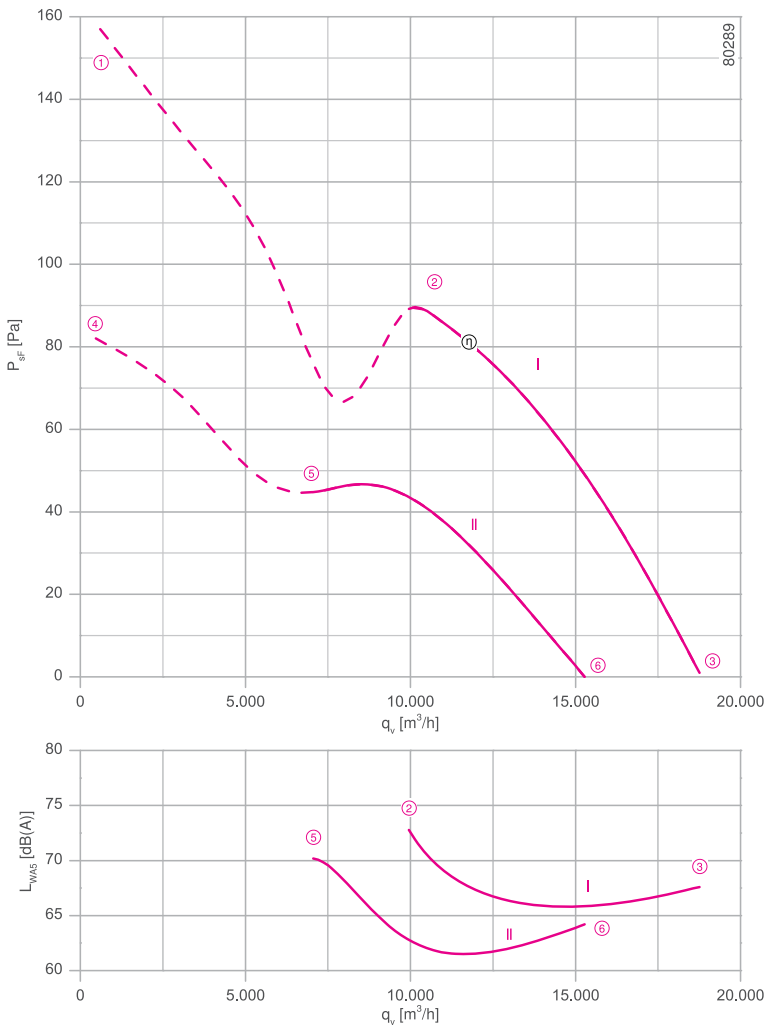

Measured in full bell mouth without guard grille in installation type A according to ISO 5801

Connection diagram Page 531
1360-108XA

System components Page 430

Dimensions mm

Airflow direction V

Design S - radially bolted, mounted for short bell mouth, guard grille pressure side

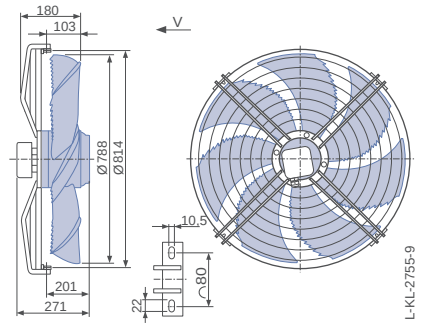

Design I - axial bolted, mounting for bell mouth flange, guard grille pressure side

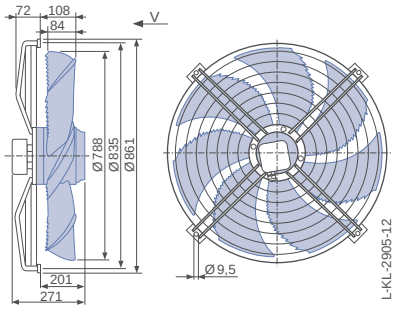

Design Q - square full bell mouth, guard grille pressure side

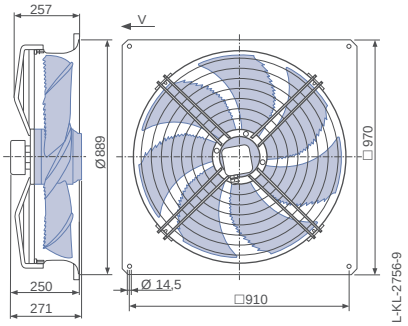

Performance data

Type	Connection	Characteristic curve	Voltage U V	Operating point	Current I A	Input power P_1 W	Speed n min^{-1}	Suction side sound power level L_{WA5} dB(A)
FN080-AD_.6N._7	Δ	I	400	①	2.40	1050	640	
			400*	②	**2.10***	**820***	**670***	73
			400	③	2.00	700	690	68
	Y	II	400	④	1.20	580	460	
			400*	⑤	**1.00***	**480***	**550***	70
			400	⑥	0.98	460	560	64

*rated data

Fan ordering information

Airflow direction V

Design	S (guard grille pressure side)	I (guard grille pressure side)	Q (guard grille pressure side)
			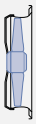
Type **Article no.**	**FN080-ADS.6N.V7** **138763**	**FN080-ADI.6N.V7** **153397**	**FN080-ADQ.6N.V7** **138764**
Weight kg	36.50	36.10	50.90

Control technology

Frequency inverters Fcontrol 3~	Motor protection units 3~	Electronic voltage controllers 3~
		
Page 480	Page 518	Page 506

FE2owlet

for three phase alternating current, 8-8 pole

FN080-AD



Description

Motor technology: AC
Rated voltage U_N: **3~ 400 V (Δ/Y) ±10 %***
Rated frequency f_N: **50 Hz*** (60Hz data available)
Input power P_1: **0.84/0.46 kW***
Rated current I_N: **2.20/1.00 A***
Rated speed n_N: **650/ 480 min^{-1}***
Starting current I_A: 5.50 / 1.60 A
Current increase ΔI: 0 %
Thermal class: **THCL155***
Min. permitted ambient temperature $t_{R(min)}$: -40 °C
Max. permitted ambient temperature $t_{R(max)}$: 70 °C
Electrical connection: Terminal box
Number of blades: 7
Protection class: IP54
Motor protection: thermal contact
Blades: Aluminium, uncoated
Rotor: Aluminium, uncoated
Conformity: ErP 2015, CE
ErP-data
Efficiency η_{statA}: 33.1 %
Efficiency: N_{actual} = 40.1 / N_{target} = 40**
* Rated data
**ErP 2015

Characteristic curve

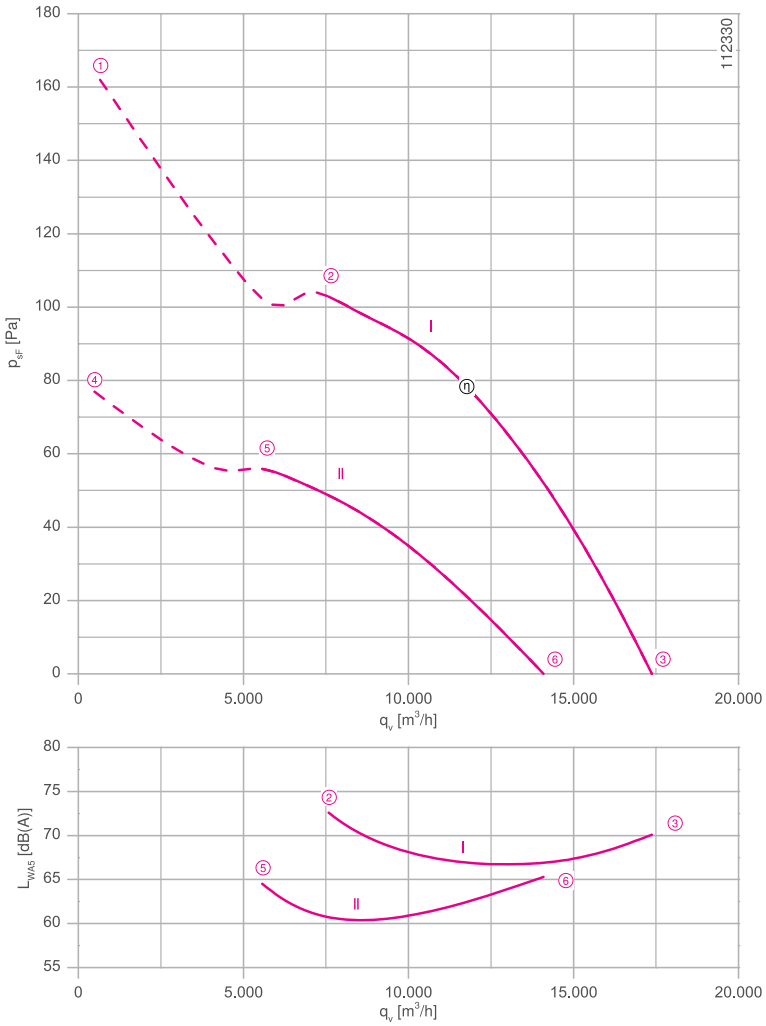

Measured in full bell mouth without guard grille in installation type A according to ISO 5801

Connection diagram Page 531
1360-108XA

System components Page 430

Dimensions mm

Airflow direction V

Design K - axial bolted, mounted for short bell mouth, guard grille pressure side

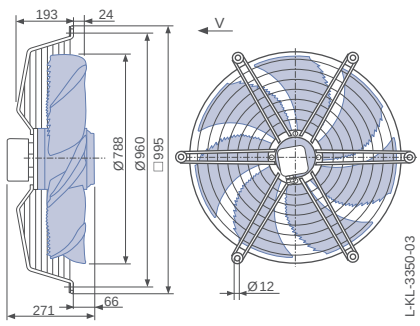

Design S - radially bolted, mounted for short bell mouth, guard grille pressure side

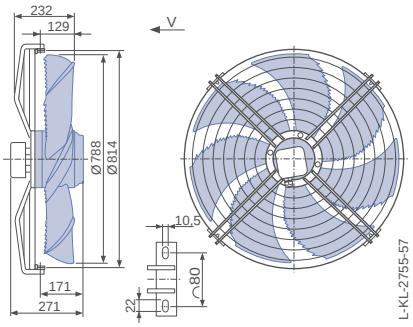

Design I - axial bolted, mounting for bell mouth flange, guard grille pressure side

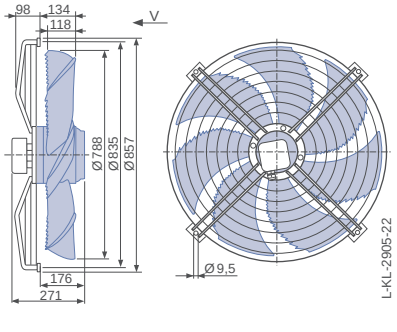

Performance data

Type	Connection	Characteristic curve	Voltage U V	Operating point	Current I A	Input power P_1 W	Speed n min^{-1}	Suction side sound power level L_{WA5} dB(A)
FN080-AD_.6N.V7P5	Δ	I	400	①	2.50	1050	610	
			400*	②	**2.20***	**840***	**650***	73
			400	③	1.90	620	690	70
	Y	II	400	④	1.10	520	420	
			400*	⑤	**1.00***	**460***	**480***	65
			400	⑥	0.88	400	550	65

*rated data

Fan ordering information

Airflow direction V

Design	K (guard grille pressure side)	S (guard grille pressure side)	I (guard grille pressure side)	F (without guard grille)	Q (guard grille pressure side)
				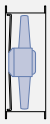	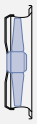
Type **Article no.**	**FN080-ADK.6N.V7P5** **168901**	**FN080-ADS.6N.V7P5** **168900**	**FN080-ADI.6N.V7P5** **168898**	**FN080-ADF.6N.V7P5** **168902**	**FN080-ADQ.6N.V7P5** **168899**
Weight kg	37.90	33.00	33.60	45.80	42.60

Control technology

Frequency inverters Fcontrol 3~	Motor protection units 3~	Electronic voltage controllers 3~
		
Page 480	Page 518	Page 506

Design F - flange ring with two flanges, without guard grille

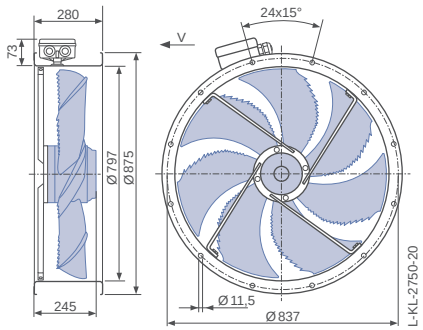

Design Q - square full bell mouth, guard grille pressure side

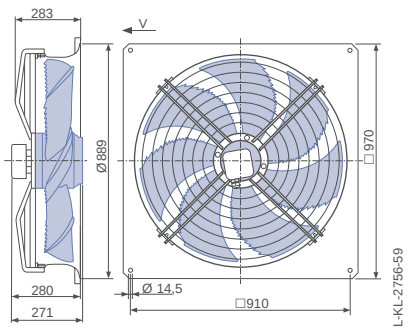

FE2owlet

for three phase alternating current, 4-4 pole

FN091-VD



Description

Motor technology: AC
Rated voltage U_N: **3~ 400 V (Δ/Y) ±10 %***
Rated frequency f_N: **5 Hz***
Input power P_1: **5.20/3.10 kW***
Rated current I_N: **8.80/5.00 A***
Rated speed n_N: **1210/900 min^{-1}***
Starting current I_A: 32.00 / 10.00 A
Current increase ΔI: 0 %
Thermal class: **THCL155***
Min. permitted ambient temperature $t_{R(min)}$: -40 °C
Max. permitted ambient temperature $t_{R(max)}$: 40 °C
Electrical connection: Terminal box
Number of blades: 5
Protection class: IP54
Motor protection: thermal contact
Blades: Aluminium, uncoated
Rotor: Aluminium, uncoated
Conformity: ErP 2015, CE
ErP-data
Efficiency η_{statA}: 38.5 %
Efficiency: N_{actual} = 40.5 / N_{target} = 40**
* Rated data
**ErP 2015

Characteristic curve

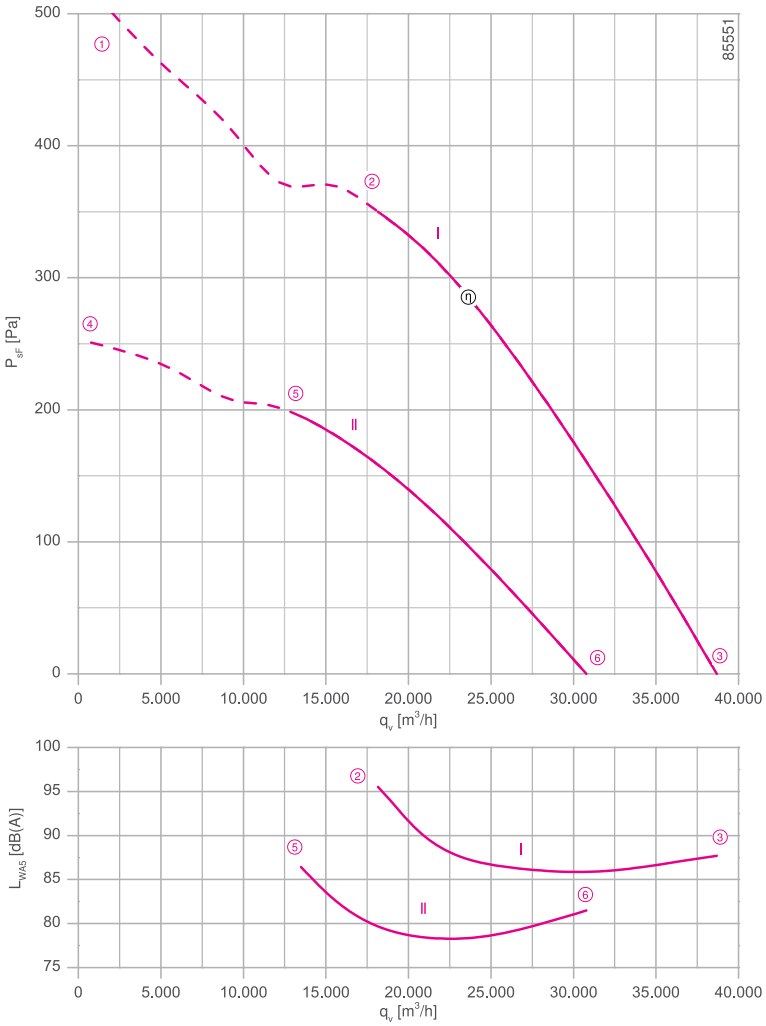

Measured in full bell mouth without guard grille in installation type A according to ISO 5801

Connection diagram Page 531
for airflow direction A 1360-108XB
for airflow direction V 1360-108XA

System components Page 430

Dimensions mm

Airflow direction A

Design Q - square full bell mouth, without guard grille

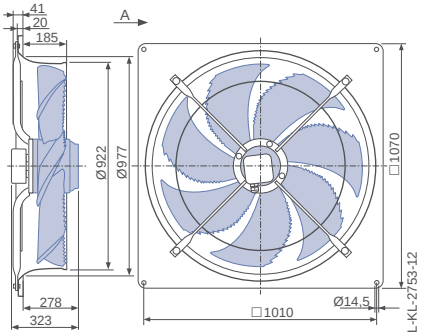

Airflow direction V

Design S - radially bolted, mounted for short bell mouth, guard grille pressure side

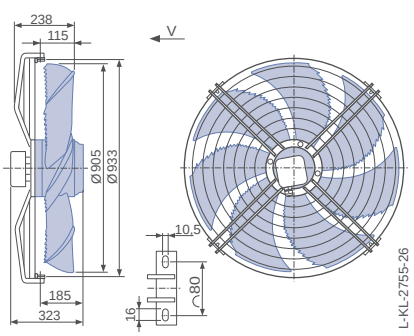

Design I - axial bolted, mounting for bell mouth flange, guard grille pressure side

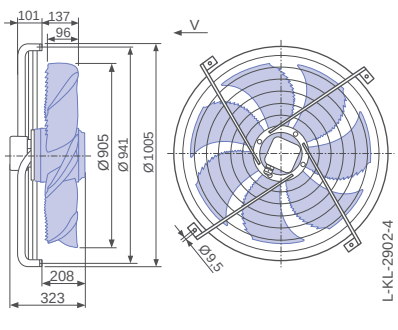

Performance data

Type	Connection	Characteristic curve	Voltage U V	Operating point	Current I A	Input power P_1 W	Speed n min^{-1}	Suction side sound power level L_{WA5} dB(A)
FN091-VD_.7Q._5P1	Δ	I	400	①	11.00	6800	1110	
			400*	②	**8.80***	**5200***	**1210***	96
			400	③	6.80	3800	1300	88
	Y	II	400	④	5.80	3600	750	
			400*	⑤	**5.00***	**3100***	**900***	87
			400	⑥	4.20	2500	1040	82

*rated data

Fan ordering information

Airflow direction A | **Airflow direction V**

Design	Q (without guard grille)	S (guard grille pressure side)	I (guard grille pressure side)	Q (guard grille pressure side)
	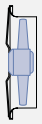			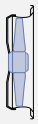
Type **Article no.**	**FN091-VDQ.7Q.A5P1** **155924**	**FN091-VDS.7Q.V5P1** **155926**	**FN091-VDI.7Q.V5P1** **155928**	**FN091-VDQ.7Q.V5P1** **155927**
Weight kg	64.70	52.70	52.00	69.30

Control technology

Frequency inverters Fcontrol 3~	Motor protection units 3~	Electronic voltage controllers 3~
		
Page 480	Page 518	Page 506

Design Q - square full bell mouth, guard grille pressure side

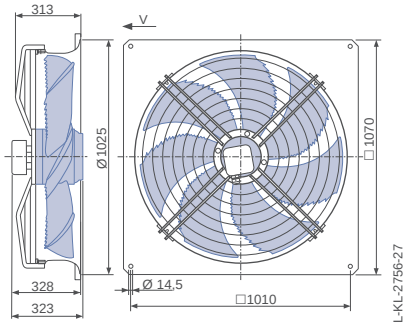

FE2owlet

for three phase alternating current, 6-6 pole

FN091-SD



Description

Motor technology: AC
Rated voltage U_N: **3~ 400 V (Δ/Y) ±10 %***
Rated frequency f_N: **50 Hz*** (60Hz data available)
Input power P_1: **1.85/1.05 kW***
Rated current I_N: **3.80/1.90 A***
Rated speed n_N: **840/ 630 min^{-1}***
Starting current I_A: 11.00 / 3.40 A
Current increase ΔI: 0 %
Thermal class: **THCL155***
Min. permitted ambient temperature $t_{R(min)}$: -40 °C
Max. permitted ambient temperature $t_{R(max)}$: 70 °C
Electrical connection: Terminal box
Number of blades: 7
Protection class: IP54
Motor protection: thermal contact
Blades: Aluminium, uncoated
Rotor: Aluminium, uncoated
Conformity: ErP 2015, CE
ErP-data
Efficiency η_{statA}: 39.2 %
Efficiency: N_{actual} = 44.0 / N_{target} = 40**
* Rated data
**ErP 2015

Characteristic curve

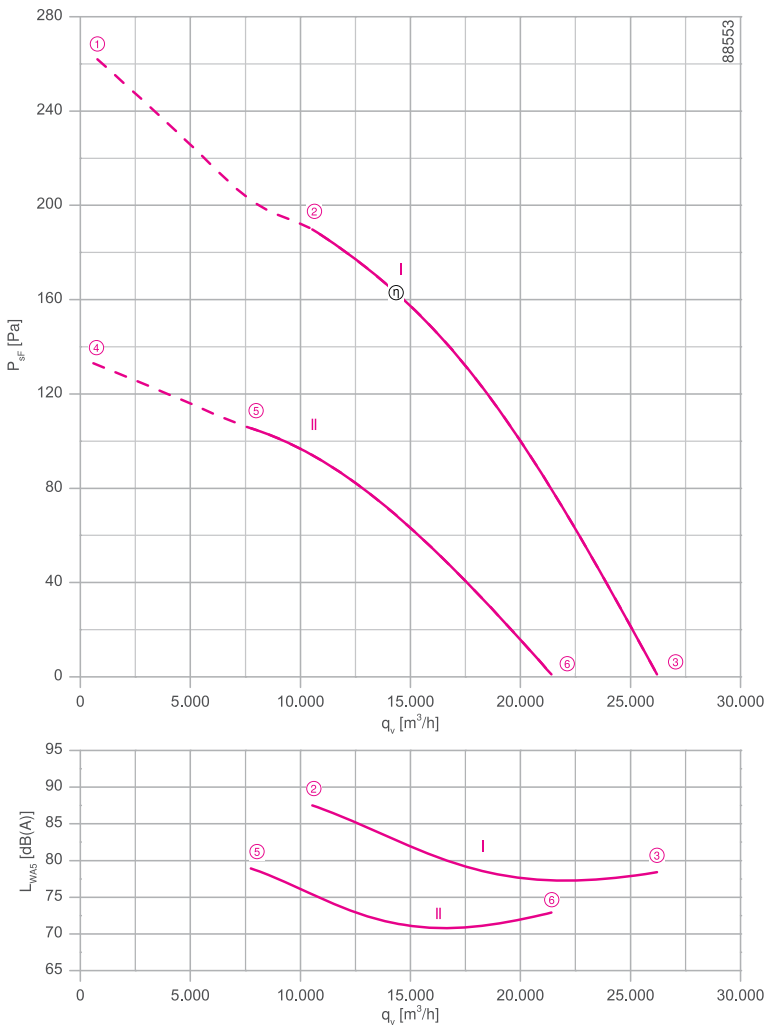

Measured in full bell mouth without guard grille in installation type A according to ISO 5801

Connection diagram Page 531
1360-108XA

System components Page 430

Dimensions mm

Airflow direction V

Design S - radially bolted, mounted for short bell mouth, guard grille pressure side

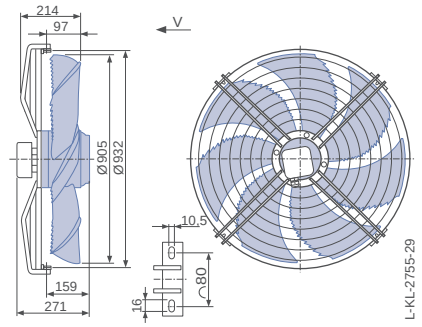

Design I - axial bolted, mounting for bell mouth flange, guard grille pressure side

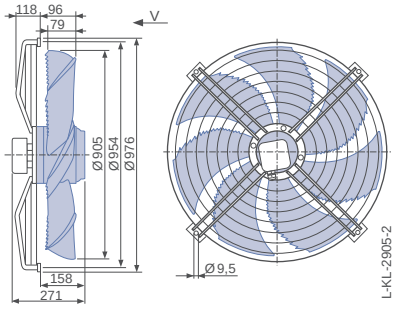

Design Q - square full bell mouth, guard grille pressure side

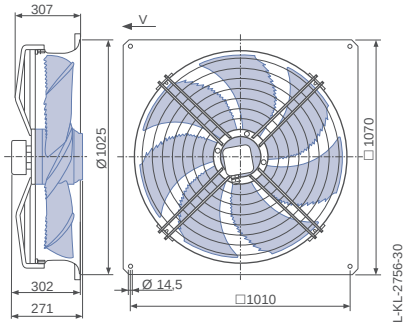

Performance data

Type	Connection	Characteristic curve	Voltage U V	Operating point	Current I A	Input power P_1 W	Speed n min^{-1}	Suction side sound power level L_{WA5} dB(A)
FN091-SD_.6N._7P2	Δ	I	400	①	4.40	2200	790	
			400*	②	**3.80***	**1850***	**840***	88
			400	③	3.10	1250	900	78
	Y	II	400	④	2.10	1200	560	
			400*	⑤	**1.90***	**1050***	**630***	79
			400	⑥	1.55	840	730	73

*rated data

Fan ordering information

Airflow direction V

Design	S (guard grille pressure side)	I (guard grille pressure side)	Q (guard grille pressure side)
			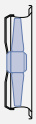
Type **Article no.**	**FN091-SDS.6N.V7P2** **156205**	**FN091-SDI.6N.V7P2** **156203**	**FN091-SDQ.6N.V7P2** **156204**
Weight kg	34.10	34.20	50.70

Control technology

Frequency inverters Fcontrol 3~	Motor protection units 3~	Electronic voltage controllers 3~
		
Page 480	Page 518	Page 506

FE2owlet

for three phase alternating current, 6-6 pole

FN091-SD



Characteristic curve

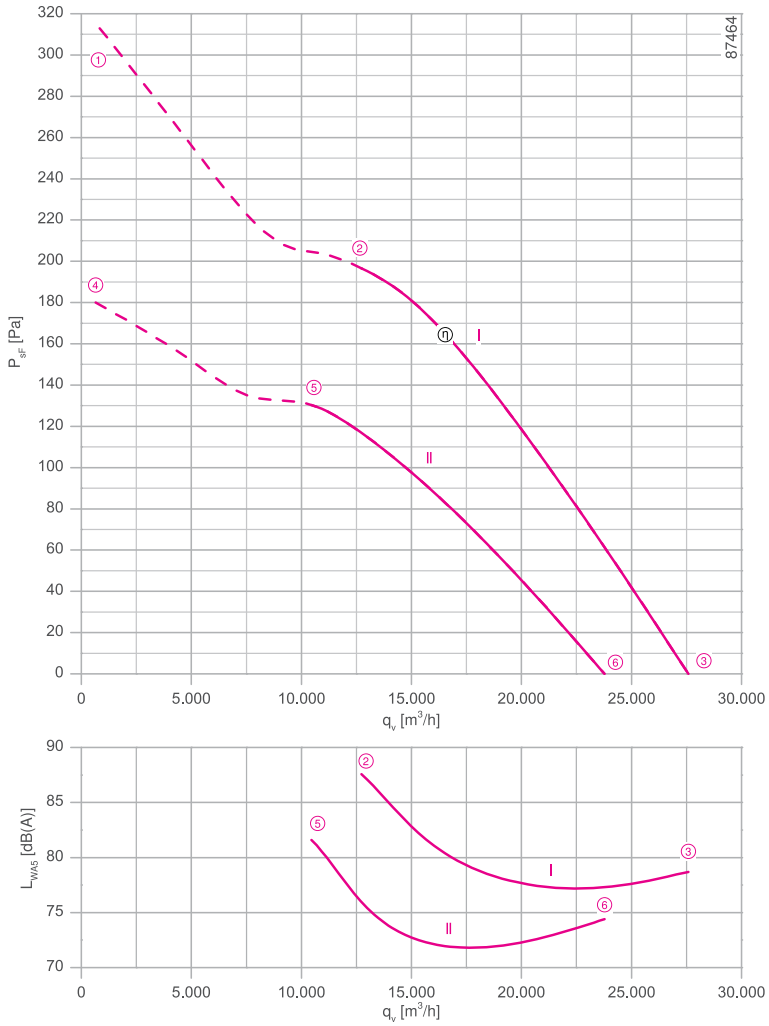

Measured in full bell mouth without guard grille in installation type A according to ISO 5801

Description

Motor technology: AC
Rated voltage U_N: **3~ 400 V (Δ/Y) ±10 %***
Rated frequency f_N: **50 Hz*** (60Hz data available)
Input power P_1: **1.95/1.30 kW***
Rated current I_N: **4.40/2.30 A***
Rated speed n_N: **880/ 720 min^{-1}***
Starting current I_A: 17.00 / 5.50 A
Current increase ΔI: 0 %
Thermal class: **THCL155***
Min. permitted ambient temperature $t_{R(min)}$: -40 °C
Max. permitted ambient temperature $t_{R(max)}$: 70 °C
Electrical connection: Terminal box
Number of blades: 5
Protection class: IP54
Motor protection: thermal contact
Blades: Aluminium, uncoated
Rotor: Aluminium, uncoated
Conformity: ErP 2015, CE
ErP-data
Efficiency η_{statA}: 40.8 %
Efficiency: N_{actual} = 45.4 / N_{target} = 40**
* Rated data
**ErP 2015

Connection diagram Page 531
for airflow direction A 1360-108XB
for airflow direction V 1360-108XA

System components Page 430

Dimensions mm

Airflow direction A

Design Q - square full bell mouth, without guard grille

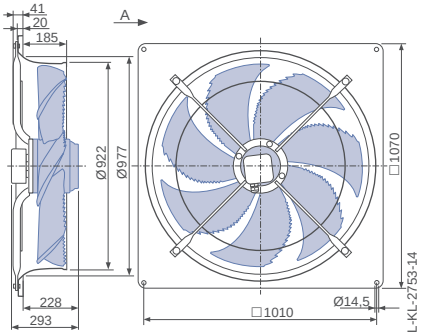

Airflow direction V

Design S - radially bolted, mounted for short bell mouth, guard grille pressure side

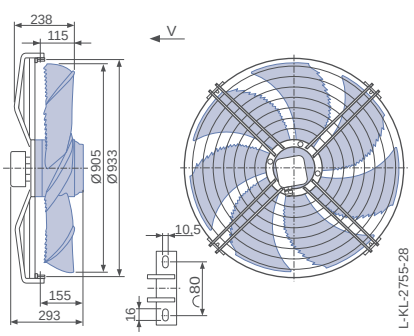

Design I - axial bolted, mounting for bell mouth flange, guard grille pressure side

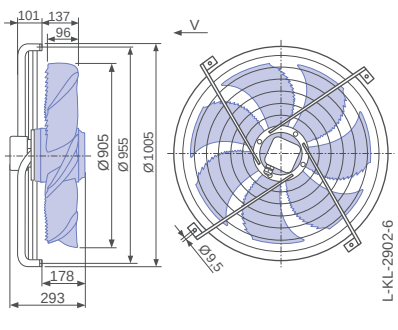

Performance data

Type	Connection	Characteristic curve	Voltage U V	Operating point	Current I A	Input power P_1 W	Speed n min^{-1}	Suction side sound power level L_{WA5} dB(A)
FN091-SD_.7M._5P1	Δ	I	400	①	5.40	2700	830	
			400*	②	**4.40***	**1950***	**880***	88
			400	③	3.90	1400	920	79
	Y	II	400	④	2.80	1600	620	
			400*	⑤	**2.30***	**1300***	**720***	82
			400	⑥	1.80	1000	800	74

*rated data

Fan ordering information

Airflow direction A | Airflow direction V

Design	Q (without guard grille)	S (guard grille pressure side)	I (guard grille pressure side)	Q (guard grille pressure side)
	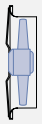			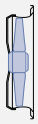
Type	**FN091-SDQ.7M.A5P1**	**FN091-SDS.7M.V5P1**	**FN091-SDI.7M.V5P1**	**FN091-SDQ.7M.V5P1**
Article no.	**156181**	**156183**	**156185**	**156184**
Weight kg	58.20	46.40	45.90	63.00

Control technology

Frequency inverters Fcontrol 3~	Motor protection units 3~	Electronic voltage controllers 3~
		
Page 480	Page 518	Page 506

Design Q - square full bell mouth, guard grille pressure side

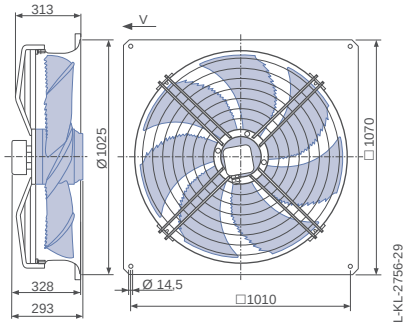

FE2owlet

for three phase alternating current, 8-8 pole

FN091-AD



Description

Motor technology: AC
Rated voltage U_N: **3~ 400 V (Δ/Y) ±10 %***
Rated frequency f_N: **50 Hz*** (60Hz data available)
Input power P_1: **0.90/0.54 kW***
Rated current I_N: **2.20/1.10 A***
Rated speed n_N: **660/ 500 min^{-1}***
Starting current I_A: 5.50 / 1.60 A
Current increase ΔI: 0 %
Thermal class: **THCL155***
Min. permitted ambient temperature $t_{R(min)}$: -40 °C
Max. permitted ambient temperature $t_{R(max)}$: 70 °C
Electrical connection: Terminal box
Number of blades: 7
Protection class: IP54
Motor protection: thermal contact
Blades: Aluminium, uncoated
Rotor: Aluminium, uncoated
Conformity: ErP 2015, CE
ErP-data
Efficiency η_{statA}: 36.5 %
Efficiency: N_{actual} = 43.2 / N_{target} = 40**
* Rated data
**ErP 2015

Characteristic curve

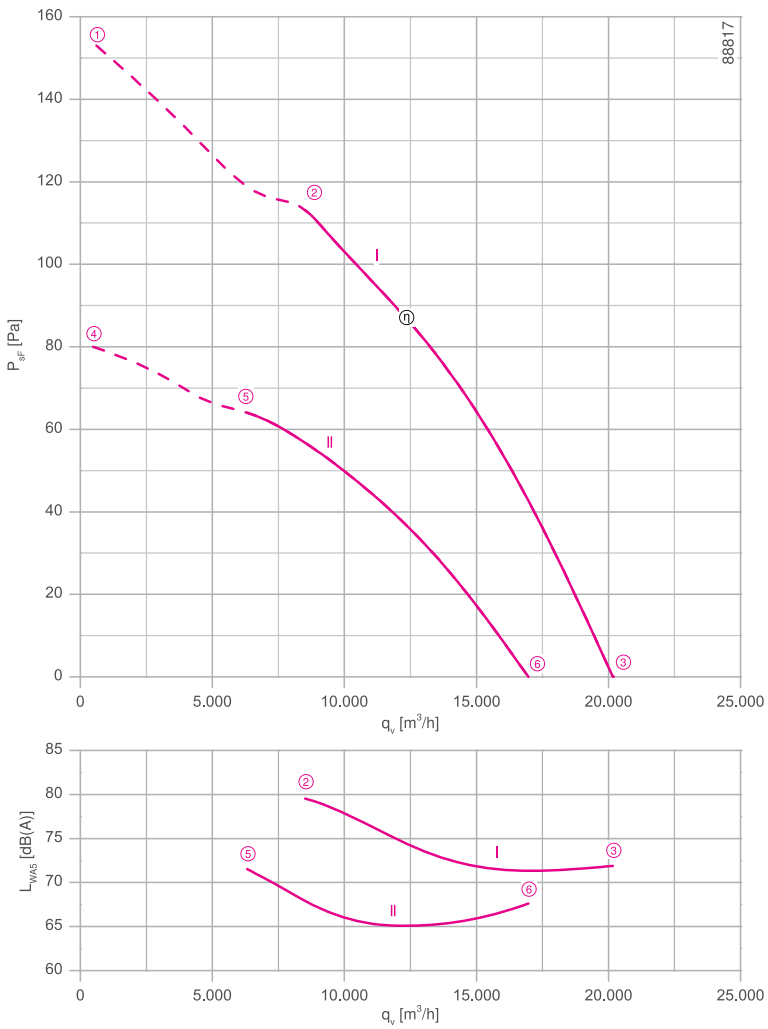

Measured in full bell mouth without guard grille in installation type A according to ISO 5801

Connection diagram Page 531
1360-108XA

System components Page 430

Dimensions mm

Airflow direction V

Design S - radially bolted, mounted for short bell mouth, guard grille pressure side

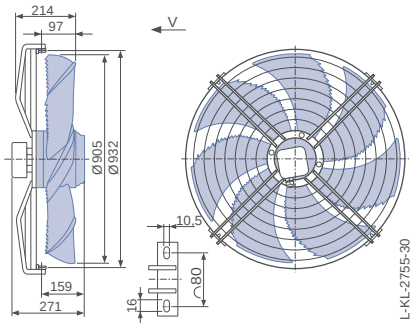

Design I - axial bolted, mounting for bell mouth flange, guard grille pressure side

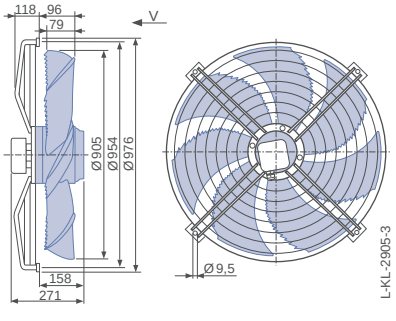

Design Q - square full bell mouth, guard grille pressure side

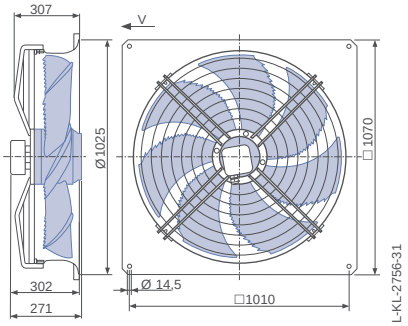

Performance data

Type	Connection	Characteristic curve	Voltage U V	Operating point	Current I A	Input power P_1 W	Speed n min^{-1}	Suction side sound power level L_{WA5} dB(A)
FN091-AD_.6N._7P2	Δ	I	400	①	2.40	1100	620	
			400*	②	**2.20***	**900***	**660***	80
			400	③	1.85	620	690	72
	Y	II	400	④	1.20	600	440	
			400*	⑤	**1.10***	**540***	**500***	72
			400	⑥	0.90	440	590	68

*rated data

Fan ordering information

Airflow direction V

Design	S (guard grille pressure side)	I (guard grille pressure side)	Q (guard grille pressure side)
			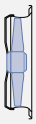
Type **Article no.**	**FN091-ADS.6N.V7P2** **156215**	**FN091-ADI.6N.V7P2** **156213**	**FN091-ADQ.6N.V7P2** **156214**
Weight kg	34.10	34.20	50.70

Control technology

Frequency inverters Fcontrol 3~	Motor protection units 3~	Electronic voltage controllers 3~
		
Page 480	Page 518	Page 506

FE2owlet

for three phase alternating current, 12-12 pole

FN091-ND



Description

Motor technology: AC
Rated voltage U_N: **3~ 400 V (Δ/Y) ±10 %***
Rated frequency f_N: **50 Hz*** (60Hz data available)
Input power P_1: **310/190 W***
Rated current I_N: **0.83/0.39 A***
Rated speed n_N: **440/ 340 min^{-1}***
Current increase ΔI: 0 %
Thermal class: **THCL155***
Min. permitted ambient temperature $t_{R(min)}$: -40 °C
Max. permitted ambient temperature $t_{R(max)}$: 70 °C
Electrical connection: Terminal box
Number of blades: 7
Protection class: IP54
Motor protection: thermal contact
Blades: Aluminium, uncoated
Rotor: Aluminium, uncoated
Conformity: ErP 2015, CE
ErP-data
Efficiency η_{statA}: 30.4 %
Efficiency: N_{actual} = 40.0 / N_{target} = 40**
* Rated data
**ErP 2015

Characteristic curve

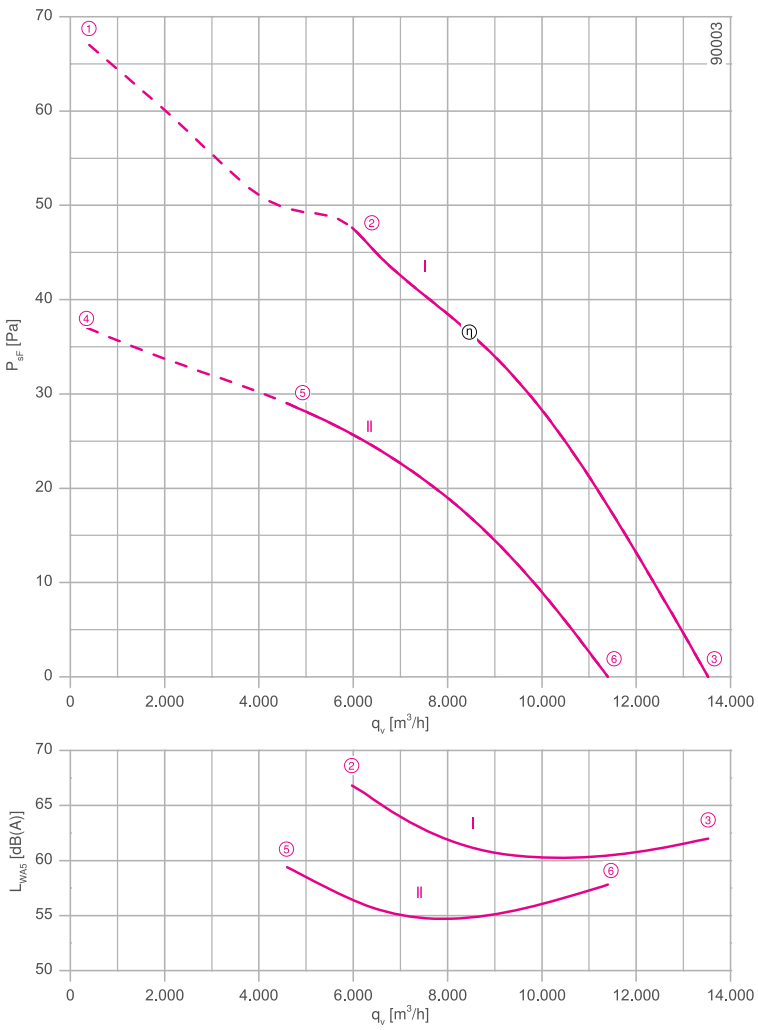

Measured in full bell mouth without guard grille in installation type A according to ISO 5801

Connection diagram Page 531
1360-108XA

System components Page 430

Dimensions mm

Airflow direction V

Design S - radially bolted, mounted for short bell mouth, guard grille pressure side

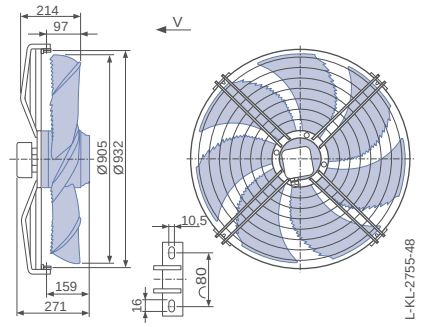

Design I - axial bolted, mounting for bell mouth flange, guard grille pressure side

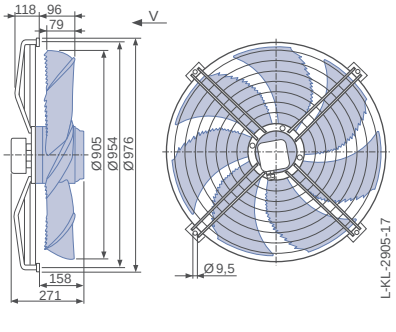

Design Q - square full bell mouth, guard grille pressure side

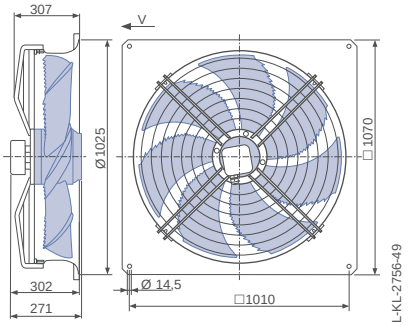

Performance data

Type	Connection	Characteristic curve	Voltage U V	Operating point	Current I A	Input power P_1 W	Speed n min^{-1}	Suction side sound power level L_{WA5} dB(A)
FN091-ND_.6N._7P2	Δ	I	400	①	0.90	380	420	
			400*	②	**0.83***	**310***	**440***	67
			400	③	0.76	240	460	62
	Y	II	400	④	0.42	210	310	
			400*	⑤	**0.39***	**190***	**340***	59
			400	⑥	0.33	150	390	58

*rated data

Fan ordering information

Airflow direction V

Design	S (guard grille pressure side)	I (guard grille pressure side)	Q (guard grille pressure side)
			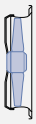
Type **Article no.**	**FN091-NDS.6N.V7P2** **156219**	**FN091-NDI.6N.V7P2** **156217**	**FN091-NDQ.6N.V7P2** **156218**
Weight kg	34.10	34.20	50.70

Control technology

Frequency inverters Fcontrol 3~	Motor protection units 3~	Electronic voltage controllers 3~
		
Page 480	Page 518	Page 506

FE2owlet

for three phase alternating current, 6-6 pole

FN100-SD



Description

Motor technology: AC
Rated voltage U_N: **3~ 400 V (Δ/Y) ±10 %***
Rated frequency f_N: **50 Hz***
Input power P_1: **3.10/1.95 kW***
Rated current I_N: **5.60/3.40 A***
Rated speed n_N: **870/ 660 min^{-1}***
Starting current I_A: 22.00 / 6.50 A
Current increase ΔI: 5 %
Thermal class: **THCL155***
Min. permitted ambient temperature $t_{R(min)}$: -40 °C
Max. permitted ambient temperature $t_{R(max)}$: 65 °C
Electrical connection: Terminal box
Number of blades: 5
Protection class: IP54
Motor protection: thermal contact
Blades: Aluminium, uncoated
Rotor: Aluminium, uncoated
Conformity: ErP 2015, CE
ErP-data
Efficiency η_{statA}: 38.7 %
Efficiency: N_{actual} = 42.1 / N_{target} = 40**
* Rated data
**ErP 2015

Characteristic curve

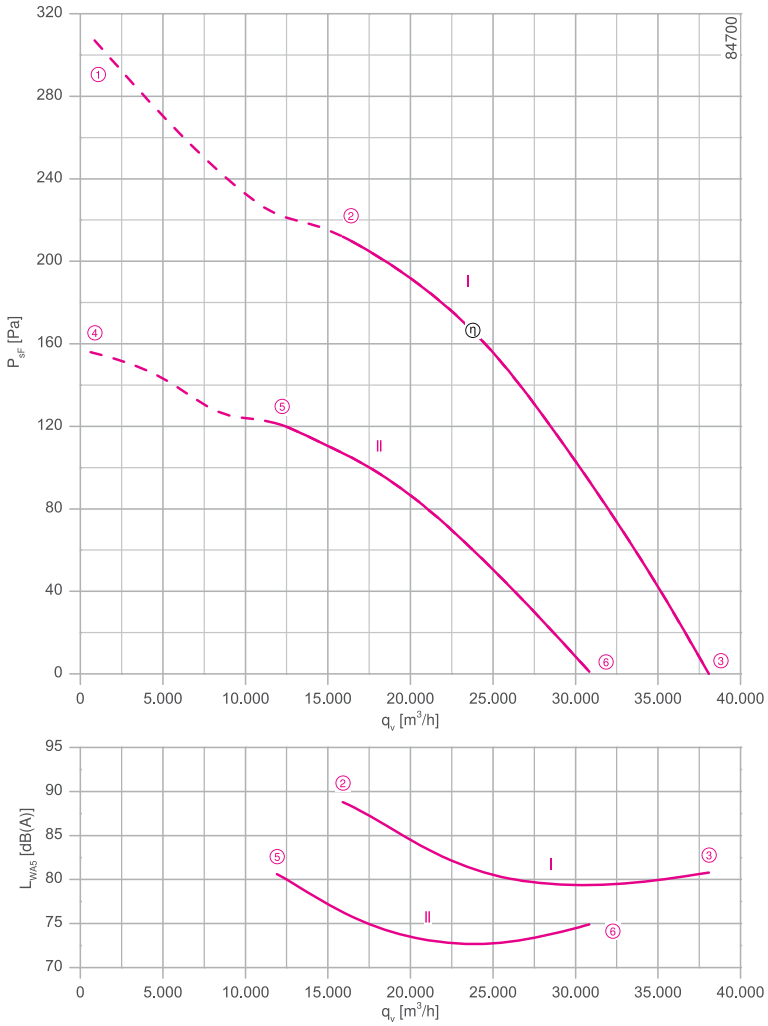

Measured in full bell mouth without guard grille in installation type A according to ISO 5801

Connection diagram Page 531
for airflow direction A 1360-108XB
for airflow direction V 1360-108XA

System components Page 430

Dimensions mm

Airflow direction A

Design Q - square full bell mouth, without guard grille

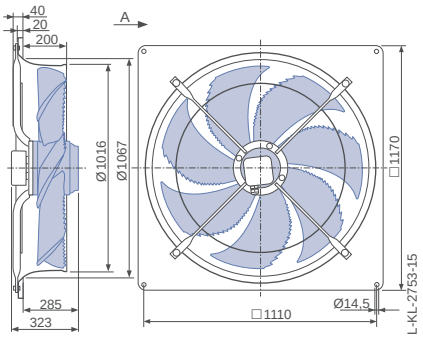

Airflow direction V

Design S - radially bolted, mounted for short bell mouth, guard grille pressure side

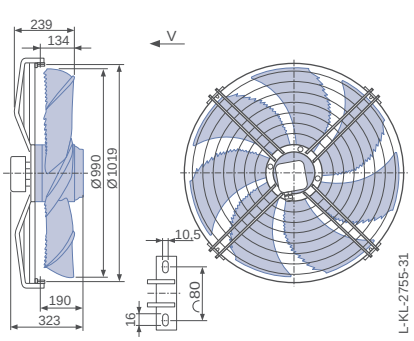

Design I - axial bolted, mounting for bell mouth flange, guard grille pressure side

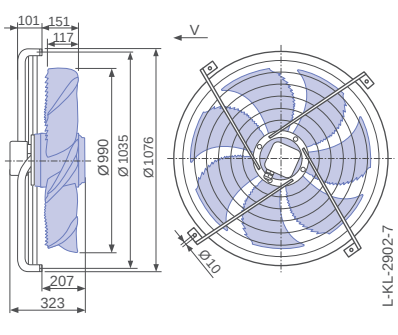

Performance data

Type	Connection	Characteristic curve	Voltage U V	Operating point	Current I A	Input power P_1 W	Speed n min^{-1}	Suction side sound power level L_{WA5} dB(A)
FN100-SD_.7Q._5P1	Δ	I	400	①	6.60	3800	830	
			400*	②	**5.60***	**3100***	**870***	89
			400	③	4.40	2300	910	81
	Y	II	400	④	3.80	2100	590	
			400*	⑤	**3.40***	**1950***	**660***	81
			400	⑥	2.80	1650	740	75

*rated data

Fan ordering information

Airflow direction A | **Airflow direction V**

Design	Q (without guard grille)	S (guard grille pressure side)	I (guard grille pressure side)	Q (guard grille pressure side)
	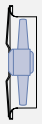			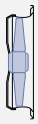
Type **Article no.**	**FN100-SDQ.7Q.A5P1** **155854**	**FN100-SDS.7Q.V5P1** **155858**	**FN100-SDI.7Q.V5P1** **155856**	**FN100-SDQ.7Q.V5P1** **155857**
Weight kg	69.50	55.10	54.30	73.80

Control technology

Frequency inverters Fcontrol 3~	Motor protection units 3~	Electronic voltage controllers 3~
		
Page 480	Page 518	Page 506

Design Q - square full bell mouth, guard grille pressure side

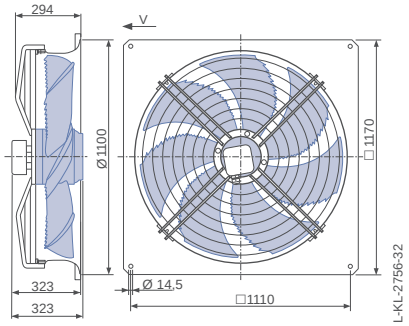

FE2owlet

for three phase alternating current, 6-6 pole

FN100-SD



Description

Motor technology: AC
Rated voltage U_N: **3~ 400 V (Δ/Y) ±10 %***
Rated frequency f_N: **50 Hz*** (60Hz data available)
Input power P_1: **2.70/1.60 kW***
Rated current I_N: **5.40/2.80 A***
Rated speed n_N: **820/ 620 min^{-1}***
Starting current I_A: 18.00 / 6.00 A
Current increase ΔI: 0 %
Thermal class: **THCL155***
Min. permitted ambient temperature $t_{R(min)}$: -40 °C
Max. permitted ambient temperature $t_{R(max)}$: 70 °C
Electrical connection: Terminal box
Number of blades: 5
Protection class: IP54
Motor protection: thermal contact
Blades: Aluminium, uncoated
Rotor: Aluminium, uncoated
Conformity: ErP 2015, CE
ErP-data
Efficiency η_{statA}: 36.8 %
Efficiency: N_{actual} = 40.5 / N_{target} = 40**
* Rated data
**ErP 2015

Characteristic curve

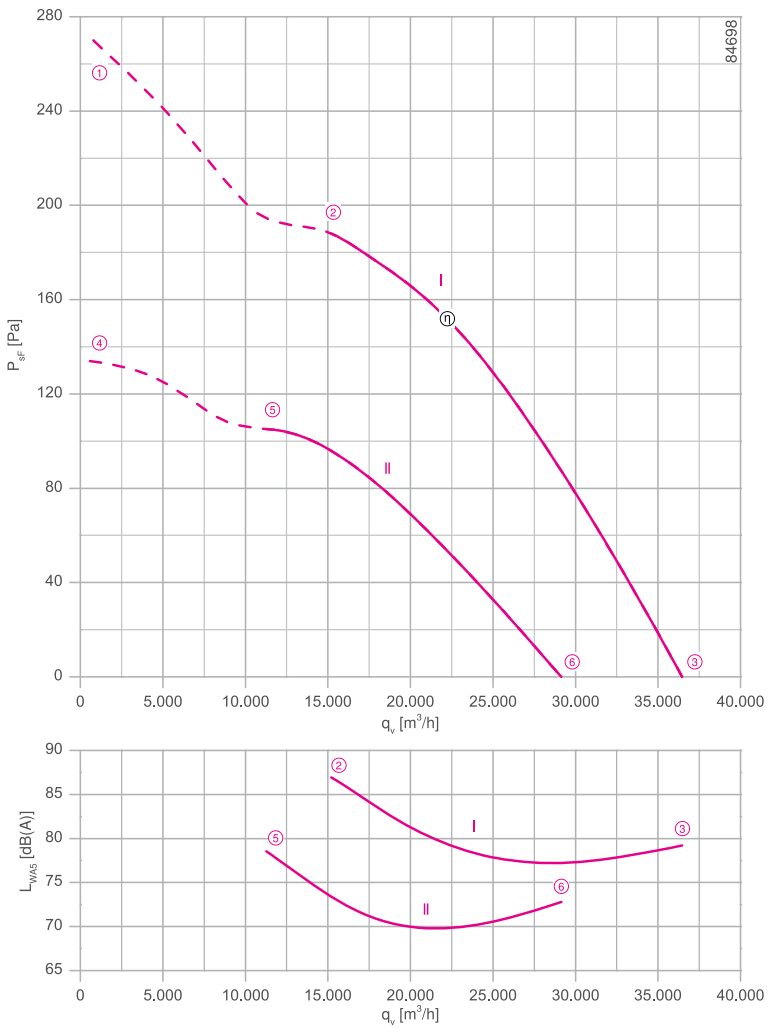

Measured in full bell mouth without guard grille in installation type A according to ISO 5801

Connection diagram Page 531
for airflow direction A 1360-108XB
for airflow direction V 1360-108XA

System components Page 430

Dimensions mm

Airflow direction A

Design Q - square full bell mouth, without guard grille

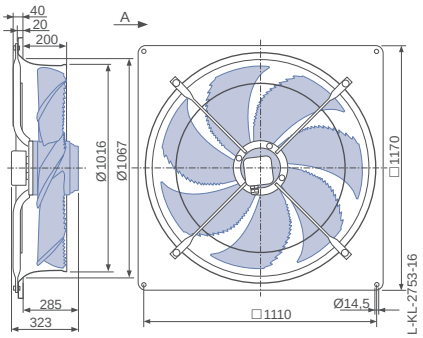

Airflow direction V

Design S - radially bolted, mounted for short bell mouth, guard grille pressure side

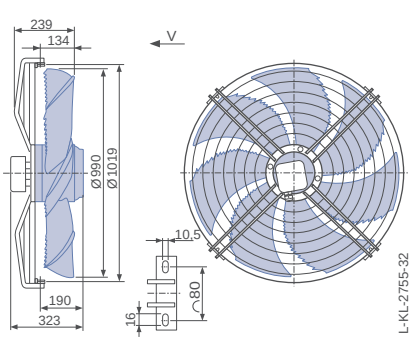

Design I - axial bolted, mounting for bell mouth flange, guard grille pressure side

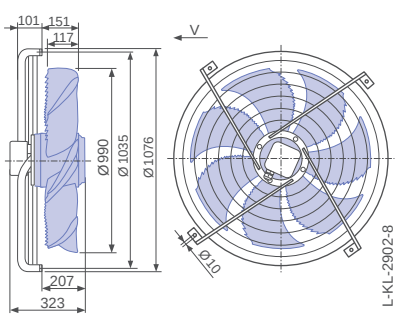

Performance data

Type	Connection	Characteristic curve	Voltage U V	Operating point	Current I A	Input power P_1 W	Speed n min^{-1}	Suction side sound power level L_{WA5} dB(A)
FN100-SD_.7Q._5P1	Δ	I	400	①	6.00	3200	780	
			400*	②	**5.40***	**2700***	**820***	87
			400	③	4.60	2100	870	79
	Y	II	400	④	3.10	1800	560	
			400*	⑤	**2.80***	**1600***	**620***	79
			400	⑥	2.40	1350	700	73

*rated data

Fan ordering information

Airflow direction A | **Airflow direction V**

Design	Q (without guard grille)	S (guard grille pressure side)	I (guard grille pressure side)	Q (guard grille pressure side)
	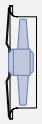			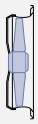
Type	**FN100-SDQ.7Q.A5P1**	**FN100-SDS.7Q.V5P1**	**FN100-SDI.7Q.V5P1**	**FN100-SDQ.7Q.V5P1**
Article no.	**155860**	**155864**	**155862**	**155863**
Weight kg	69.50	55.10	54.30	73.80

Control technology

Frequency inverters Fcontrol 3~	Motor protection units 3~	Electronic voltage controllers 3~
		
Page 480	Page 518	Page 506

Design Q - square full bell mouth, guard grille pressure side

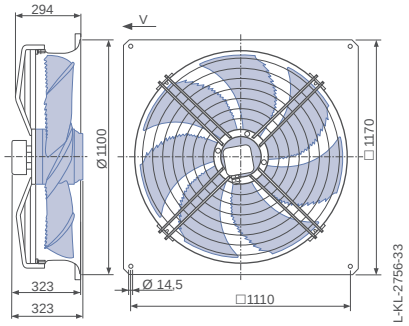

FE2owlet

for three phase alternating current, 8-8 pole

FN100-AD



Description

Motor technology: AC
Rated voltage U_N: **3~ 400 V (Δ/Y) ±10 %***
Rated frequency f_N: **50 Hz***
Input power P_1: **1.55/1.15 kW***
Rated current I_N: **3.40/2.00 A***
Rated speed n_N: **690/ 570 min^{-1}***
Starting current I_A: 14.00 / 4.40 A
Current increase ΔI: 5 %
Thermal class: **THCL155***
Min. permitted ambient temperature $t_{R(min)}$: -40 °C
Max. permitted ambient temperature $t_{R(max)}$: 70 °C
Electrical connection: Terminal box
Number of blades: 5
Protection class: IP54
Motor protection: thermal contact
Blades: Aluminium, uncoated
Rotor: Aluminium, uncoated
Conformity: ErP 2015, CE
ErP-data
Efficiency η_{statA}: 38.0 %
Efficiency: N_{actual} = 43.2 / N_{target} = 40**
* Rated data
**ErP 2015

Characteristic curve

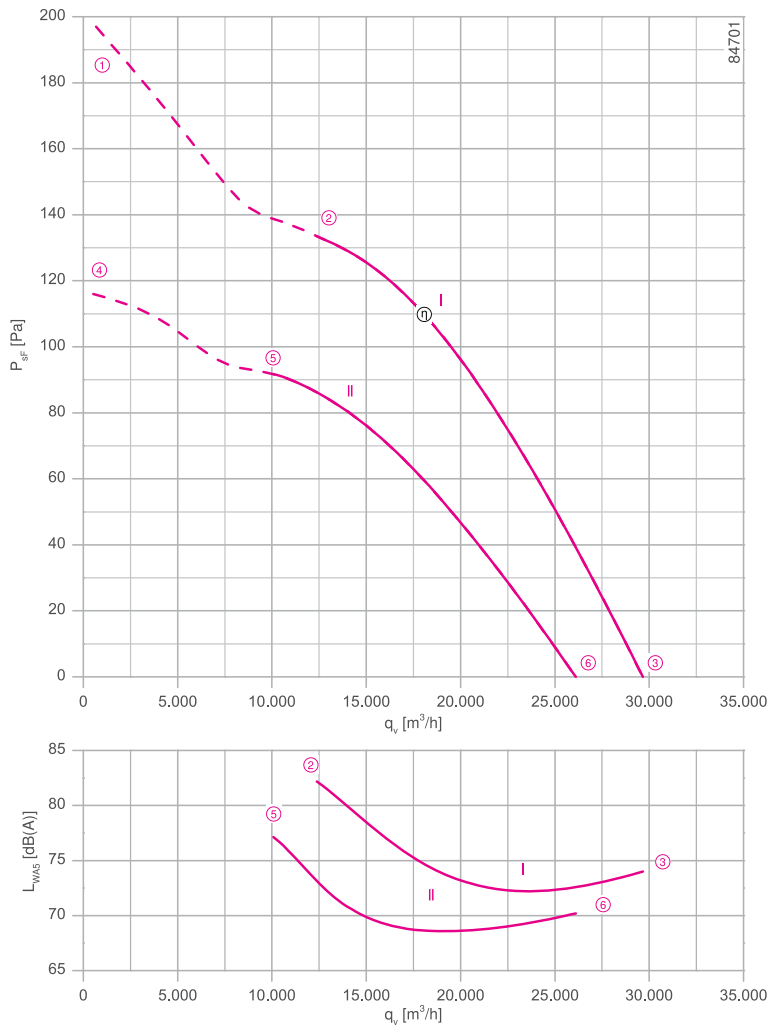

Measured in full bell mouth without guard grille in installation type A according to ISO 5801

Connection diagram Page 531
for airflow direction A 1360-108XB
for airflow direction V 1360-108XA

System components Page 430

Dimensions mm

Airflow direction A

Design Q - square full bell mouth, without guard grille

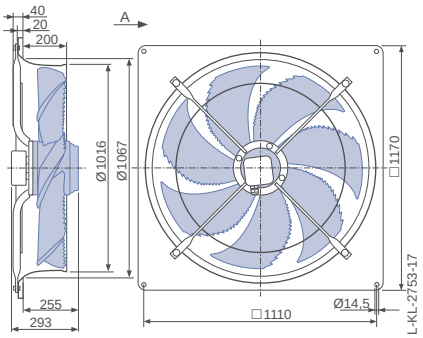

Airflow direction V

Design S - radially bolted, mounted for short bell mouth, guard grille pressure side

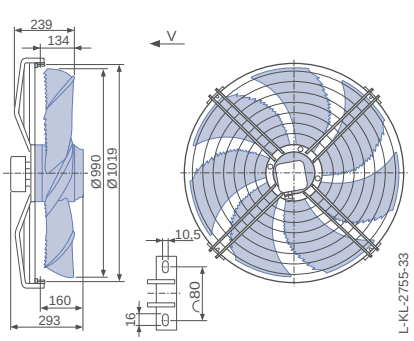

Design I - axial bolted, mounting for bell mouth flange, guard grille pressure side

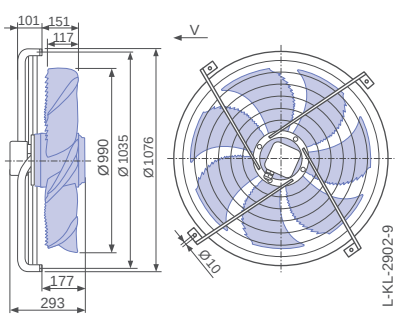

Performance data

Type	Connection	Characteristic curve	Voltage U V	Operating point	Current I A	Input power P_1 W	Speed n min^{-1}	Suction side sound power level L_{WA5} dB(A)
FN100-AD_.7M._5P1	Δ	I	400	①	3.90	2000	670	
			400*	②	**3.40***	**1550***	**690***	82
			400	③	2.90	1150	710	74
	Y	II	400	④	2.40	1350	510	
			400*	⑤	**2.00***	**1150***	**570***	77
			400	⑥	1.60	900	630	70

*rated data

Fan ordering information

Airflow direction A | **Airflow direction V**

Design	Q (without guard grille)	S (guard grille pressure side)	I (guard grille pressure side)	Q (guard grille pressure side)
	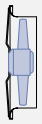			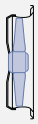
Type	**FN100-ADQ.7M.A5P1**	**FN100-ADS.7M.V5P1**	**FN100-ADI.7M.V5P1**	**FN100-ADQ.7M.V5P1**
Article no.	**155848**	**155852**	**155850**	**155851**
Weight kg	63.00	48.60	47.80	67.90

Control technology

Frequency inverters Fcontrol 3~	Motor protection units 3~	Electronic voltage controllers 3~
		
Page 480	Page 518	Page 506

Design Q - square full bell mouth, guard grille pressure side

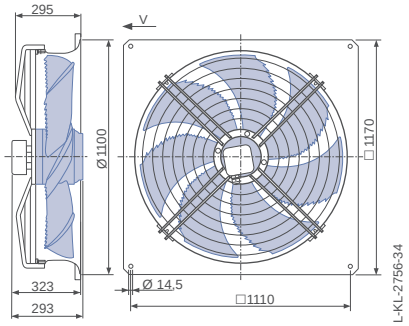

FE2owlet

for three phase alternating current, 8-8 pole

FN100-AD



Description

Motor technology: AC
Rated voltage U_N: **3~ 400 V (Δ/Y) ±10 %***
Rated frequency f_N: **50 Hz*** (60Hz data available)
Input power P_1: **1.25/0.74 kW***
Rated current I_N: **2.90/1.40 A***
Rated speed n_N: **620/ 480 min^{-1}***
Starting current I_A: 14.00 / 4.40 A
Current increase ΔI: 0 %
Thermal class: **THCL155***
Min. permitted ambient temperature $t_{R(min)}$: -40 °C
Max. permitted ambient temperature $t_{R(max)}$: 70 °C
Electrical connection: Terminal box
Number of blades: 5
Protection class: IP54
Motor protection: thermal contact
Blades: Aluminium, uncoated
Rotor: Aluminium, uncoated
Conformity: ErP 2015, CE
ErP-data
Efficiency η_{statA}: 34.3 %
Efficiency: N_{actual} = 40.2 / N_{target} = 40**
* Rated data
**ErP 2015

Characteristic curve

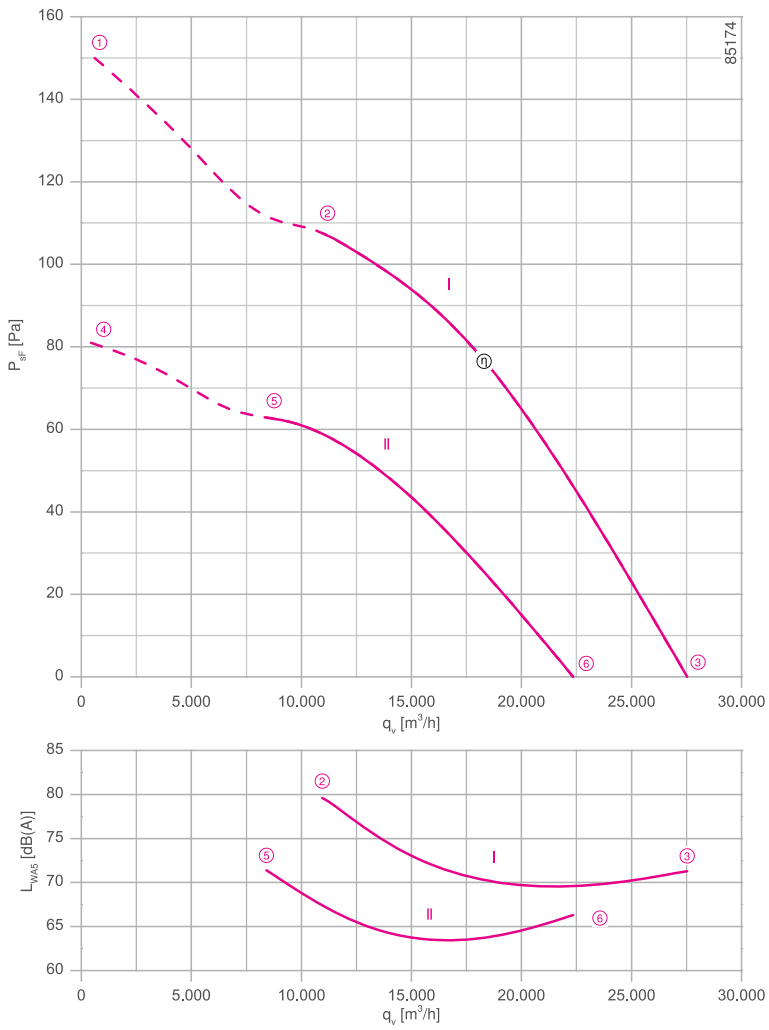

Measured in full bell mouth without guard grille in installation type A according to ISO 5801

Connection diagram Page 531
for airflow direction A 1360-108XB
for airflow direction V 1360-108XA

System components Page 430

Dimensions mm

Airflow direction A

Design Q - square full bell mouth, without guard grille

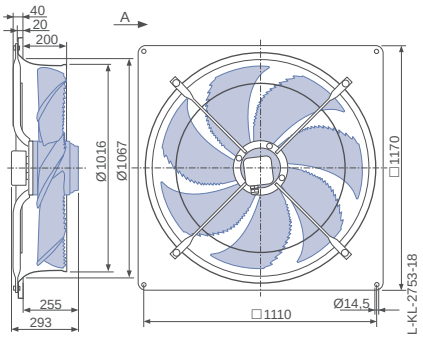

Airflow direction V

Design S - radially bolted, mounted for short bell mouth, guard grille pressure side

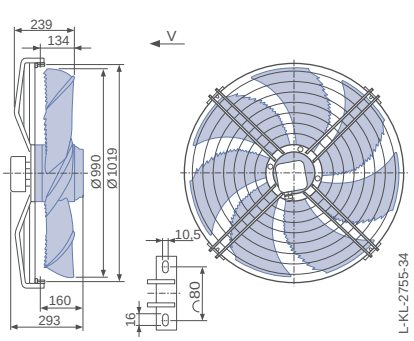

Design I - axial bolted, mounting for bell mouth flange, guard grille pressure side

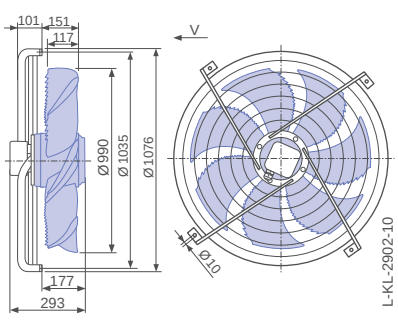

Performance data

Type	Connection	Characteristic curve	Voltage U V	Operating point	Current I A	Input power P_1 W	Speed n min^{-1}	Suction side sound power level L_{WA5} dB(A)
FN100-AD_.7M._5P1	Δ	I	400	①	3.20	1500	590	
			400*	②	**2.90***	**1250***	**620***	80
			400	③	2.70	980	660	71
	Y	II	400	④	1.55	840	430	
			400*	⑤	**1.40***	**740***	**480***	72
			400	⑥	1.20	620	540	66

*rated data

Fan ordering information

Airflow direction A | **Airflow direction V**

Design	Q (without guard grille)	S (guard grille pressure side)	I (guard grille pressure side)	Q (guard grille pressure side)
	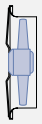			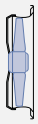
Type **Article no.**	**FN100-ADQ.7M.A5P1** **155866**	**FN100-ADS.7M.V5P1** **155870**	**FN100-ADI.7M.V5P1** **155868**	**FN100-ADQ.7M.V5P1** **155869**
Weight kg	63.00	48.60	47.80	67.90

Control technology

Frequency inverters Fcontrol 3~	Motor protection units 3~	Electronic voltage controllers 3~
		
Page 480	Page 518	Page 506

Design Q - square full bell mouth, guard grille pressure side

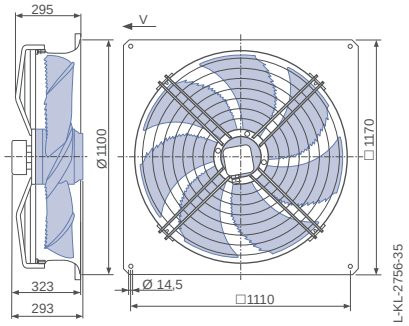

FE2owlet

for three phase alternating current, 10-10 pole

FN100-MD



Description

Motor technology: AC
Rated voltage U_N: **3~ 400 V (Δ/Y) ±10 %***
Rated frequency f_N: **50 Hz*** (60Hz data available)
Input power P_1: **0.88/0.62 kW***
Rated current I_N: **2.50/1.25 A***
Rated speed n_N: **550/ 460 min^{-1}***
Starting current I_A: 8.00 / 2.20 A
Current increase ΔI: 0 %
Thermal class: **THCL155***
Min. permitted ambient temperature $t_{R(min)}$: -40 °C
Max. permitted ambient temperature $t_{R(max)}$: 70 °C
Electrical connection: Terminal box
Number of blades: 5
Protection class: IP54
Motor protection: thermal contact
Blades: Aluminium, uncoated
Rotor: Aluminium, uncoated
Conformity: ErP 2015, CE
ErP-data
Efficiency η_{statA}: 33.4 %
Efficiency: N_{actual} = 40.1 / N_{target} = 40**
* Rated data
**ErP 2015

Characteristic curve

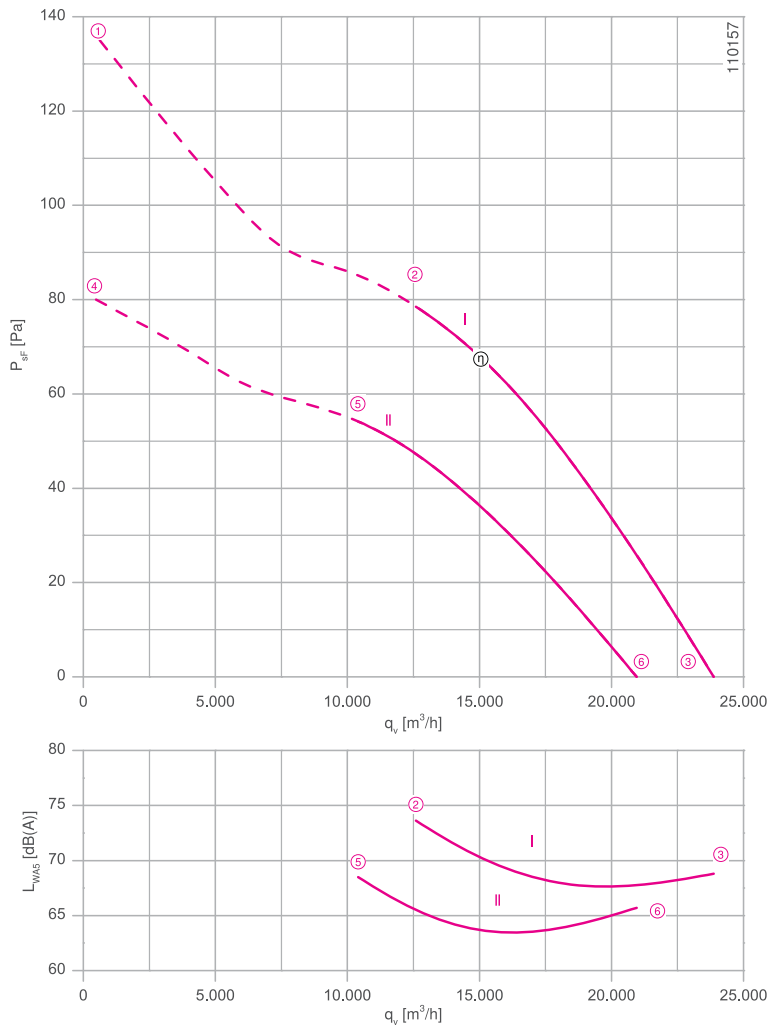

Measured in full bell mouth without guard grille in installation type A according to ISO 5801

Connection diagram Page 531
for airflow direction A 1360-108XB
for airflow direction V 1360-108XA

System components Page 430

Dimensions mm

Airflow direction A

Design Q - square full bell mouth, without guard grille

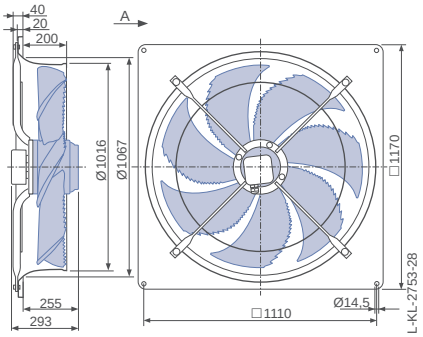

Airflow direction V

Design S - radially bolted, mounted for short bell mouth, guard grille pressure side

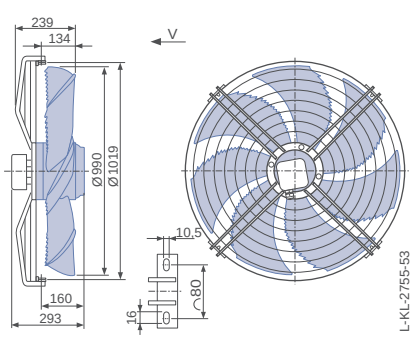

Design I - axial bolted, mounting for bell mouth flange, guard grille pressure side

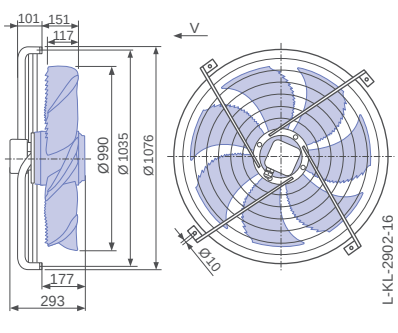

Performance data

Type	Connection	Characteristic curve	Voltage U V	Operating point	Current I A	Input power P_1 W	Speed n min^{-1}	Suction side sound power level L_{WA5} dB(A)
FN100-MD_.7M._5P1	Δ	I	400	①	2.80	1100	540	
			400*	②	**2.50***	**880***	**550***	74
			400	③	2.40	680	570	68
	Y	II	400	④	1.45	700	420	
			400*	⑤	**1.25***	**600***	**460***	69
			400	⑥	1.05	480	500	66

*rated data

Fan ordering information

Airflow direction A | **Airflow direction V**

Design	Q (without guard grille)	S (guard grille pressure side)	I (guard grille pressure side)	Q (guard grille pressure side)
	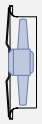			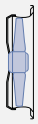
Type **Article no.**	**FN100-MDQ.7M.A5P1** **167942**	**FN100-MDS.7M.V5P1** **167937**	**FN100-MDI.7M.V5P1** **167936**	**FN100-MDQ.7M.V5P1** **167938**
Weight kg	63.00	48.60	47.80	67.90

Control technology

Frequency inverters Fcontrol 3~	Motor protection units 3~	Electronic voltage controllers 3~
		
Page 480	Page 518	Page 506

Design Q - square full bell mouth, guard grille pressure side

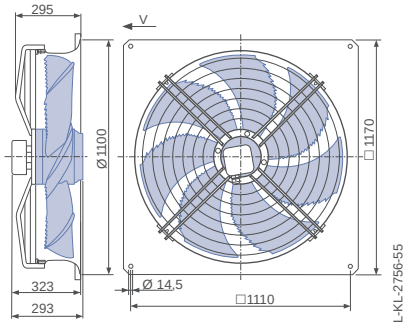

FE2owlet

for three phase alternating current, 12-12 pole

FN100-ND



Description

Motor technology: AC
Rated voltage U_N: **3~ 400 V (Δ/Y) ±10 %***
Rated frequency f_N: **50 Hz*** (60Hz data available)
Input power P_1: **0.50/0.33 kW***
Rated current I_N: **1.40/0.70 A***
Rated speed n_N: **450/370 min^{-1}***
Starting current I_A: 3.80 / 1.20 A
Current increase ΔI: 0 %
Thermal class: **THCL155***
Min. permitted ambient temperature $t_{R(min)}$: -40 °C
Max. permitted ambient temperature $t_{R(max)}$: 70 °C
Electrical connection: Terminal box
Number of blades: 5
Protection class: IP54
Motor protection: thermal contact
Blades: Aluminium, uncoated
Rotor: Aluminium, uncoated
Conformity: ErP 2015, CE
ErP-data
Efficiency η_{statA}: 32.1 %
Efficiency: N_{actual} = 40.4 / N_{target} = 40**
* Rated data
**ErP 2015

Characteristic curve

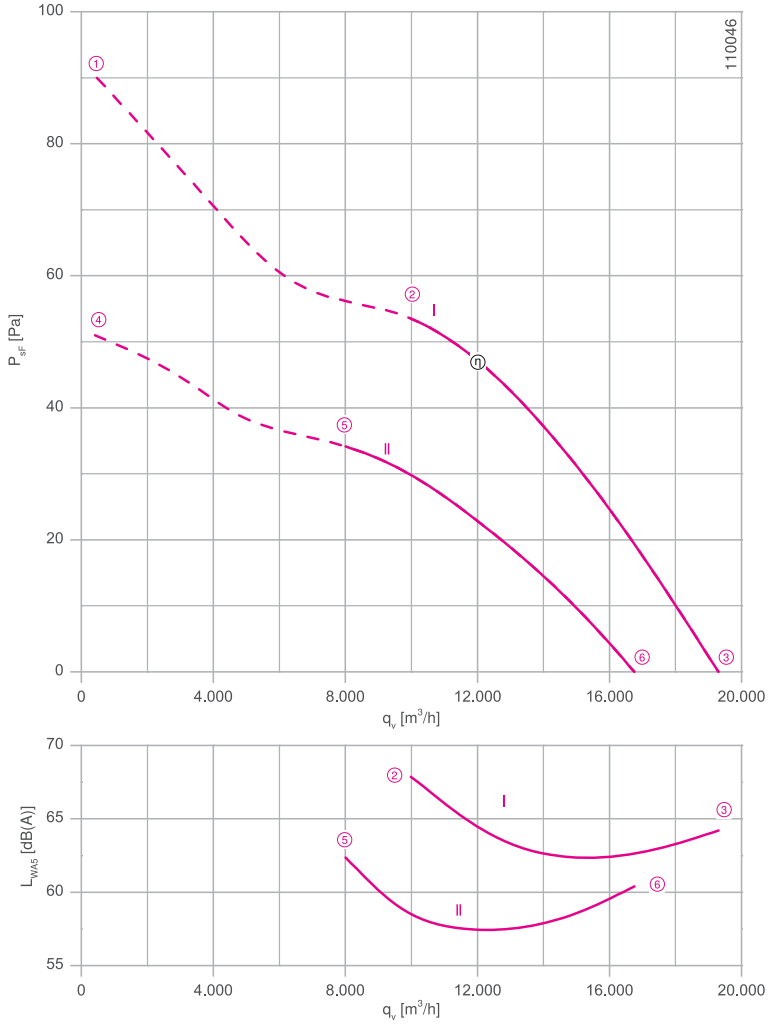

Measured in full bell mouth without guard grille in installation type A according to ISO 5801

Connection diagram Page 531
for airflow direction A 1360-108XB
for airflow direction V 1360-108XA

System components Page 430

Dimensions mm

Airflow direction A

Design Q - square full bell mouth, without guard grille

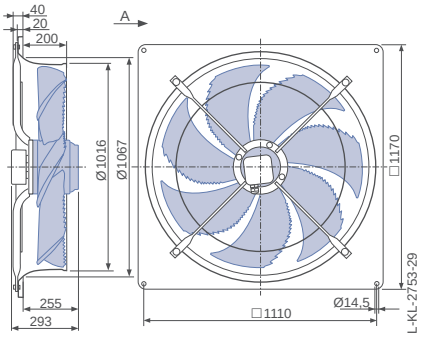

Airflow direction V

Design S - radially bolted, mounted for short bell mouth, guard grille pressure side

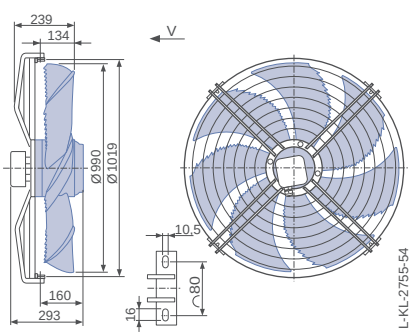

Design I - axial bolted, mounting for bell mouth flange, guard grille pressure side

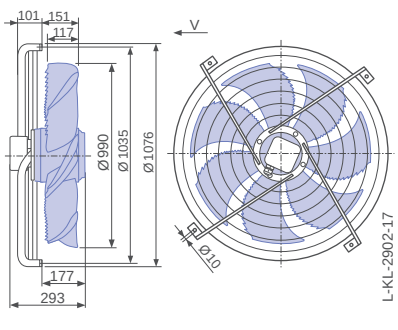

Performance data

Type	Connection	Characteristic curve	Voltage U V	Operating point	Current I A	Input power P_1 W	Speed n min^{-1}	Suction side sound power level L_{WA5} dB(A)
FN100-ND_.7M._5P1	Δ	I	400	①	1.55	600	440	
			400*	②	**1.40***	**500***	**450***	68
			400	③	1.35	380	470	64
	Y	II	400	④	0.78	370	340	
			400*	⑤	**0.70***	**330***	**370***	63
			400	⑥	0.60	270	410	60

*rated data

Fan ordering information

Airflow direction A | **Airflow direction V**

Design	Q (without guard grille)	S (guard grille pressure side)	I (guard grille pressure side)	Q (guard grille pressure side)
	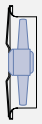			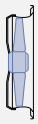
Type **Article no.**	**FN100-NDQ.7M.A5P1** **167940**	**FN100-NDS.7M.V5P1** **160994**	**FN100-NDI.7M.V5P1** **167932**	**FN100-NDQ.7M.V5P1** **167934**
Weight kg	63.00	48.60	47.80	67.90

Control technology

Frequency inverters Fcontrol 3~	Motor protection units 3~	Electronic voltage controllers 3~
		
Page 480	Page 518	Page 506

Design Q - square full bell mouth, guard grille pressure side

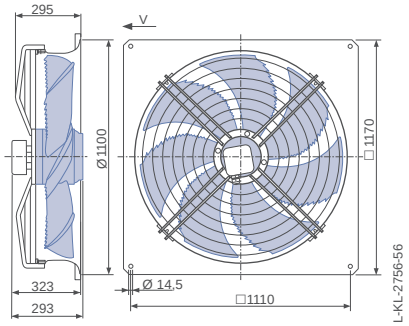

FE2owlet

for three phase alternating current, 10-10 pole

FN125-MD



Description

Motor technology: AC
Rated voltage U_N: **3~ 400 V (Δ/Y) ±10 %***
Rated frequency f_N: **50 Hz***
Input power P_1: **1.95/1.20 kW***
Rated current I_N: **4.60/2.40 A***
Rated speed n_N: **530/ 400 min^{-1}***
Starting current I_A: 14.00 / 4.00 A
Current increase ΔI: 0 %
Thermal class: **THCL155***
Min. permitted ambient temperature $t_{R(min)}$: -40 °C
Max. permitted ambient temperature $t_{R(max)}$: 65 °C
Electrical connection: Terminal box
Number of blades: 3
Protection class: IP54
Motor protection: thermal contact
Blades: Aluminium, uncoated
Rotor: Aluminium, uncoated
Conformity: ErP 2015, CE
ErP-data
Efficiency η_{statA}: 35.9 %
Efficiency: N_{actual} = 40.5 / N_{target} = 40**
* Rated data
**ErP 2015

Characteristic curve

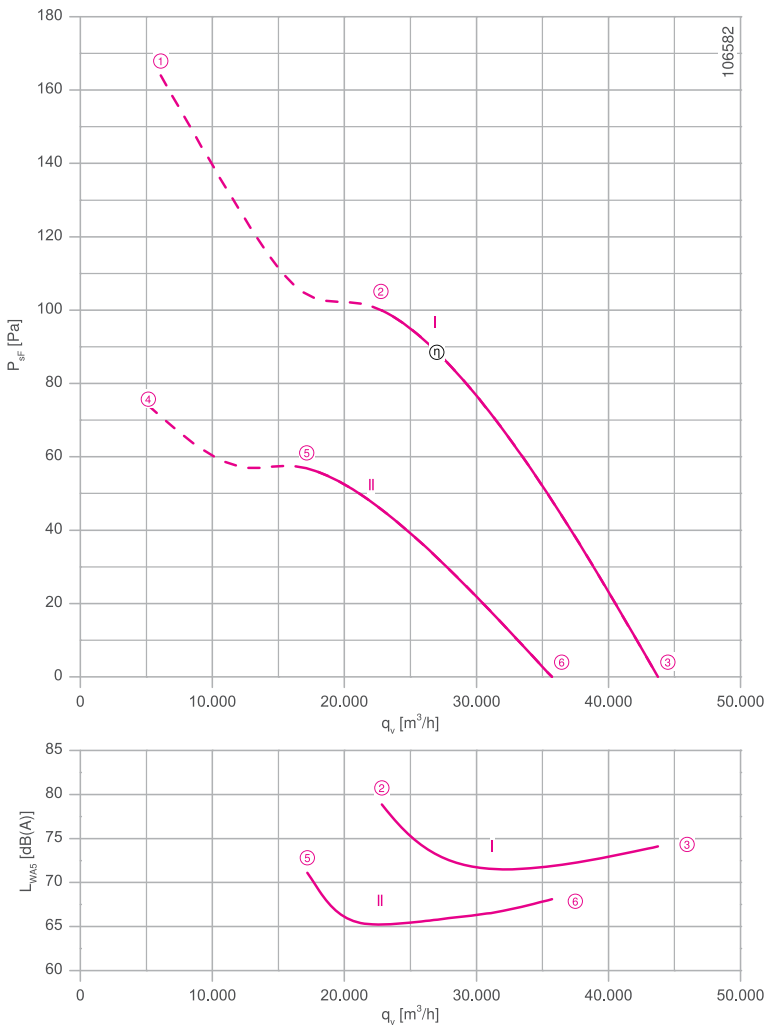

Measured in full bell mouth without guard grille in installation type A according to ISO 5801

Connection diagram Page 531
for airflow direction A 1360-108XB
for airflow direction V 1360-108XA

System components Page 430

Dimensions mm

Airflow direction A

Design F - flange ring with two flanges, without guard grille

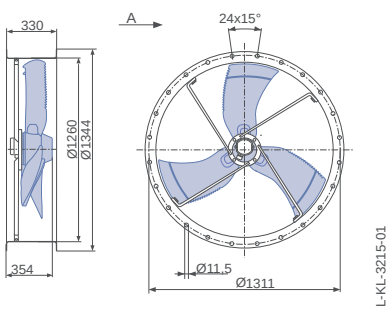

Design L - round full bell mouth, without guard grille

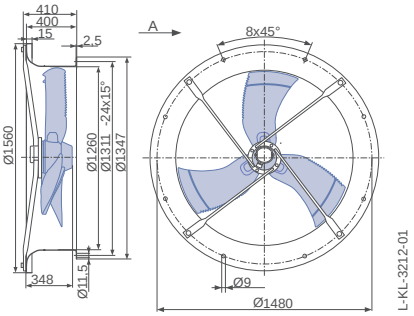

Airflow direction V

Design I - axial bolted, mounting for bell mouth flange, guard grille pressure side

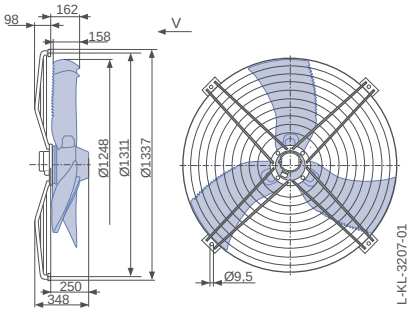

Performance data

Type	Connection	Characteristic curve	Voltage U V	Operating point	Current I A	Input power P_1 W	Speed n min^{-1}	Suction side sound power level L_{WA5} dB(A)
FN125-MD_.7Q._3P1	Δ	I	400	①	5.40	2500	500	
			400*	②	**4.60***	**1950***	**530***	79
			400	③	4.20	1550	550	74
	Y	II	400	④	2.70	1300	340	
			400*	⑤	**2.40***	**1200***	**400***	71
			400	⑥	2.10	1000	450	68

*rated data

Fan ordering information

Airflow direction A | **Airflow direction V**

Design	F (without guard grille)	L (without guard grille)	I (guard grille pressure side)	L (guard grille pressure side)	L (guard grille two-sided)
	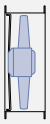	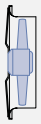		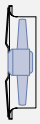	
Type	**FN125-MDF.7Q.A3P1**	**FN125-MDL.7Q.A3P1**	**FN125-MDI.7Q.V3P1**	**FN125-MDL.7Q.V3P1**	**FN125-MDL.7Q.V3P1**
Article no.	**167460**	**167461**	**167459**	**167452**	**167453**
Weight kg	86.90	101.00	61.40	106.10	113.70

Control technology

Frequency inverters Fcontrol 3~	Motor protection units 3~	Electronic voltage controllers 3~
		
Page 480	Page 518	Page 506

Design L - round full bell mouth, guard grille pressure side

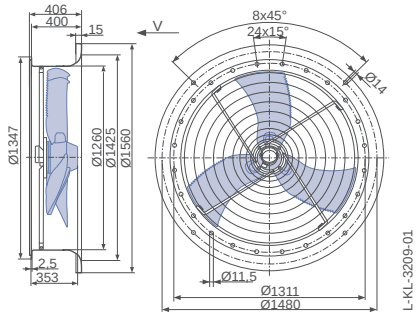

Design L - round full bell mouth, guard grille two-sided

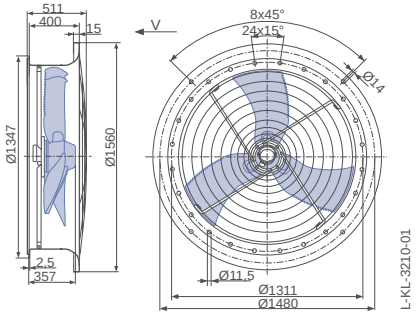

FE2owlet

for three phase alternating current, 12-12 pole

FN125-ND



Characteristic curve

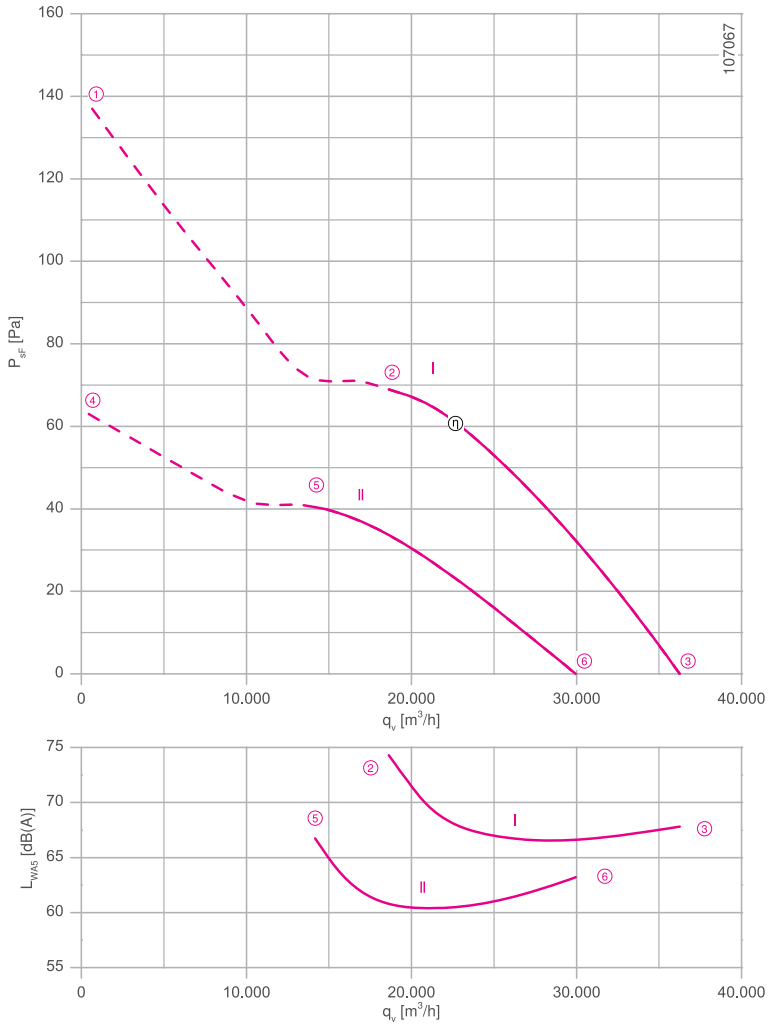

Measured in full bell mouth without guard grille in installation type A according to ISO 5801

Description

Motor technology: AC
Rated voltage U_N: **3~ 400 V (Δ/Y) ±10 %***
Rated frequency f_N: **50 Hz*** (60Hz data available)
Input power P_1: **1.15/0.70 kW***
Rated current I_N: **3.10/1.50 A***
Rated speed n_N: **440/ 330 min^{-1}***
Starting current I_A: 7.50 / 2.40 A
Current increase ΔI: 0 %
Thermal class: **THCL155***
Min. permitted ambient temperature $t_{R(min)}$: -40 °C
Max. permitted ambient temperature $t_{R(max)}$: 70 °C
Electrical connection: Terminal box
Number of blades: 3
Protection class: IP54
Motor protection: thermal contact
Blades: Aluminium, uncoated
Rotor: Aluminium, uncoated
Conformity: ErP 2015, CE
ErP-data
Efficiency η_{statA}: 34.5 %
Efficiency: N_{actual} = 40.6 / N_{target} = 40**
* Rated data
**ErP 2015

Connection diagram Page 531
for airflow direction A 1360-108XB
for airflow direction V 1360-108XA

System components Page 430

Dimensions mm

Airflow direction A

Design F - flange ring with two flanges, without guard grille

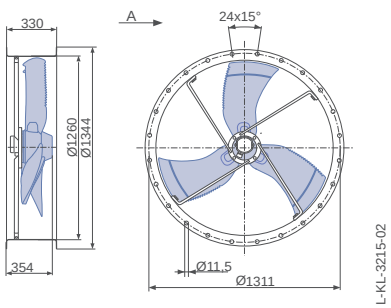

Design L - round full bell mouth, without guard grille

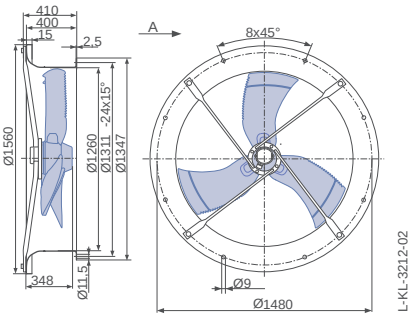

Airflow direction V

Design I - axial bolted, mounting for bell mouth flange, guard grille pressure side

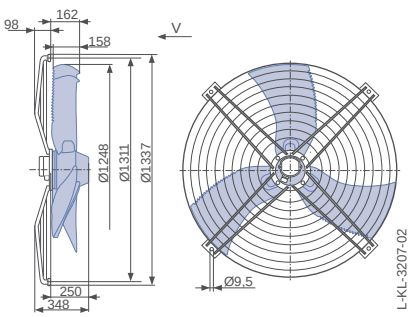

Performance data

Type	Connection	Characteristic curve	Voltage U V	Operating point	Current I A	Input power P_1 W	Speed n min^{-1}	Suction side sound power level L_{WA5} dB(A)
FN125-ND_.7Q._3P1	Δ	I	400	①	3.70	1600	400	
			400*	②	**3.10***	**1150***	**440***	74
			400	③	2.90	920	450	68
	Y	II	400	④	1.75	800	270	
			400*	⑤	**1.50***	**700***	**330***	67
			400	⑥	1.35	600	370	63

*rated data

Fan ordering information

Airflow direction A | **Airflow direction V**

Design	F (without guard grille)	L (without guard grille)	I (guard grille pressure side)	L (guard grille pressure side)	L (guard grille two-sided)
	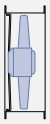	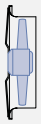		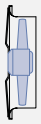	
Type	**FN125-NDF.7Q.A3P1**	**FN125-NDL.7Q.A3P1**	**FN125-NDI.7Q.V3P1**	**FN125-NDL.7Q.V3P1**	**FN125-NDL.7Q.V3P1**
Article no.	**167472**	**167473**	**167471**	**167464**	**167465**
Weight kg	86.90	101.00	61.40	106.10	113.70

Control technology

Frequency inverters Fcontrol 3~	Motor protection units 3~	Electronic voltage controllers 3~
		
Page 480	Page 518	Page 506

Design L - round full bell mouth, guard grille pressure side

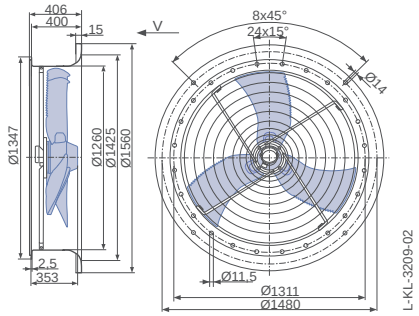

Design L - round full bell mouth, guard grille two-sided

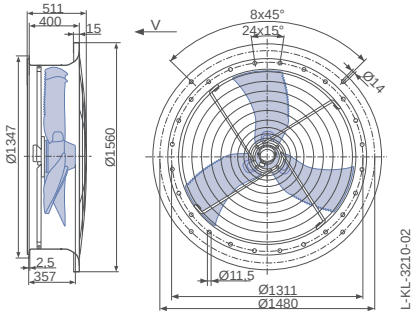


Bewegung durch Perfektion | Movement by Perfection
ZIEHL-ABEG



Axial fans FE2owlet ECblue with ZAplus

EC-Technology

Product overview

Quick selection	Page 280
Size 450	Page 282
Size 500	Page 286
Size 630	Page 294
Size 710	Page 310
Size 800	Page 326
Size 910	Page 340

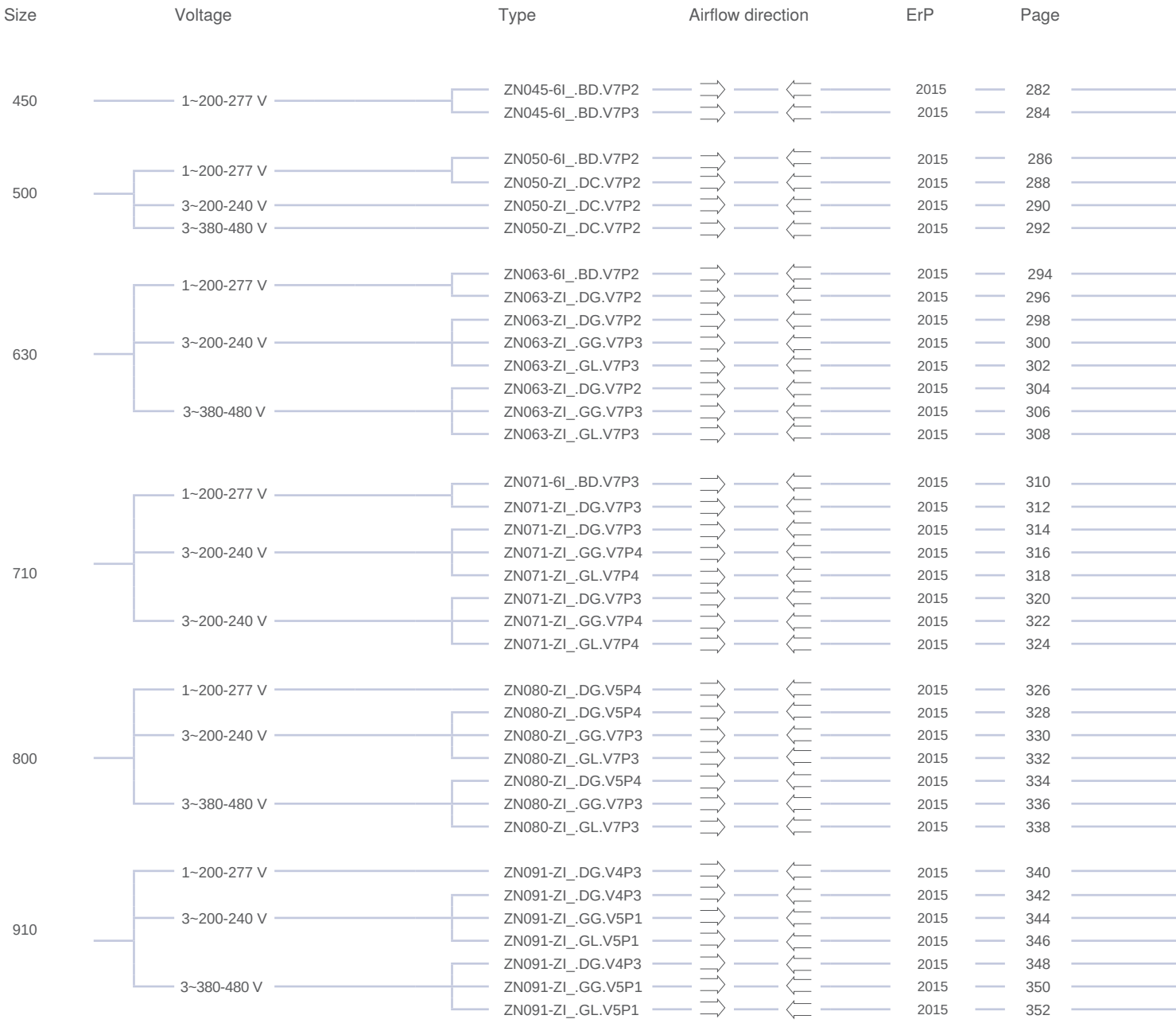
Size
Voltage
Type
Airflow direction
ErP
Page
450
1~200-277 V
ZN045-6I_.BD.V7P2
2015
282
ZN045-6I_.BD.V7P3
2015
284
500
1~200-277 V
ZN050-6I_.BD.V7P2
2015
286
ZN050-ZI_.DC.V7P2
2015
288
3~200-240 V
ZN050-ZI_.DC.V7P2
2015
290
3~380-480 V
ZN050-ZI_.DC.V7P2
2015
292
630
1~200-277 V
ZN063-6I_.BD.V7P2
2015
294
ZN063-ZI_.DG.V7P2
2015
296
3~200-240 V
ZN063-ZI_.DG.V7P2
2015
298
ZN063-ZI_.GG.V7P3
2015
300
ZN063-ZI_.GL.V7P3
2015
302
3~380-480 V
ZN063-ZI_.DG.V7P2
2015
304
ZN063-ZI_.GG.V7P3
2015
306
ZN063-ZI_.GL.V7P3
2015
308
710
1~200-277 V
ZN071-6I_.BD.V7P3
2015
310
ZN071-ZI_.DG.V7P3
2015
312
3~200-240 V
ZN071-ZI_.DG.V7P3
2015
314
ZN071-ZI_.GG.V7P4
2015
316
ZN071-ZI_.GL.V7P4
2015
318
3~200-240 V
ZN071-ZI_.DG.V7P3
2015
320
ZN071-ZI_.GG.V7P4
2015
322
ZN071-ZI_.GL.V7P4
2015
324
800
1~200-277 V
ZN080-ZI_.DG.V5P4
2015
326
ZN080-ZI_.DG.V5P4
2015
328
3~200-240 V
ZN080-ZI_.GG.V7P3
2015
330
ZN080-ZI_.GL.V7P3
2015
332
ZN080-ZI_.DG.V5P4
2015
334
3~380-480 V
ZN080-ZI_.GG.V7P3
2015
336
ZN080-ZI_.GL.V7P3
2015
338
910
1~200-277 V
ZN091-ZI_.DG.V4P3
2015
340
ZN091-ZI_.DG.V4P3
2015
342
3~200-240 V
ZN091-ZI_.GG.V5P1
2015
344
ZN091-ZI_.GL.V5P1
2015
346
ZN091-ZI_.DG.V4P3
2015
348
3~380-480 V
ZN091-ZI_.GG.V5P1
2015
350
ZN091-ZI_.GL.V5P1
2015
352

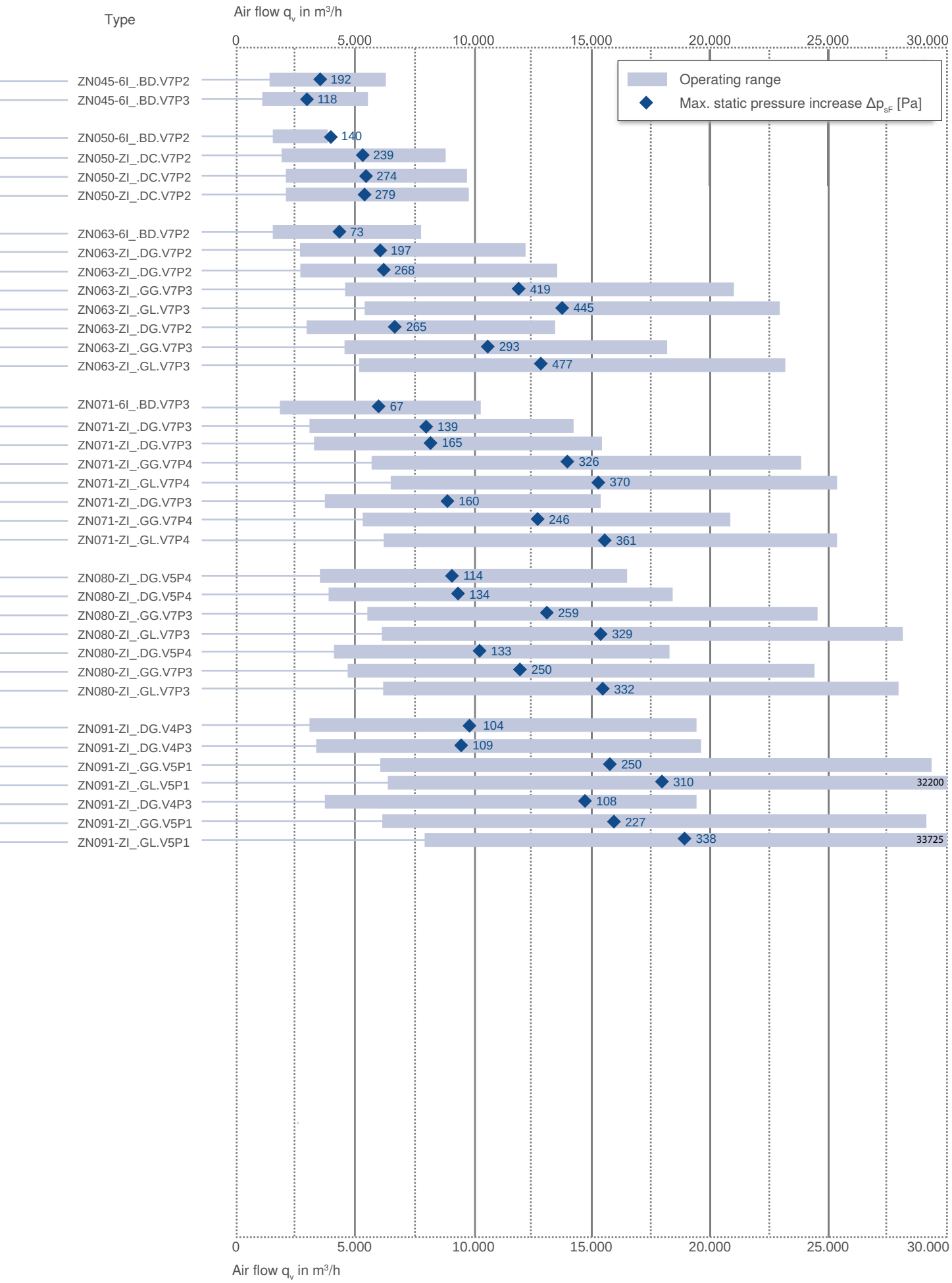
Type
Air flow q_v in m³/h
0
5.000
10.000
15.000
20.000
25.000
30.000
Operating range
Max. static pressure increase Δp_{sF} [Pa]
ZN045-6I_.BD.V7P2
192
ZN045-6I_.BD.V7P3
118
ZN050-6I_.BD.V7P2
140
ZN050-ZI_.DC.V7P2
239
ZN050-ZI_.DC.V7P2
274
ZN050-ZI_.DC.V7P2
279
ZN063-6I_.BD.V7P2
73
ZN063-ZI_.DG.V7P2
197
ZN063-ZI_.DG.V7P2
268
ZN063-ZI_.GG.V7P3
419
ZN063-ZI_.GL.V7P3
445
ZN063-ZI_.DG.V7P2
265
ZN063-ZI_.GG.V7P3
293
ZN063-ZI_.GL.V7P3
477
ZN071-6I_.BD.V7P3
67
ZN071-ZI_.DG.V7P3
139
ZN071-ZI_.DG.V7P3
165
ZN071-ZI_.GG.V7P4
326
ZN071-ZI_.GL.V7P4
370
ZN071-ZI_.DG.V7P3
160
ZN071-ZI_.GG.V7P4
246
ZN071-ZI_.GL.V7P4
361
ZN080-ZI_.DG.V5P4
114
ZN080-ZI_.DG.V5P4
134
ZN080-ZI_.GG.V7P3
259
ZN080-ZI_.GL.V7P3
329
ZN080-ZI_.DG.V5P4
133
ZN080-ZI_.GG.V7P3
250
ZN080-ZI_.GL.V7P3
332
ZN091-ZI_.DG.V4P3
104
ZN091-ZI_.DG.V4P3
109
ZN091-ZI_.GG.V5P1
250
ZN091-ZI_.GL.V5P1
310
32200
ZN091-ZI_.DG.V4P3
108
ZN091-ZI_.GG.V5P1
227
ZN091-ZI_.GL.V5P1
338
33725
0
5.000
10.000
15.000
20.000
25.000
30.000
Air flow q_v in m³/h

FE2owlet-ECblue with ZAplus

for single phase alternating current, 200-277 V

ZN045



Characteristic curve

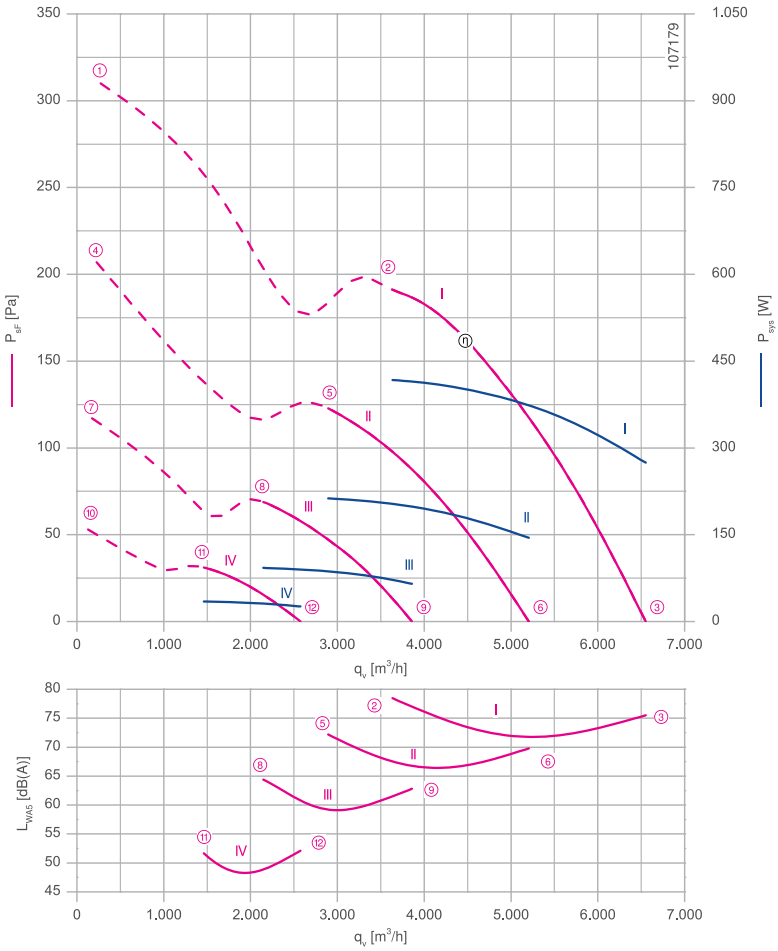

Measured in ZAplus without guard grille in installation type A according to ISO 5801

Description

Motor technology: EC
Rated voltage U_N: **1~ 200-277 V***
Rated frequency f_N: **50/60 Hz***
Input power P_{sys}: **420 W***
Rated current I_N: **2.10- 1.50 A***
Rated speed n_N: **1470 min^{-1}***
Thermal class: **THCL155***
Min. permitted ambient temperature $t_{R(min)}$: -35 °C
Max. permitted ambient temperature $t_{R(max)}$: 60 °C
Electrical connection: integrated Controller
Number of blades: 7
Protection class: IP54
Motor protection: Integrated active temperature management
Blades: High Performance Composite Material, uncoated, black
Rotor: Steel, 2 coat paint, ultramarine blue
Conformity: ErP 2015, CE
ErP-data
Efficiency η_{statA}: 57.1 %
Efficiency: N_{actual} = 65.9 / N_{target} = 40**
EC controller integrated
* Rated data
**ErP 2015

Connection diagram Page 529
1360-384

System components Page 430

Dimensions mm

Airflow direction

Design L - ZAplus Ontop, guard grille suction side

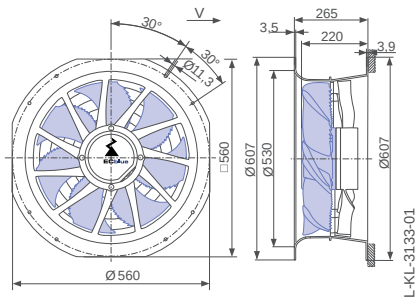

Airflow direction

Design L - ZAplus Ontop without guard grille

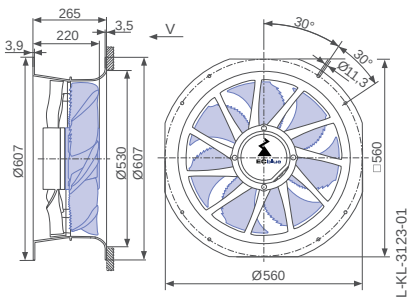

Design L - ZAplus Ontop, guard grille pressure side

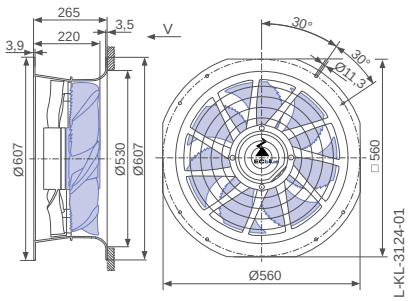

Performance data

Type	Characteristic curve	Speed n min⁻¹	Operating point	Current I A	Input power P_{sys} W	Suction side sound power level L_{WA5} dB(A)
ZN045-6I_.BD._7P2	I	1470	①	2.50	580	
			②	1.80	420	79
			③	1.20	270	76
	II	1180	④	1.35	310	
			⑤	0.94	210	72
			⑥	0.64	140	70
	III	880	⑦	0.58	130	
			⑧	0.44	95	64
			⑨	0.32	65	63
	IV	590	⑩	0.24	46	
			⑪	0.20	34	52
			⑫	0.17	26	52

Current values determined at 230V

Fan ordering information

Airflow direction | Airflow direction

Design	L (guard grille suction side) Ontop	L (without guard grille) Ontop	L (guard grille pressure side) Ontop	Q (without guard grille)	Q (guard grille pressure side)	H (guard grille pressure side) Flattop
	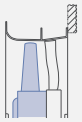					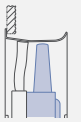
Type **Article no.**	**ZN045-6IL.BD.V7P2** **166918**	**ZN045-6IL.BD.V7P2** **166794**	**ZN045-6IL.BD.V7P2** **166795**	**ZN045-6IQ.BD.V7P2** **166797**	**ZN045-6IQ.BD.V7P2** **166798**	**ZN045-6IH.BD.V7P2** **166802**
Weight kg	10.50	8.20	8.90	9.00	9.60	8.90

ZAplus attachable on both sides.

Control technology

Control modules



Page 452

Design Q - ZAplus with adapter plate, without guard grille

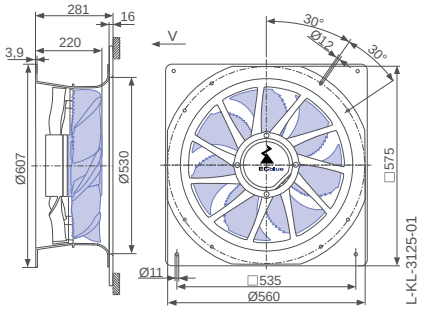

Design Q - ZAplus with adapter plate, guard grille pressure side

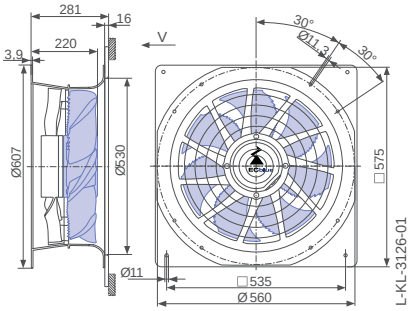

Design H - ZAplus Flattop, guard grille pressure side

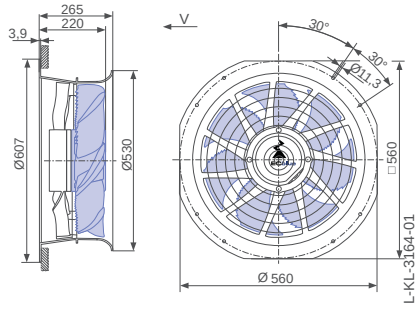

FE2owlet-ECblue with ZAplus

for single phase alternating current, 200-277 V

ZN045



Description

Motor technology: EC
Rated voltage U_N: **1~ 200-277 V***
Rated frequency f_N: **50/60 Hz***
Input power P_{sys}: **210 W***
Rated current I_N: **1.05- 0.78 A***
Rated speed n_N: **1100 min^{-1}***
Thermal class: **THCL155***
Min. permitted ambient temperature $t_{R(min)}$: -35 °C
Max. permitted ambient temperature $t_{R(max)}$: 60 °C
Electrical connection: integrated Controller
Number of blades: 7
Protection class: IP54
Motor protection: Integrated active temperature management
Blades: High Performance Composite Material, uncoated, black
Rotor: Steel, 2 coat paint, ultramarine blue
Conformity: ErP 2015, CE
ErP-data
Efficiency η_{statA}: 56.6 %
Efficiency: N_{actual} = 67.2 / N_{target} = 40**
EC controller integrated
* Rated data
**ErP 2015

Characteristic curve

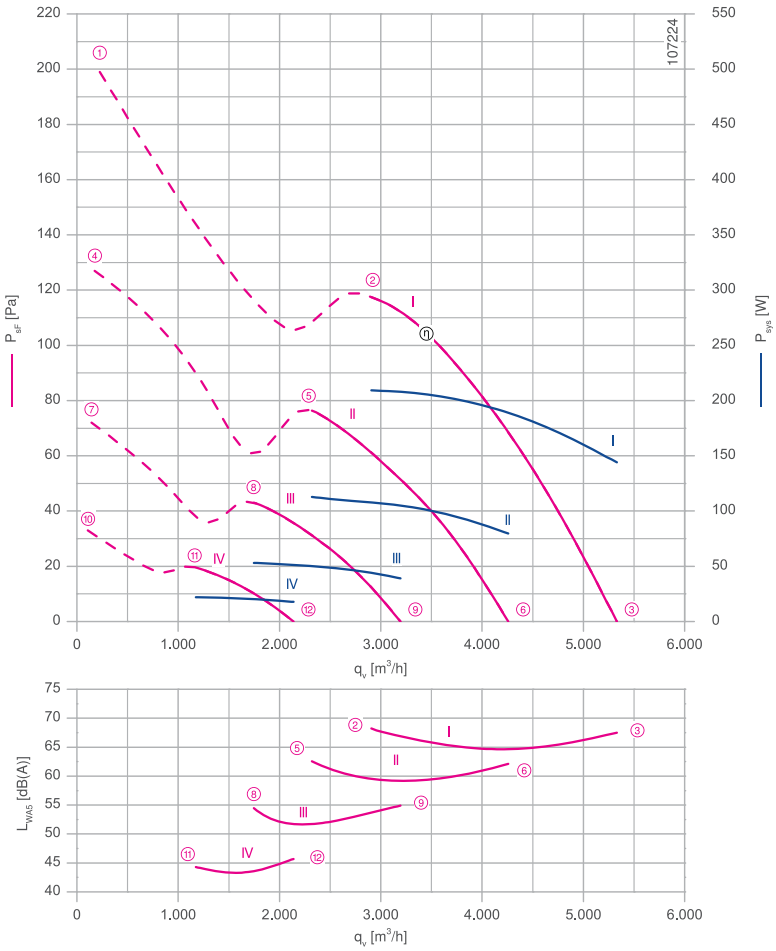

Measured in ZAplus without guard grille in installation type A according to ISO 5801

Connection diagram Page 529
1360-384

System components Page 430

Dimensions mm

Airflow direction

Design L - ZAplus Ontop, guard grille suction side

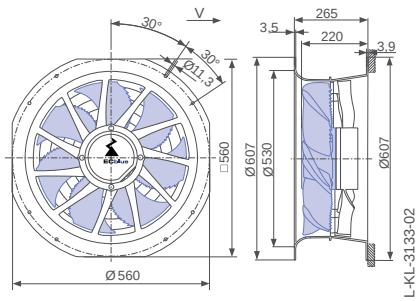

Airflow direction

Design L - ZAplus Ontop without guard grille

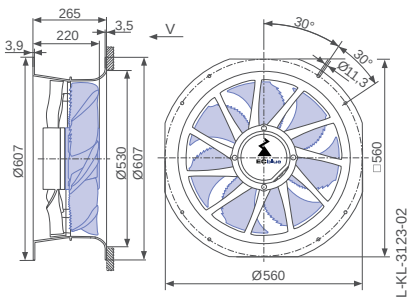

Design L - ZAplus Ontop, guard grille pressure side

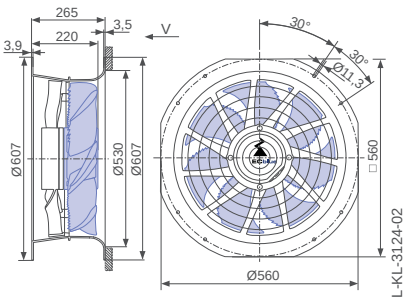

Performance data

Type	Characteristic curve	Speed n min⁻¹	Operating point	Current I A	Input power P_{sys} W	Suction side sound power level L_{WA5} dB(A)
ZN045-6I_.BD._7P3	I	1100	①	1.35	300	
			②	0.92	210	69
			③	0.64	140	68
	II	880	④	0.70	160	
			⑤	0.50	110	63
			⑥	0.38	80	62
	III	660	⑦	0.34	70	
			⑧	0.27	55	55
			⑨	0.22	40	55
	IV	440	⑩	0.18	28	
			⑪	0.16	22	44
			⑫	0.16	18	46

Current values determined at 230V

Fan ordering information

Airflow direction → Airflow direction

Design	L (guard grille suction side) Ontop	L (without guard grille) Ontop	L (guard grille pressure side) Ontop	Q (without guard grille)	Q (guard grille pressure side)	H (guard grille pressure side) Flattop
	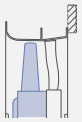					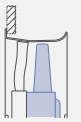
Type	**ZN045-6IL.BD.V7P3**	**ZN045-6IL.BD.V7P3**	**ZN045-6IL.BD.V7P3**	**ZN045-6IQ.BD.V7P3**	**ZN045-6IQ.BD.V7P3**	**ZN045-6IH.BD.V7P3**
Article no.	**166919**	**166812**	**166813**	**166815**	**166816**	**166820**
Weight kg	10.50	8.30	8.90	9.00	9.70	8.70

ZAplus attachable on both sides.

Control technology

Control modules



Page 452

Design Q - ZAplus with adapter plate, without guard grille

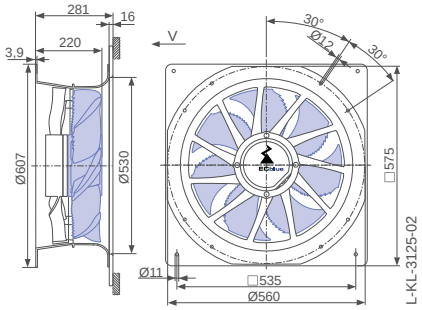

Design Q - ZAplus with adapter plate, guard grille pressure side

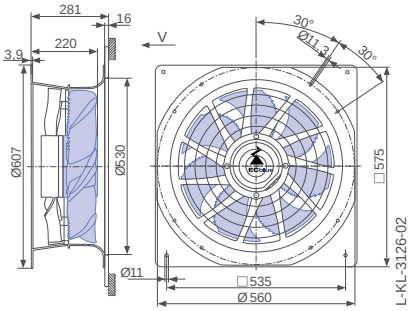

Design H - ZAplus Flattop, guard grille pressure side

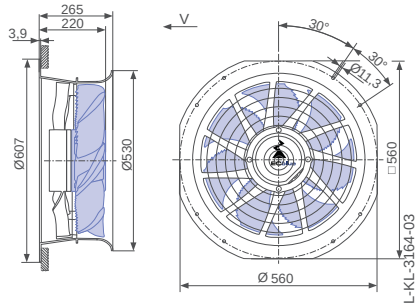

FE2owlet-ECblue with ZAplus

for single phase alternating current, 200-277 V

ZN050



Characteristic curve

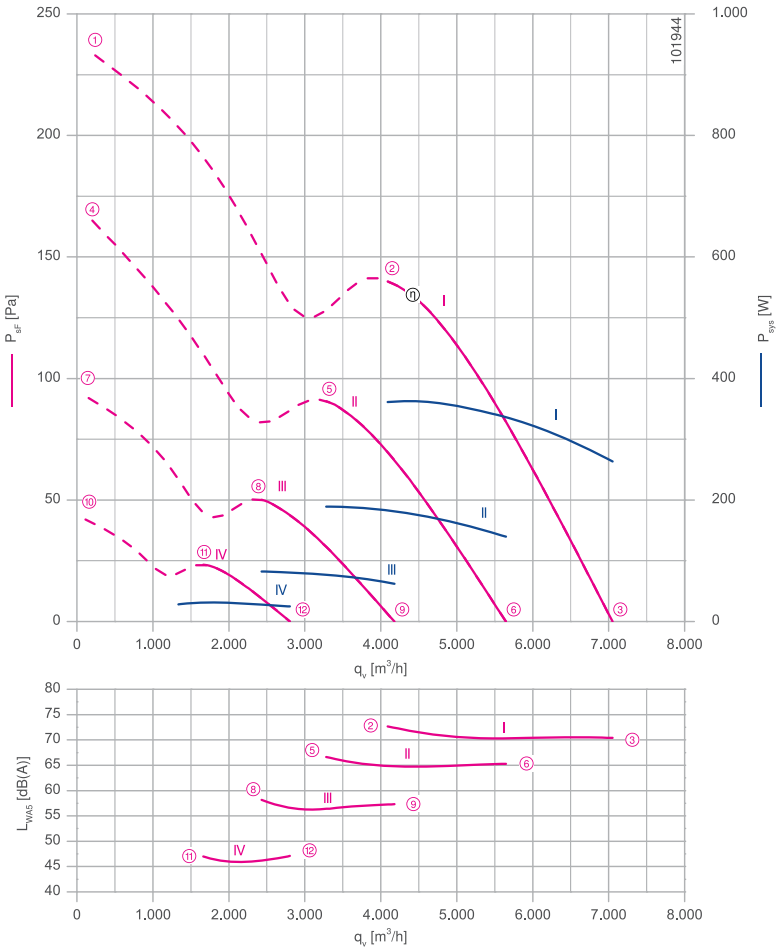

Measured in ZAplus without guard grille in installation type A according to ISO 5801

Description

Motor technology: EC
Rated voltage U_N: **1~ 200-277 V***
Rated frequency f_N: **50/60 Hz***
Input power P_{sys}: **360 W***
Rated current I_N: **1.85- 1.30 A***
Rated speed n_N: **1120 min^{-1}***
Thermal class: **THCL155***
Min. permitted ambient temperature $t_{R(min)}$: -35 °C
Max. permitted ambient temperature $t_{R(max)}$: 60 °C
Electrical connection: integrated Controller
Number of blades: 7
Protection class: IP54
Motor protection: Integrated active temperature management
Blades: High Performance Composite Material, uncoated, black
Rotor: Steel, 2 coat paint, ultramarine blue
Conformity: ErP 2015, CE
ErP-data
Efficiency η_{statA}: 52.0 %
Efficiency: N_{actual} = 61.2 / N_{target} = 40**
EC controller integrated
* Rated data
**ErP 2015

Connection diagram Page 529
1360-384

System components Page 430

Dimensions mm

Airflow direction

Design L - ZAplus Ontop, guard grille suction side

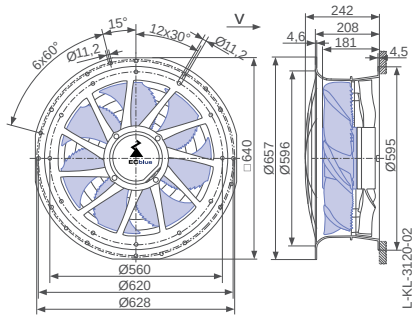

Airflow direction

Design L - ZAplus Ontop without guard grille

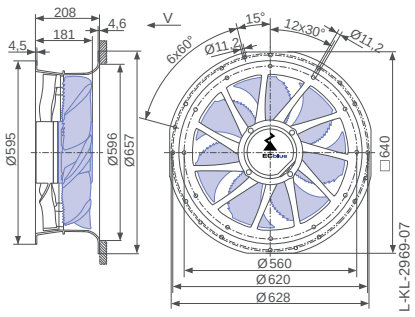

Design L - ZAplus Ontop, guard grille pressure side

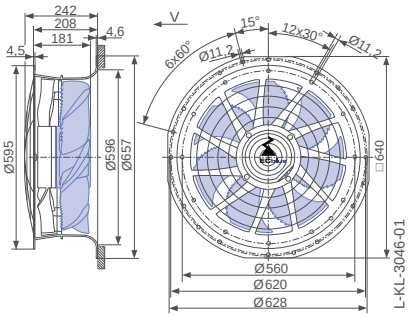

Performance data

Type	Characteristic curve	Speed n min⁻¹	Operating point	Current I A	Input power P_{sys} W	Suction side sound power level L_{WA5} dB(A)
ZN050-6I_.BD.V7P2	I	1120	①	2.10	480	
			②	1.55	360	73
			③	1.15	260	70
	II	900	④	1.20	270	
			⑤	0.84	190	67
			⑥	0.62	140	65
	III	670	⑦	0.52	110	
			⑧	0.38	80	58
			⑨	0.30	60	57
	IV	450	⑩	0.23	40	
			⑪	0.19	30	47
			⑫	0.17	24	47

Current values determined at 230V

Fan ordering information

Airflow direction → Airflow direction

Design	L (guard grille suction side) Ontop	L (without guard grille) Ontop	L (guard grille pressure side) Ontop	Q (guard grille pressure side)	H (guard grille pressure side) Flattop
	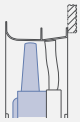				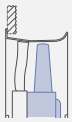
Type **Article no.**	**ZN050-6IL.BD.V7P2** **165325**	**ZN050-6IL.BD.V7P2** **162262**	**ZN050-6IL.BD.V7P2** **162263**	**ZN050-6IQ.BD.V7P2** **162265**	**ZN050-6IH.BD.V7P2** **162267**
Weight kg	12.40	11.00	12.30	13.50	11.50

ZAplus attachable on both sides.

Control technology

Control modules



Page 452

Design Q - ZAplus with adapter plate, guard grille pressure side

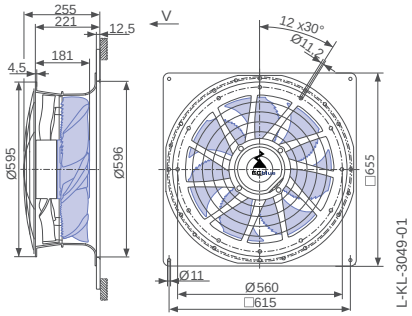

Design H - ZAplus Flattop, guard grille pressure side

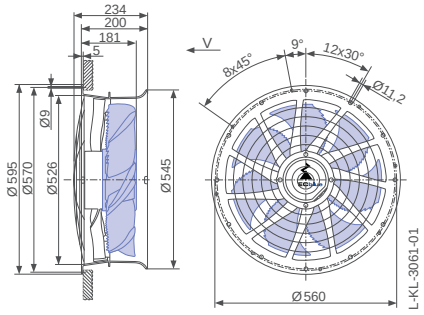

FE2owlet-ECblue with ZAplus

for single phase alternating current, 200-277 V

ZN050



Characteristic curve

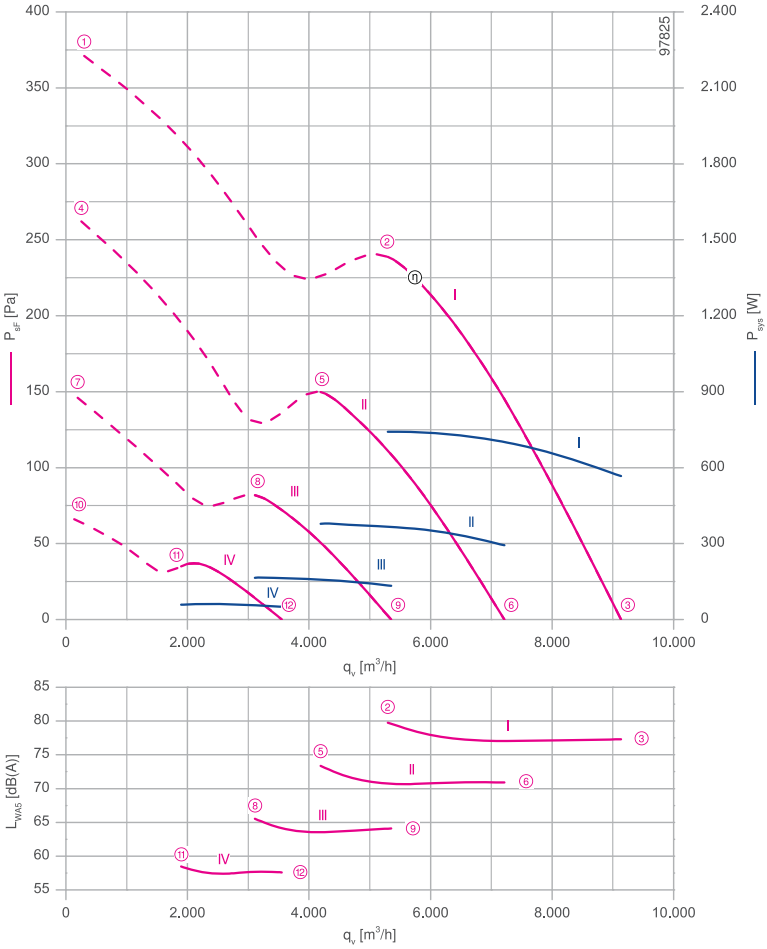

Measured in ZAplus without guard grille in installation type A according to ISO 5801

Description

Motor technology: EC
Rated voltage U_N: **1~ 200-277 V***
Rated frequency f_N: **50/60 Hz***
Input power P_{sys}: **0.74 kW***
Rated current I_N: **4.00- 2.90 A***
Rated speed n_N: **1440 min^{-1}***
Thermal class: **THCL155***
Min. permitted ambient temperature $t_{R(min)}$: -35 °C
Max. permitted ambient temperature $t_{R(max)}$: 60 °C
Electrical connection: integrated Controller
Number of blades: 7
Protection class: IP54
Motor protection: Integrated active temperature management
Blades: High Performance Composite Material, uncoated, black
Rotor: Steel, 2 coat paint, ultramarine blue
Conformity: ErP 2015, CE, UL
ErP-data
Efficiency η_{statA}: 54.5 %
Efficiency: N_{actual} = 61.7 / N_{target} = 40**
EC controller integrated
* Rated data
**ErP 2015

Connection diagram Page 530
1360-403

System components Page 430

Dimensions mm

Airflow direction

Design L - ZAplus Ontop, guard grille suction side

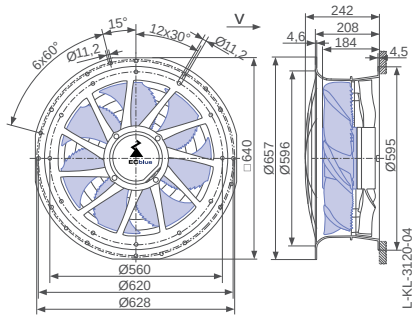

Airflow direction

Design L - ZAplus Ontop without guard grille

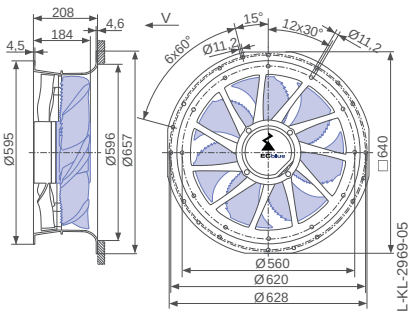

Design L - ZAplus Ontop, guard grille pressure side

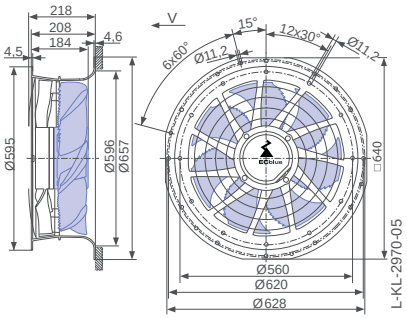

Performance data

Type	Characteristic curve	Speed n min⁻¹	Operating point	Current I A	Input power P_{sys} W	Suction side sound power level L_{WA5} dB(A)
ZN050-ZI_.DC.V7P2	I	1440	①	4.20	880	
			②	3.50	740	80
			③	2.70	560	77
	II	1150	④	2.60	520	
			⑤	1.85	380	73
			⑥	1.40	290	71
	III	860	⑦	1.05	230	
			⑧	0.76	160	66
			⑨	0.64	130	64
	IV	580	⑩	0.42	80	
			⑪	0.37	60	58
			⑫	0.33	50	58

Current values determined at 230V

Fan ordering information

Airflow direction → Airflow direction

Design	L (guard grille suction side) Ontop	L (without guard grille) Ontop	L (guard grille pressure side) Ontop	Q (without guard grille)	Q (guard grille pressure side)	H (guard grille pressure side) Flattop
	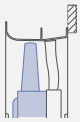					
Type **Article no.**	**ZN050-ZIL.DC.V7P2** **169872**	**ZN050-ZIL.DC.V7P2** **161736**	**ZN050-ZIL.DC.V7P2** **161738**	**ZN050-ZIQ.DC.V7P2** **161742**	**ZN050-ZIQ.DC.V7P2** **161744**	**ZN050-ZIH.DC.V7P2** **161748**
Weight kg	13.80	12.50	13.50	13.70	14.70	13.20

ZAplus attachable on both sides.

Control technology

Control modules	Sensor control modules	Add-on modules	Operating terminal
			
Page 452	Page 454	Page 463	Page 472

Design Q - ZAplus with adapter plate, without guard grille

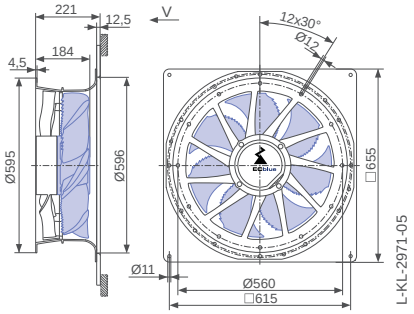

Design Q - ZAplus with adapter plate, guard grille pressure side

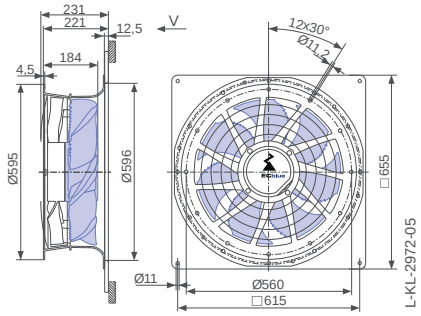

Design H - ZAplus Flattop, guard grille pressure side

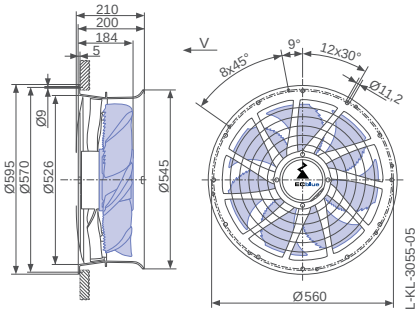

FE2owlet-ECblue with ZAplus

for three phase alternating current, 200-240 V

ZN050



Characteristic curve

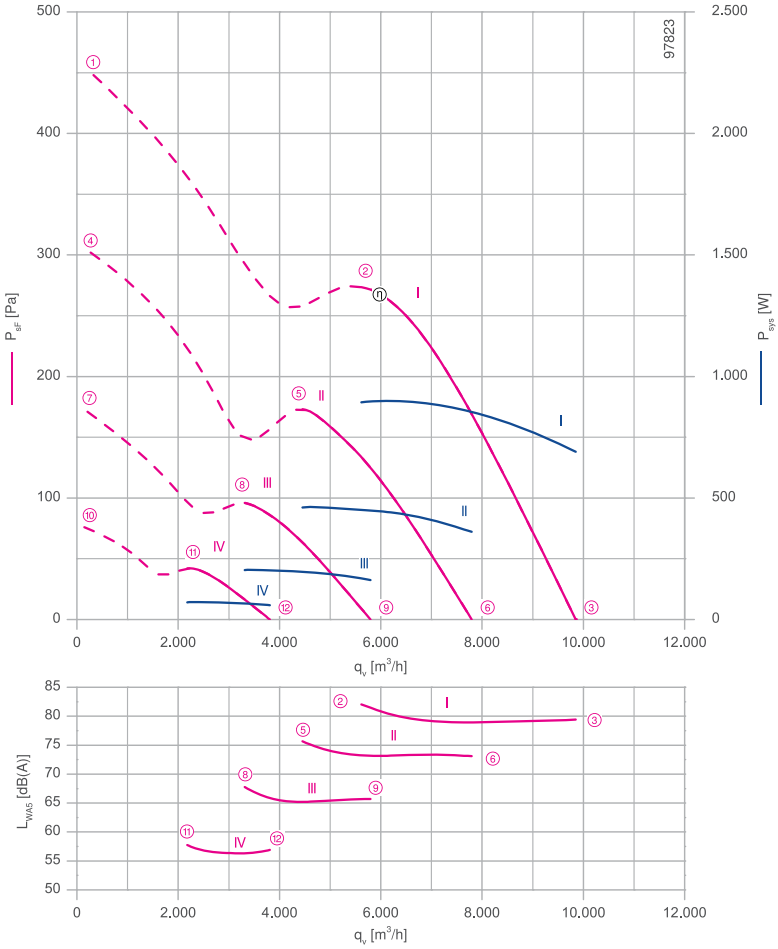

Measured in ZAplus without guard grille in installation type A according to ISO 5801

Description

Motor technology: EC
Rated voltage U_N: **3~ 200-240 V***
Rated frequency f_N: **50/60 Hz***
Input power P_{sys}: **0.90 kW***
Rated current I_N: **2.80- 2.30 A***
Rated speed n_N: **1550 min^{-1}***
Thermal class: **THCL155***
Min. permitted ambient temperature $t_{R(min)}$: -35 °C
Max. permitted ambient temperature $t_{R(max)}$: 60 °C
Electrical connection: integrated Controller
Number of blades: 7
Protection class: IP54
Motor protection: Integrated active temperature management
Blades: High Performance Composite Material, uncoated, black
Rotor: Steel, 2 coat paint, ultramarine blue
Conformity: ErP 2015, CE, UL
ErP-data
Efficiency η_{statA}: 55.4 %
Efficiency: N_{actual} = 62.0 / N_{target} = 40**
EC controller integrated
* Rated data
**ErP 2015

Connection diagram Page 530
1360-403

System components Page 430

Dimensions mm

Airflow direction

Design L - ZAplus Ontop, guard grille suction side

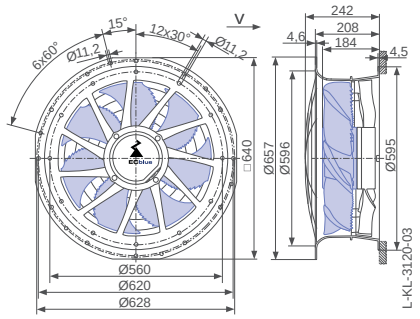

Airflow direction

Design L - ZAplus Ontop without guard grille

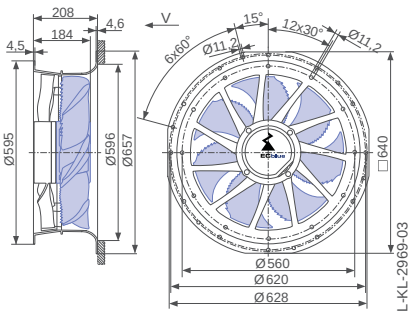

Design L - ZAplus Ontop, guard grille pressure side

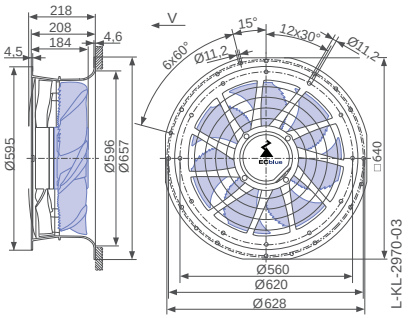

Performance data

Type	Characteristic curve	Speed n min⁻¹	Operating point	Current I A	Input power P_{sys} W	Suction side sound power level L_{WA5} dB(A)
ZN050-ZI_.DC.V7P2	I	1550	①	3.10	1150	
			②	2.40	900	81
			③	1.85	700	79
	II	1240	④	1.75	640	
			⑤	1.25	460	76
			⑥	1.00	360	73
	III	930	⑦	0.82	280	
			⑧	0.64	200	68
			⑨	0.54	160	66
	IV	620	⑩	0.39	95	
			⑪	0.33	70	58
			⑫	0.29	60	57

Current values determined at 230V

Fan ordering information

Airflow direction → Airflow direction

Design	L (guard grille suction side) Ontop	L (without guard grille) Ontop	L (guard grille pressure side) Ontop	Q (without guard grille)	Q (guard grille pressure side)	H (guard grille pressure side) Flattop
	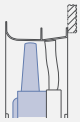					
Type **Article no.**	**ZN050-ZIL.DC.V7P2** **169871**	**ZN050-ZIL.DC.V7P2** **161722**	**ZN050-ZIL.DC.V7P2** **161724**	**ZN050-ZIQ.DC.V7P2** **161728**	**ZN050-ZIQ.DC.V7P2** **161730**	**ZN050-ZIH.DC.V7P2** **161734**
Weight kg	13.80	12.50	13.50	13.70	14.70	13.20

ZAplus attachable on both sides.

Control technology

Control modules	Sensor control modules	Add-on modules	Operating terminal
			
Page 452	Page 454	Page 463	Page 472

Design Q - ZAplus with adapter plate, without guard grille

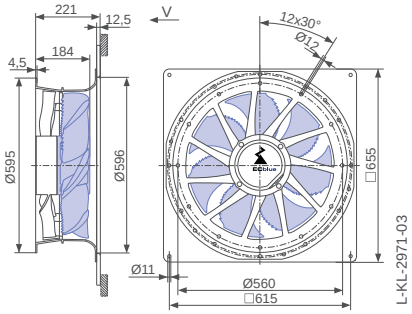

Design Q - ZAplus with adapter plate, guard grille pressure side

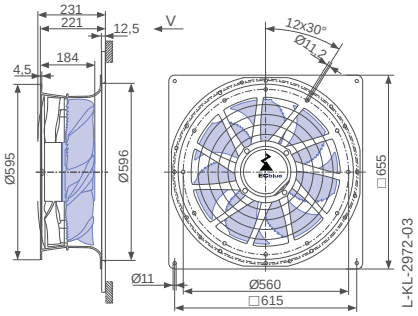

Design H - ZAplus Flattop, guard grille pressure side

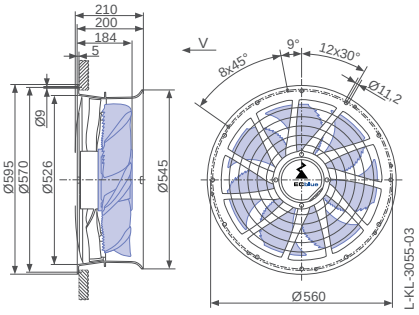

FE2owlet-ECblue with ZAplus

for three phase alternating current, 380-480 V

ZN050



Characteristic curve

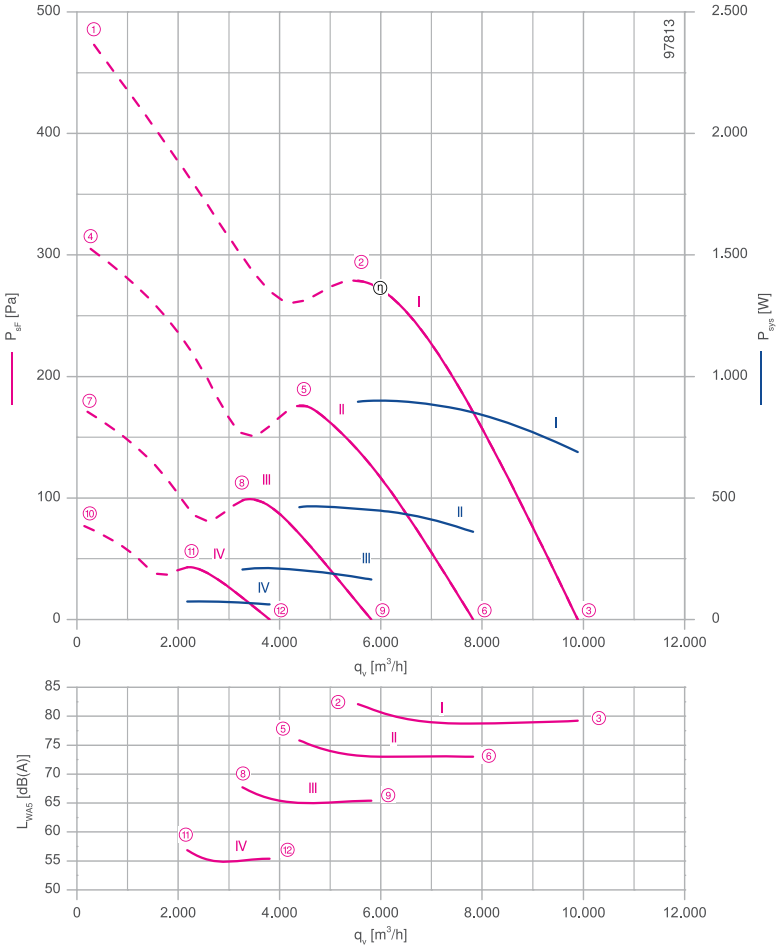

Measured in ZAplus without guard grille in installation type A according to ISO 5801

Description

Motor technology: EC
Rated voltage U_N: **3~ 380-480 V***
Rated frequency f_N: **50/60 Hz***
Input power P_{sys}: **0.90 kW***
Rated current I_N: **1.55- 1.25 A***
Rated speed n_N: **1550 min^{-1}***
Thermal class: **THCL155***
Min. permitted ambient temperature $t_{R(min)}$: -35 °C
Max. permitted ambient temperature $t_{R(max)}$: 60 °C
Electrical connection: integrated Controller
Number of blades: 7
Protection class: IP54
Motor protection: Integrated active temperature management
Blades: High Performance Composite Material, uncoated, black
Rotor: Steel, 2 coat paint, ultramarine blue
Conformity: ErP 2015, CE, UL
ErP-data
Efficiency η_{statA}: 56.3 %
Efficiency: N_{actual} = 62.9 / N_{target} = 40**
EC controller integrated
* Rated data
**ErP 2015

Connection diagram Page 530
1360-403

System components Page 430

Dimensions mm

Airflow direction

Design L - ZAplus Ontop, guard grille suction side

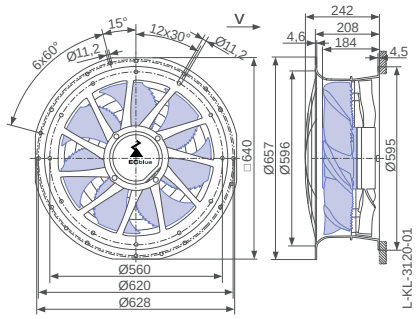

Airflow direction

Design L - ZAplus Ontop without guard grille

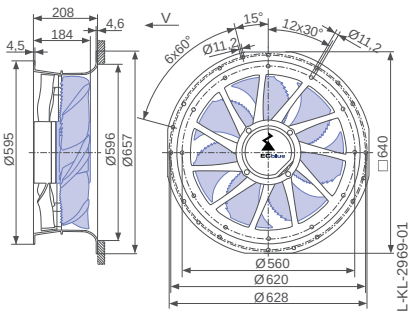

Design L - ZAplus Ontop, guard grille pressure side

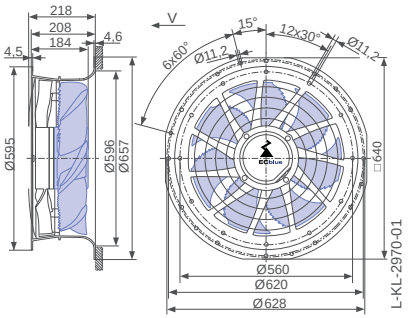

Performance data

Type	Characteristic curve	Speed n min⁻¹	Operating point	Current I A	Input power P_{sys} W	Suction side sound power level L_{WA5} dB(A)
ZN050-ZI_.DC.V7P2	I	1550	①	1.95	1250	
			②	1.45	900	82
			③	1.20	680	79
	II	1240	④	1.15	640	
			⑤	0.90	460	76
			⑥	0.76	360	73
	III	930	⑦	0.64	280	
			⑧	0.54	210	68
			⑨	0.46	160	65
	IV	620	⑩	0.34	95	
			⑪	0.29	75	57
			⑫	0.26	60	55

Current values determined at 400V

Fan ordering information

Airflow direction | Airflow direction

Design	L (guard grille suction side) Ontop	L (without guard grille) Ontop	L (guard grille pressure side) Ontop	Q (without guard grille)	Q (guard grille pressure side)	H (guard grille pressure side) Flattop
	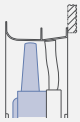					
Type **Article no.**	**ZN050-ZIL.DC.V7P2** **165326**	**ZN050-ZIL.DC.V7P2** **161708**	**ZN050-ZIL.DC.V7P2** **161710**	**ZN050-ZIQ.DC.V7P2** **161714**	**ZN050-ZIQ.DC.V7P2** **161716**	**ZN050-ZIH.DC.V7P2** **161720**
Weight kg	13.80	12.50	13.50	13.70	14.70	13.20

ZAplus attachable on both sides.

Control technology

Control modules	Sensor control modules	Add-on modules	Operating terminal
			
Page 452	Page 454	Page 463	Page 472

Design Q - ZAplus with adapter plate, without guard grille

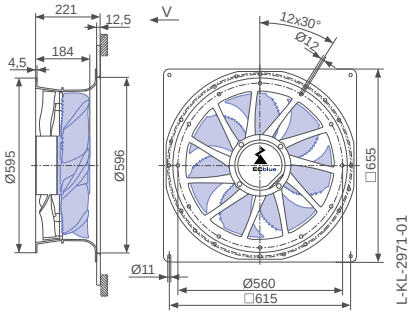

Design Q - ZAplus with adapter plate, guard grille pressure side

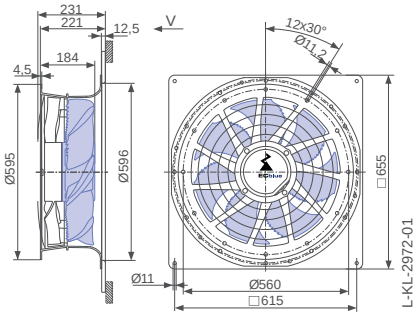

Design H - ZAplus Flattop, guard grille pressure side

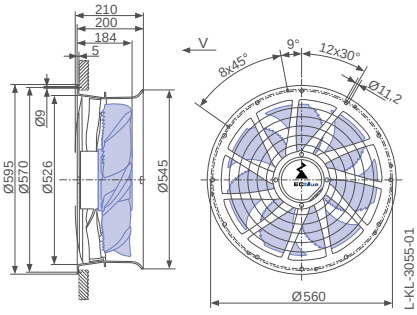

FE2owlet-ECblue with ZAplus

for single phase alternating current, 200-277 V

ZN063



Characteristic curve

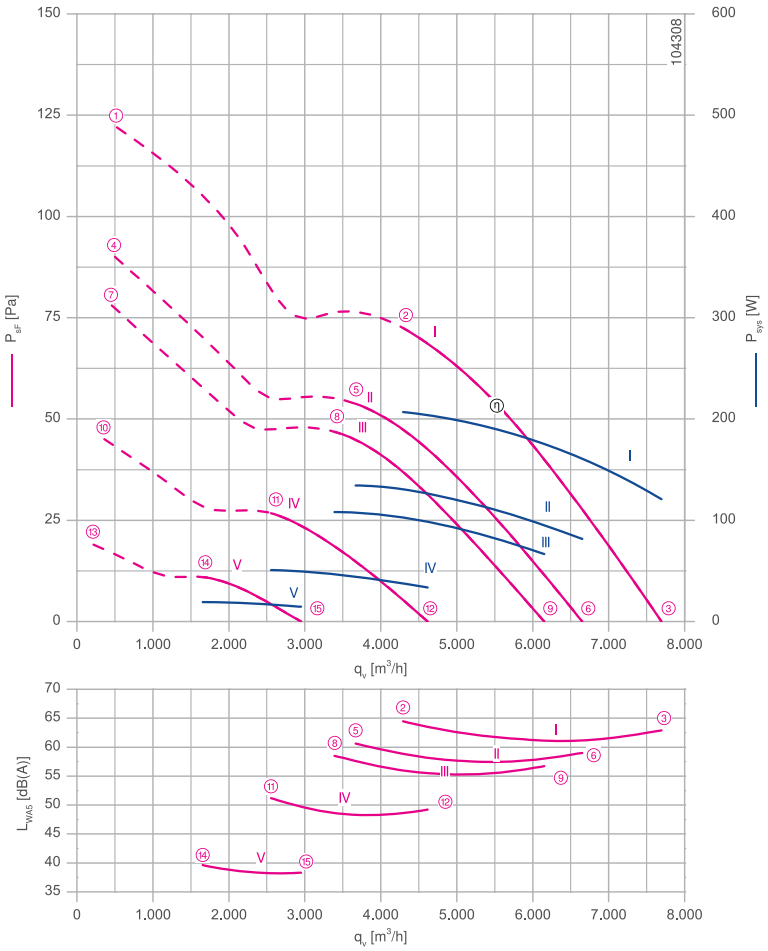

Measured in ZAplus without guard grille in installation type A according to ISO 5801

Description

Motor technology: EC
Rated voltage U_N: **1~ 200-277 V***
Rated frequency f_N: **50/60 Hz***
Input power P_{sys}: **210 W***
Rated current I_N: **1.05- 0.78 A***
Rated speed n_N: **660 min^{-1}***
Thermal class: **THCL155***
Min. permitted ambient temperature $t_{R(min)}$: -35 °C
Max. permitted ambient temperature $t_{R(max)}$: 55 °C
Electrical connection: integrated Controller
Number of blades: 7
Protection class: IP54
Motor protection: Integrated active temperature management
Blades: High Performance Composite Material, uncoated, black
Rotor: Steel, 2 coat paint, ultramarine blue
Conformity: ErP 2015, CE
ErP-data
Efficiency η_{statA}: 51.4 %
Efficiency: N_{actual} = 62.4 / N_{target} = 40**
EC controller integrated
* Rated data
**ErP 2015

Connection diagram Page 529
1360-384

System components Page 430

Dimensions mm

Airflow direction

Design L - ZAplus Ontop, guard grille suction side

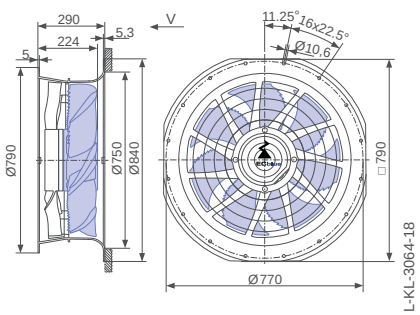

Airflow direction

Design L - ZAplus Ontop without guard grille

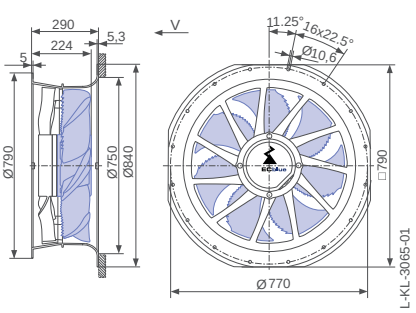

Design L - ZAplus Ontop, guard grille pressure side

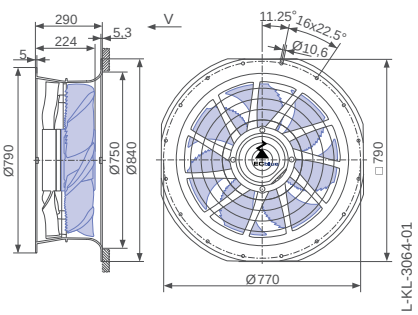

Performance data

Type	Characteristic curve	Speed n min⁻¹	Operating point	Current I A	Input power P_{sys} W	Suction side sound power level L_{WA5} dB(A)	Maximum ambient temperature t_R °C
ZN063-6I_.BD.V7P2	I	660	①	1.25	290		55
			②	0.92	210	65	
			③	0.54	120	63	
	II	570	④	0.80	180		60
			⑤	0.60	130	61	
			⑥	0.38	80	59	
	III	530	⑦	0.66	150		
			⑧	0.48	110	59	
			⑨	0.32	65	57	
	IV	400	⑩	0.33	70		
			⑪	0.26	50	51	
			⑫	0.20	34	49	
	V	260	⑬	0.17	24		
			⑭	0.15	19	40	
			⑮	0.14	15	38	

Current values determined at 230V

Fan ordering information

Airflow direction ➤ ◄ Airflow direction

Design	L (guard grille suction side) Ontop	L (without guard grille) Ontop	L (guard grille pressure side) Ontop	Q (guard grille pressure side)	H (guard grille pressure side) Flattop
	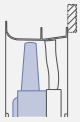	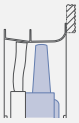	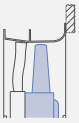	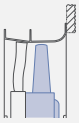	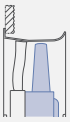
Type **Article no.**	**ZN063-6IL.BD.V7P2** **166779**	**ZN063-6IL.BD.V7P2** **163303**	**ZN063-6IL.BD.V7P2** **163304**	**ZN063-6IQ.BD.V7P2** **163307**	**ZN063-6IH.BD.V7P2** **163311**
Weight kg	17.30	15.50	16.50	18.60	16.90

ZAplus attachable on both sides.

Control technology

Control modules



Page 452

Design Q - ZAplus with adapter plate, guard grille pressure side

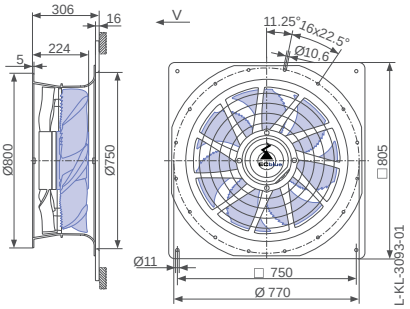

Design H - ZAplus Flattop, guard grille pressure side

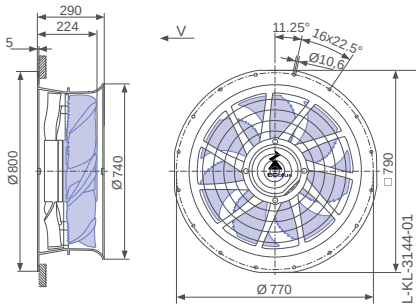

FE2owlet-ECblue with ZAplus

for single phase alternating current, 200-277 V

ZN063



Description

Motor technology: EC
Rated voltage U_N: **1~ 200-277 V***
Rated frequency f_N: **50/60 Hz***
Input power P_{sys}: **0.78 kW***
Rated current I_N: **4.00- 2.90 A***
Rated speed n_N: **1060 min^{-1}***
Thermal class: **THCL155***
Min. permitted ambient temperature $t_{R(min)}$: -35 °C
Max. permitted ambient temperature $t_{R(max)}$: 55 °C
Electrical connection: integrated Controller
Number of blades: 7
Protection class: IP54
Motor protection: Integrated active temperature management
Blades: High Performance Composite Material, uncoated, black
Rotor: Steel, 2 coat paint, ultramarine blue
Conformity: ErP 2015, CE, UL
ErP-data
Efficiency η_{statA}: 57.2 %
Efficiency: N_{actual} = 64.4 / N_{target} = 40**
EC controller integrated
* Rated data
**ErP 2015

Characteristic curve

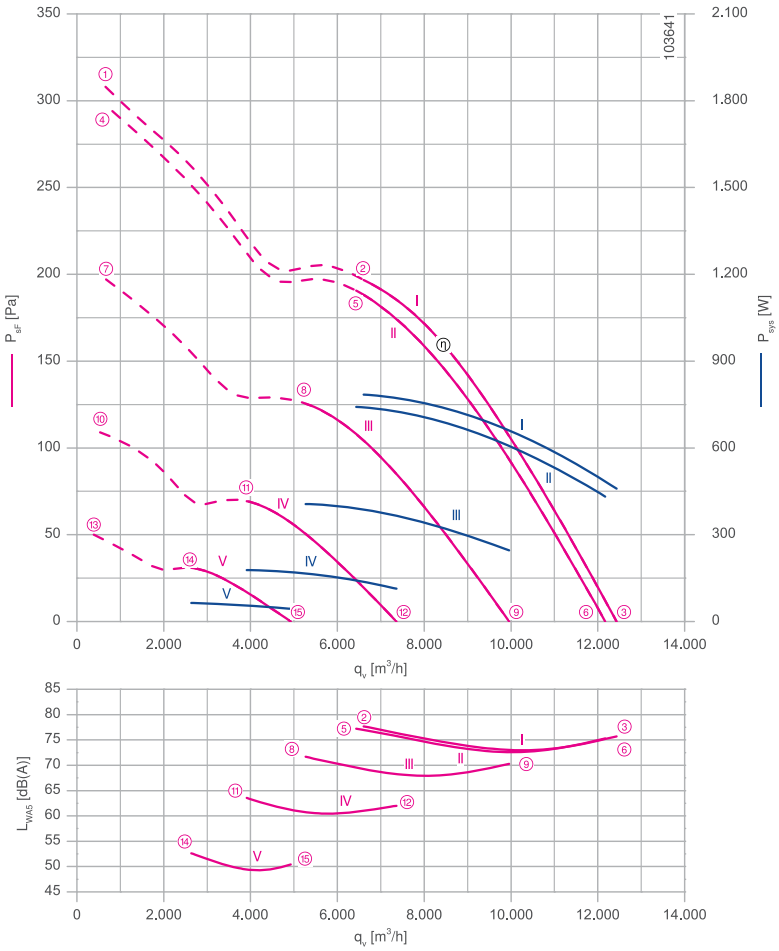

Measured in ZAplus without guard grille in installation type A according to ISO 5801

Connection diagram Page 530
1360-403

System components Page 430

Dimensions mm

Airflow direction

Design L - ZAplus Ontop, guard grille suction side

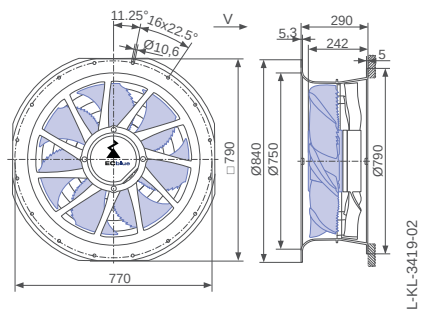

Airflow direction

Design L - ZAplus Ontop without guard grille

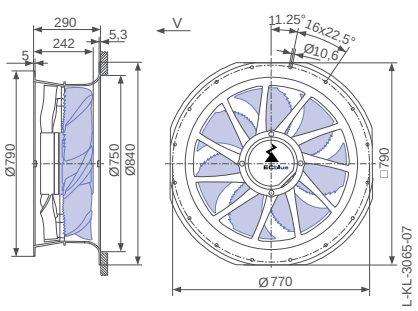

Design L - ZAplus Ontop, guard grille pressure side

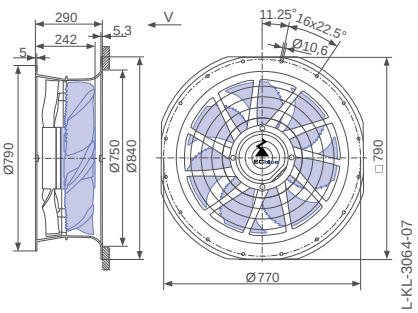

Performance data

Type	Characteristic curve	Speed n min⁻¹	Operating point	Current I A	Input power P_{sys} W	Suction side sound power level L_{WA5} dB(A)	Maximum ambient temperature t_R °C
ZN063-ZI_.DG.V7P2	I	1060	①	4.60	1000		55
			②	3.50	780	78	
			③	2.10	460	76	
	II	1040	④	4.20	960		60
			⑤	3.30	740	77	
			⑥	1.95	440	75	
	III	850	⑦	2.40	540		
			⑧	1.85	400	72	
			⑨	1.15	250	70	
	IV	630	⑩	1.05	230		
			⑪	0.82	180	64	
			⑫	0.54	110	62	
	V	420	⑬	0.42	80		
			⑭	0.54	65	53	
			⑮	0.46	44	50	

Current values determined at 230V

Fan ordering information

Airflow direction ▶ ◀ Airflow direction

Design	L (guard grille suction side) Ontop	L (without guard grille) Ontop	L (guard grille pressure side) Ontop	Q (without guard grille)	Q (guard grille pressure side)	H (guard grille pressure side) Flattop
	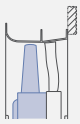	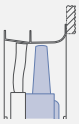	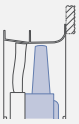	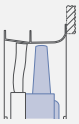	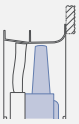	
Type **Article no.**	**ZN063-ZIL.DG.V7P2** **169880**	**ZN063-ZIL.DG.V7P2** **163357**	**ZN063-ZIL.DG.V7P2** **163358**	**ZN063-ZIQ.DG.V7P2** **163360**	**ZN063-ZIQ.DG.V7P2** **163361**	**ZN063-ZIH.DG.V7P2** **163365**
Weight kg	20.60	18.80	19.80	20.80	21.80	19.80

ZAplus attachable on both sides.

Control technology

Control modules	Sensor control modules	Add-on modules	Operating terminal
			
Page 452	Page 454	Page 463	Page 472

Design Q - ZAplus with adapter plate, without guard grille

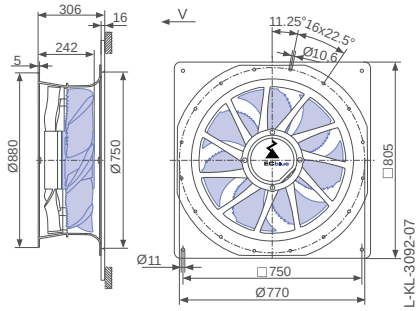

Design Q - ZAplus with adapter plate, guard grille pressure side

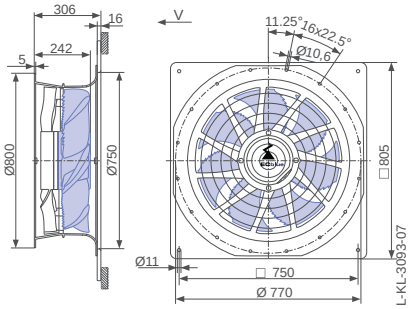

Design H - ZAplus Flattop, guard grille pressure side

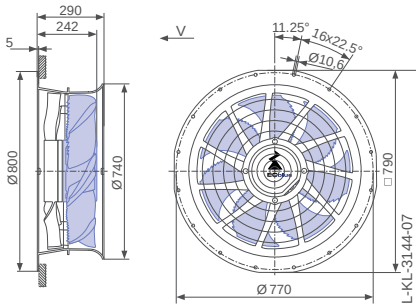

FE2owlet-ECblue with ZAplus

for three phase alternating current, 200-240 V

ZN063



Characteristic curve

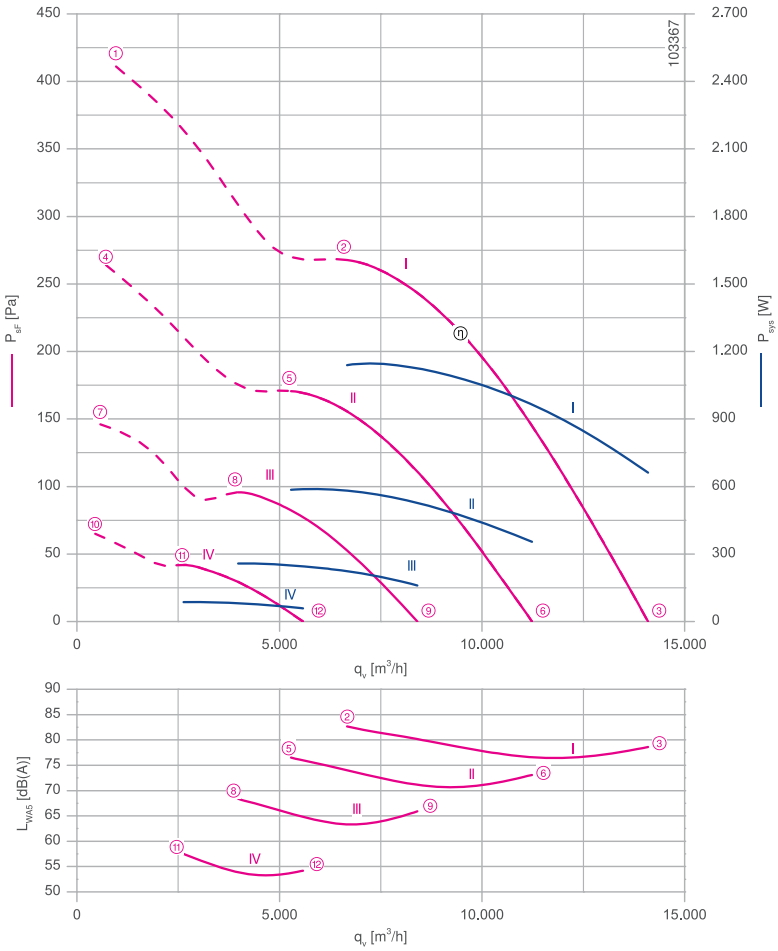

Measured in ZAplus without guard grille in installation type A according to ISO 5801

Description

Motor technology: EC
Rated voltage U_N: **3~ 200-240 V***
Rated frequency f_N: **50/60 Hz***
Input power P_{sys}: **1.00 kW***
Rated current I_N: **3.60- 3.00 A***
Rated speed n_N: **1200 min^{-1}***
Thermal class: **THCL155***
Min. permitted ambient temperature $t_{R(min)}$: -35 °C
Max. permitted ambient temperature $t_{R(max)}$: 60 °C
Electrical connection: integrated Controller
Number of blades: 7
Protection class: IP54
Motor protection: Integrated active temperature management
Blades: High Performance Composite Material, uncoated, black
Rotor: Steel, 2 coat paint, ultramarine blue
Conformity: ErP 2015, CE, UL
ErP-data
Efficiency η_{statA}: 58.2 %
Efficiency: N_{actual} = 64.3 / N_{target} = 40**
EC controller integrated
* Rated data
**ErP 2015

Connection diagram Page 530
1360-403

System components Page 430

Dimensions mm

Airflow direction

Design L - ZAplus Ontop, guard grille suction side

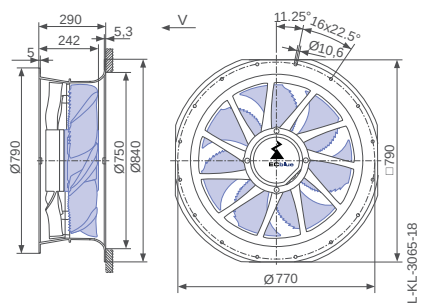

Airflow direction

Design L - ZAplus Ontop without guard grille

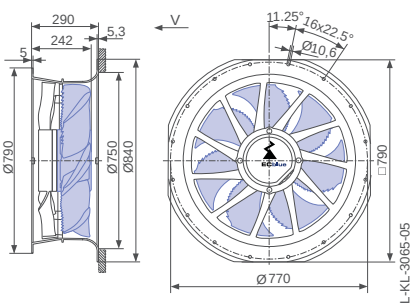

Design L - ZAplus Ontop, guard grille pressure side

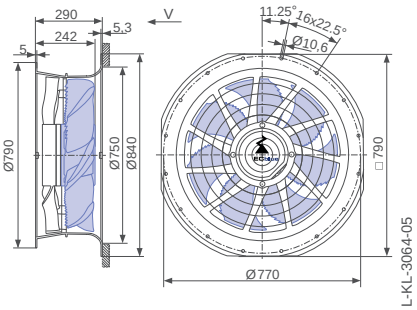

Performance data

Type	Characteristic curve	Speed n min⁻¹	Operating point	Current I A	Input power P_{sys} W	Suction side sound power level L_{WA5} dB(A)
ZN063-ZI_.DG.V7P2	I	1200	①	4.00	1500	
			②	3.10	1150	83
			③	1.85	660	79
	II	960	④	2.40	780	
			⑤	1.90	580	77
			⑥	1.20	350	73
	III	720	⑦	1.15	330	
			⑧	0.88	250	69
			⑨	0.60	160	66
	IV	480	⑩	0.46	110	
			⑪	0.39	85	58
			⑫	0.30	60	54

Current values determined at 230V

Fan ordering information

Airflow direction | Airflow direction

Design	L (guard grille suction side) Ontop	L (without guard grille) Ontop	L (guard grille pressure side) Ontop	Q (without guard grille)	Q (guard grille pressure side)	H (guard grille pressure side) Flattop
	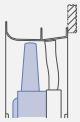					
Type **Article no.**	**ZN063-ZIL.DG.V7P2** **169879**	**ZN063-ZIL.DG.V7P2** **163339**	**ZN063-ZIL.DG.V7P2** **163340**	**ZN063-ZIQ.DG.V7P2** **163342**	**ZN063-ZIQ.DG.V7P2** **163343**	**ZN063-ZIH.DG.V7P2** **163347**
Weight kg	20.60	18.80	19.80	20.80	21.80	19.80

ZAplus attachable on both sides.

Control technology

Control modules	Sensor control modules	Add-on modules	Operating terminal
			
Page 452	Page 454	Page 463	Page 472

Design Q - ZAplus with adapter plate, without guard grille

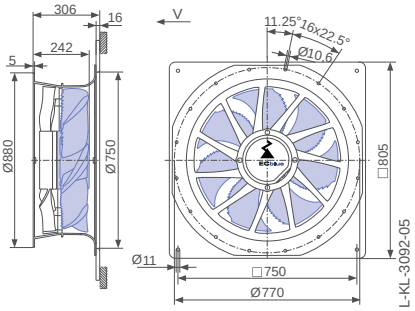

Design Q - ZAplus with adapter plate, guard grille pressure side

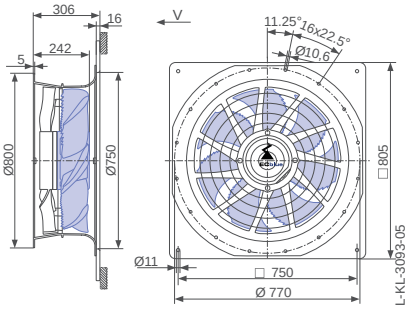

Design H - ZAplus Flattop, guard grille pressure side

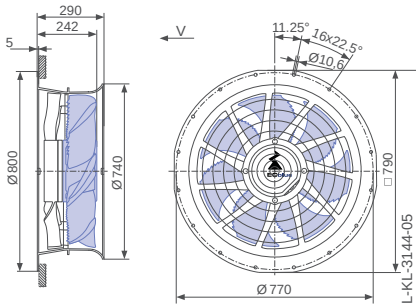

FE2owlet-ECblue with ZAplus

for three phase alternating current, 200-240 V

ZN063



Characteristic curve

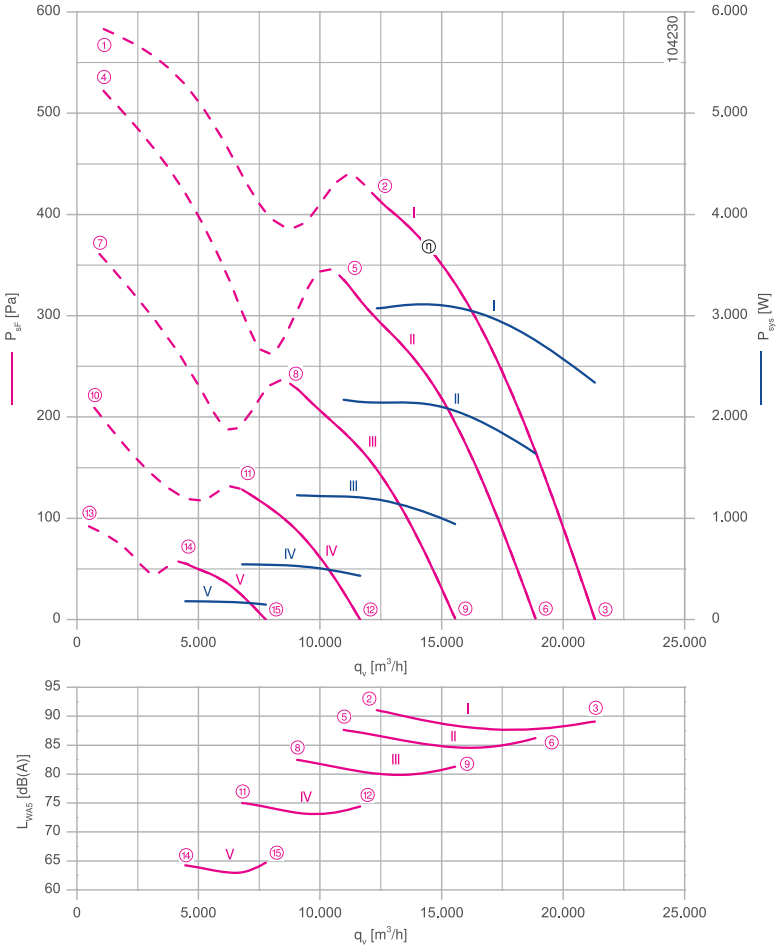

Measured in ZAplus without guard grille in installation type A according to ISO 5801

Description

Motor technology: EC
Rated voltage U_N: **3~ 200-240 V***
Rated frequency f_N: **50/60 Hz***
Input power P_{sys}: **3.10 kW***
Rated current I_N: **9.40- 8.00 A***
Rated speed n_N: **1500 min^{-1}***
Thermal class: **THCL155***
Min. permitted ambient temperature $t_{R(min)}$: -35 °C
Max. permitted ambient temperature $t_{R(max)}$: 45 °C
Electrical connection: integrated Controller
Number of blades: 7
Protection class: IP54
Motor protection: Integrated active temperature management
Blades: Aluminium, uncoated
Rotor: Steel, 2 coat paint, ultramarine blue
Conformity: ErP 2015, CE, UL
ErP-data
Efficiency η_{statA}: 51.2 %
Efficiency: N_{actual} = 54.4 / N_{target} = 40**
EC controller integrated
* Rated data
**ErP 2015

Connection diagram Page 530
1360-403

System components Page 430

Dimensions mm

Airflow direction

Design L - ZAplus Ontop, guard grille suction side

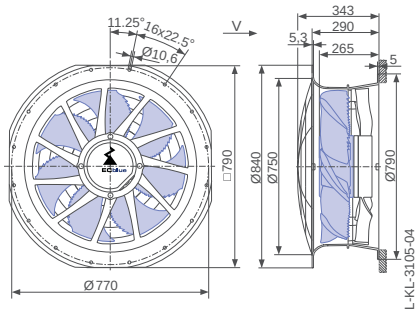

Airflow direction

Design L - ZAplus Ontop without guard grille

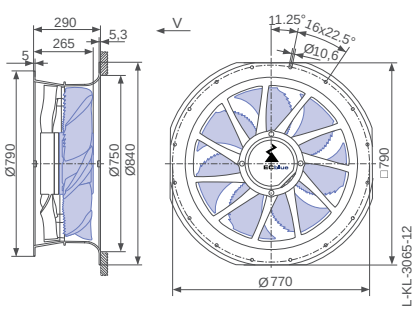

Design L - ZAplus Ontop, guard grille pressure side

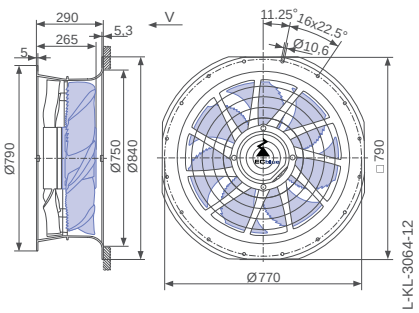

Performance data

Type	Characteristic curve	Speed n min⁻¹	Operating point	Current I A	Input power P_{sys} W	Suction side sound power level L_{WA5} dB(A)	Maximum ambient temperature t_R °C
ZN063-ZI_.GG.V7P3	I	1500	①	8.40	3200		45
			②	8.20	3100	91	
			③	6.20	2300	89	
	II	1340	④	7.00	2700		60
			⑤	5.60	2100	88	
			⑥	4.40	1650	86	
	III	1110	⑦	4.00	1500		
			⑧	3.30	1200	83	
			⑨	2.60	940	81	
	IV	830	⑩	1.90	680		
			⑪	1.55	540	75	
			⑫	1.25	440	74	
	V	550	⑬	0.74	220		
			⑭	0.62	180	64	
			⑮	0.54	150	65	

Current values determined at 230V

Fan ordering information

Airflow direction ▶ ◀ Airflow direction

Design	L (guard grille suction side) Ontop	L (without guard grille) Ontop	L (guard grille pressure side) Ontop	Q (without guard grille)	Q (guard grille pressure side)	H (guard grille pressure side) Flattop
	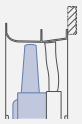		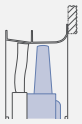	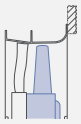	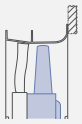	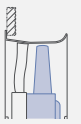
Type **Article no.**	**ZN063-ZIL.GG.V7P3** **169881**	**ZN063-ZIL.GG.V7P3** **164302**	**ZN063-ZIL.GG.V7P3** **164303**	**ZN063-ZIQ.GG.V7P3** **164305**	**ZN063-ZIQ.GG.V7P3** **164306**	**ZN063-ZIH.GG.V7P3** **164310**
Weight kg	33.40	31.40	32.50	32.80	33.80	32.50

ZAplus attachable on both sides.

Control technology

Control modules	Sensor control modules	Add-on modules	Operating terminal
			
Page 452	Page 454	Page 463	Page 472

Design Q - ZAplus with adapter plate, without guard grille

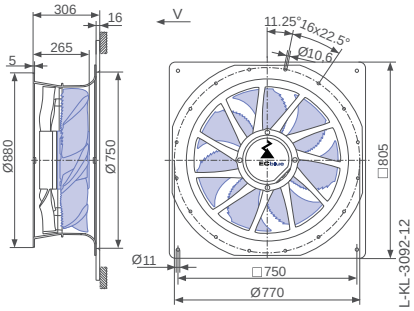

Design Q - ZAplus with adapter plate, guard grille pressure side

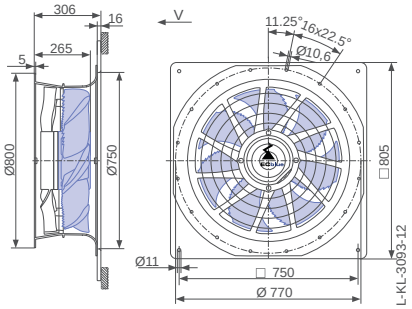

Design H - ZAplus Flattop, guard grille pressure side

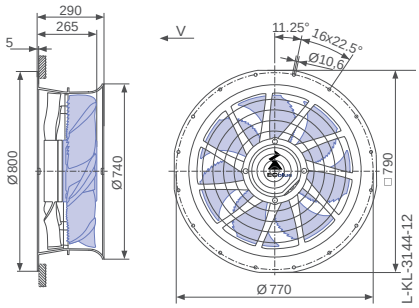

FE2owlet-ECblue with ZAplus

for three phase alternating current, 200-240 V

ZN063



Characteristic curve

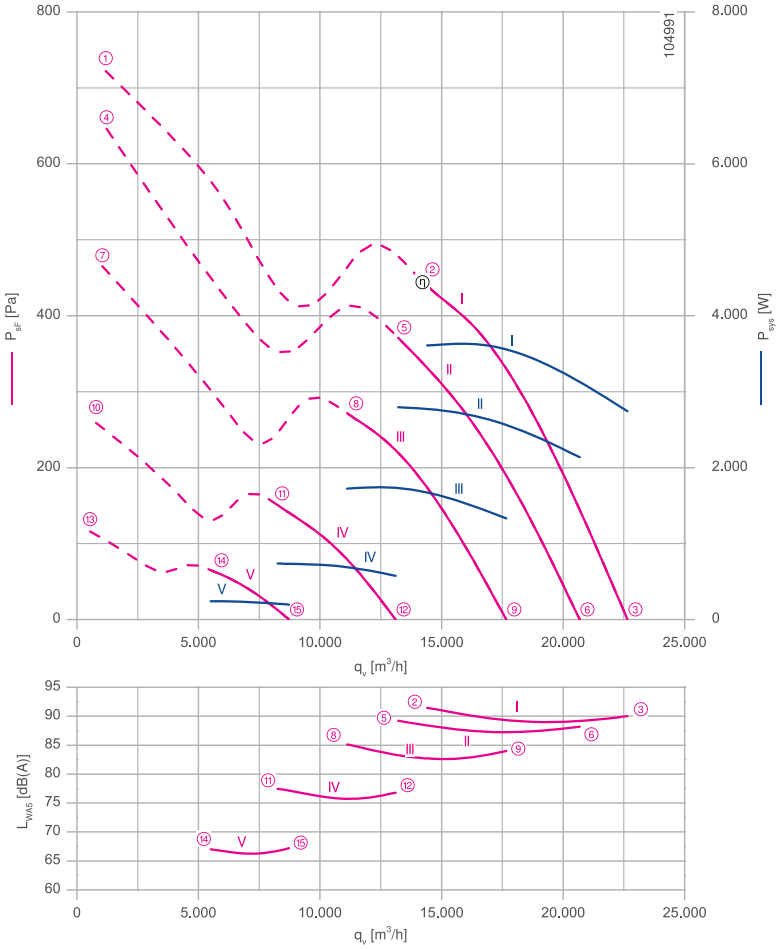

Measured in ZAplus without guard grille in installation type A according to ISO 5801

Description

Motor technology: EC
Rated voltage U_N: **3~ 200-240 V***
Rated frequency f_N: **50/60 Hz***
Input power P_{sys}: **3.60 kW***
Rated current I_N: **11.00- 9.20 A***
Rated speed n_N: **1600 min^{-1}***
Thermal class: **THCL155***
Min. permitted ambient temperature $t_{R(min)}$: -35 °C
Max. permitted ambient temperature $t_{R(max)}$: 50 °C
Electrical connection: integrated Controller
Number of blades: 7
Protection class: IP54
Motor protection: Integrated active temperature management
Blades: Aluminium, uncoated
Rotor: Steel, 2 coat paint, ultramarine blue
Conformity: ErP 2015, CE, UL
ErP-data
Efficiency η_{statA}: 52.4 %
Efficiency: N_{actual} = 55.2 / N_{target} = 40**
EC controller integrated
* Rated data
**ErP 2015

Connection diagram Page 530
1360-403

System components Page 430

Dimensions mm

Airflow direction

Design L - ZAplus Ontop, guard grille suction side

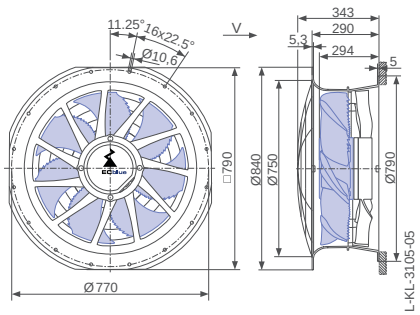

Airflow direction

Design L - ZAplus Ontop without guard grille

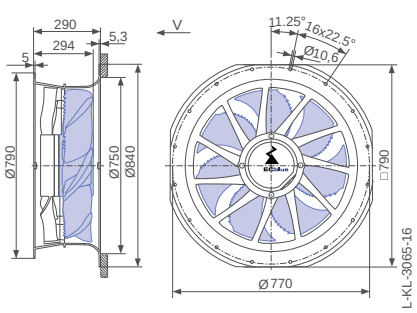

Design L - ZAplus Ontop, guard grille pressure side

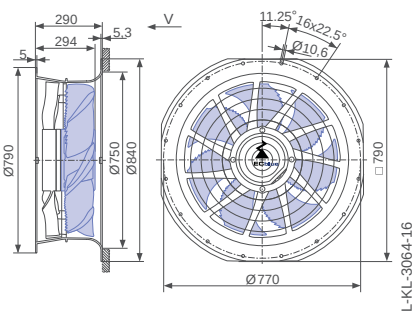

Performance data

Type	Characteristic curve	Speed n min⁻¹	Operating point	Current I A	Input power P_{sys} W	Suction side sound power level L_{WA5} dB(A)	Maximum ambient temperature t_R °C
ZN063-ZI_.GL.V7P3	I	1600	①	11.00	4200		50
			②	9.60	3600	92	
			③	7.20	2700	90	
	II	1470	④	9.40	3500		60
			⑤	7.40	2800	89	
			⑥	5.60	2100	88	
	III	1250	⑦	5.60	2100		
			⑧	4.60	1750	85	
			⑨	3.50	1350	84	
	IV	930	⑩	2.40	920		
			⑪	1.95	740	78	
			⑫	1.55	580	77	
	V	620	⑬	0.86	300		
			⑭	0.72	240	67	
			⑮	0.62	200	67	

Current values determined at 230V

Fan ordering information

Airflow direction ▶ ◀ Airflow direction

Design	L (guard grille suction side) Ontop	L (without guard grille) Ontop	L (guard grille pressure side) Ontop	Q (without guard grille)	Q (guard grille pressure side)	H (guard grille pressure side) Flattop
	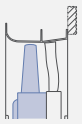	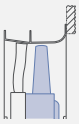	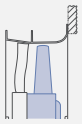	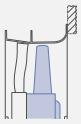	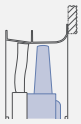	
Type Article no.	**ZN063-ZIL.GL.V7P3 169882**	**ZN063-ZIL.GL.V7P3 164337**	**ZN063-ZIL.GL.V7P3 164338**	**ZN063-ZIQ.GL.V7P3 164340**	**ZN063-ZIQ.GL.V7P3 164341**	**ZN063-ZIH.GL.V7P3 164345**
Weight kg	37.60	35.60	36.70	37.20	38.20	36.70

ZAplus attachable on both sides.

Control technology

Control modules	Sensor control modules	Add-on modules	Operating terminal
			
Page 452	Page 454	Page 463	Page 472

Design Q - ZAplus with adapter plate, without guard grille

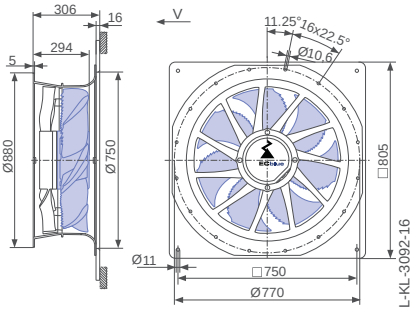

Design Q - ZAplus with adapter plate, guard grille pressure side

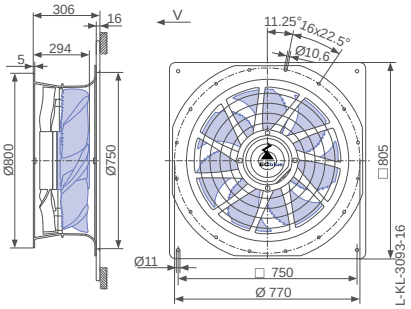

Design H - ZAplus Flattop, guard grille pressure side

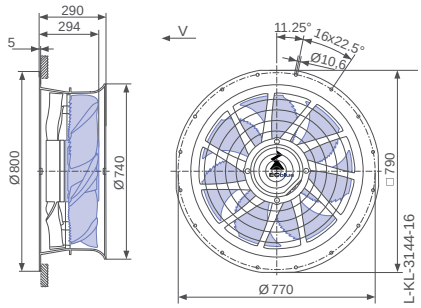

FE2owlet-ECblue with ZAplus

for three phase alternating current, 380-480 V

ZN063



Characteristic curve

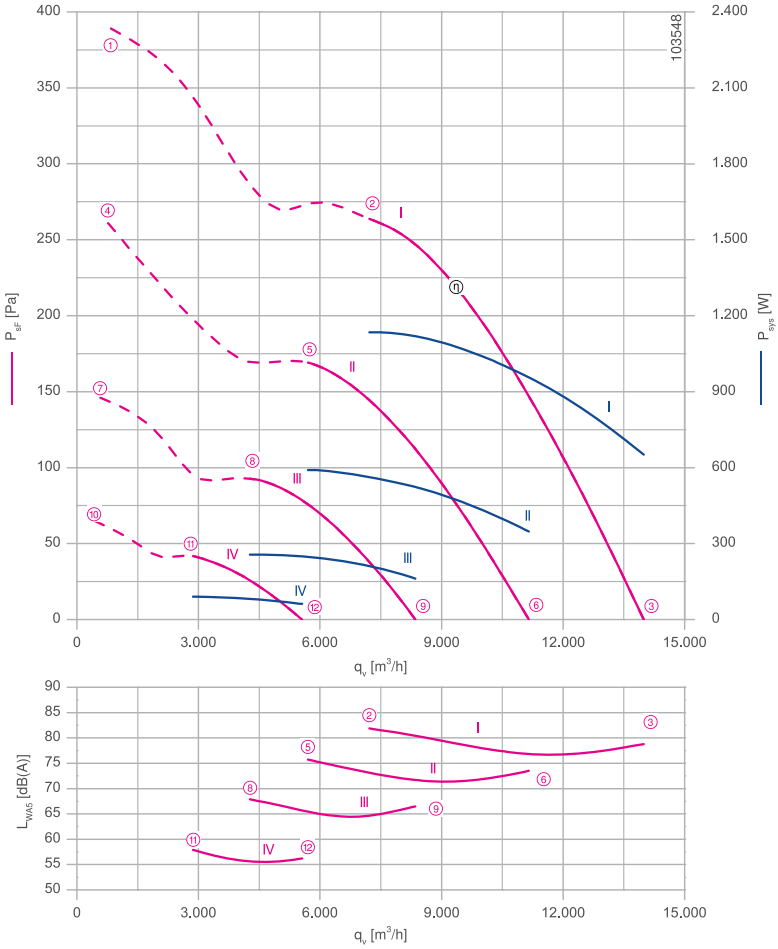

Measured in ZAplus without guard grille in installation type A according to ISO 5801

Description

Motor technology: EC
Rated voltage U_N: **3~ 380-480 V***
Rated frequency f_N: **50/60 Hz***
Input power P_{sys}: **1.00 kW***
Rated current I_N: **2.00- 1.60 A***
Rated speed n_N: **1200 min^{-1}***
Thermal class: **THCL155***
Min. permitted ambient temperature $t_{R(min)}$: -35 °C
Max. permitted ambient temperature $t_{R(max)}$: 60 °C
Electrical connection: integrated Controller
Number of blades: 7
Protection class: IP54
Motor protection: Integrated active temperature management
Blades: High Performance Composite Material, uncoated, black
Rotor: Steel, 2 coat paint, ultramarine blue
Conformity: ErP 2015, CE, UL
ErP-data
Efficiency η_{statA}: 58.7 %
Efficiency: N_{actual} = 64.8 / N_{target} = 40**
EC controller integrated
* Rated data
**ErP 2015

Connection diagram Page 530
1360-403

System components Page 430

Dimensions mm

Airflow direction

Design L - ZAplus Ontop, guard grille suction side

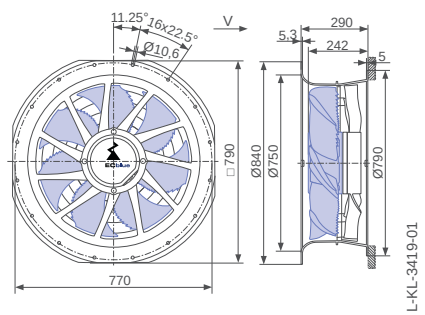

Airflow direction

Design L - ZAplus Ontop without guard grille

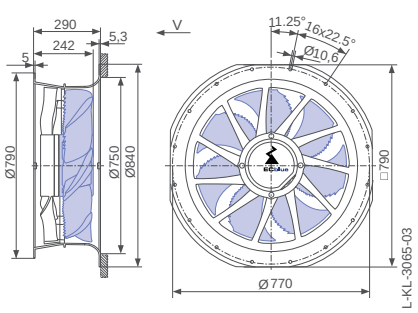

Design L - ZAplus Ontop, guard grille pressure side

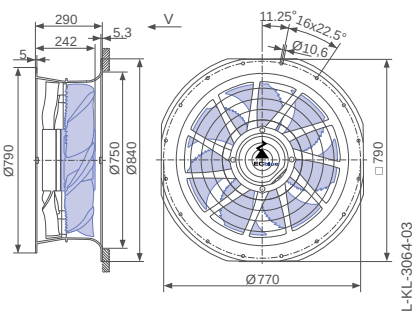

Performance data

Type	Characteristic curve	Speed n min⁻¹	Operating point	Current I A	Input power P_{sys} W	Suction side sound power level L_{WA5} dB(A)
ZN063-ZI_.DG.V7P2	I	1200	①	2.30	1400	
			②	1.90	1150	82
			③	1.25	660	79
	II	960	④	1.40	780	
			⑤	1.15	580	76
			⑥	0.84	350	74
	III	720	⑦	0.82	340	
			⑧	0.70	260	68
			⑨	0.54	160	67
	IV	480	⑩	0.42	110	
			⑪	0.37	90	58
			⑫	0.29	60	56

Current values determined at 400V

Fan ordering information

Airflow direction | Airflow direction

Design	L (guard grille suction side) Ontop	L (without guard grille) Ontop	L (guard grille pressure side) Ontop	Q (without guard grille)	Q (guard grille pressure side)	H (guard grille pressure side) Flattop
	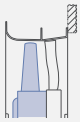					
Type **Article no.**	**ZN063-ZIL.DG.V7P2** **166780**	**ZN063-ZIL.DG.V7P2** **163321**	**ZN063-ZIL.DG.V7P2** **163322**	**ZN063-ZIQ.DG.V7P2** **163324**	**ZN063-ZIQ.DG.V7P2** **163325**	**ZN063-ZIH.DG.V7P2** **163329**
Weight kg	20.60	18.80	19.80	20.80	21.80	19.80

ZAplus attachable on both sides.

Control technology

Control modules	Sensor control modules	Add-on modules	Operating terminal
			
Page 452	Page 454	Page 463	Page 472

Design Q - ZAplus with adapter plate, without guard grille

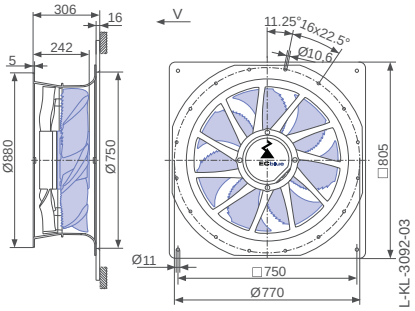

Design Q - ZAplus with adapter plate, guard grille pressure side

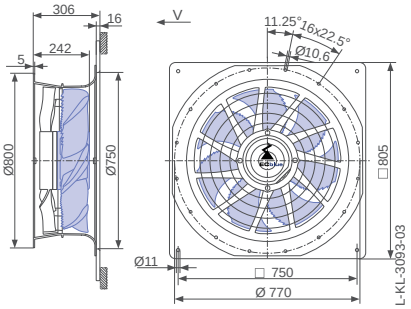

Design H - ZAplus Flattop, guard grille pressure side

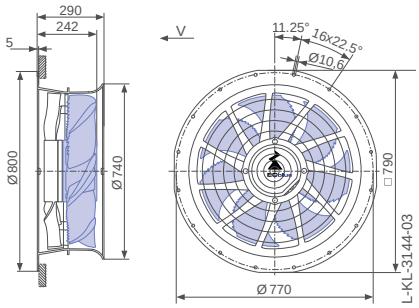

FE2owlet-ECblue with ZAplus

for three phase alternating current, 380-480 V

ZN063



Characteristic curve

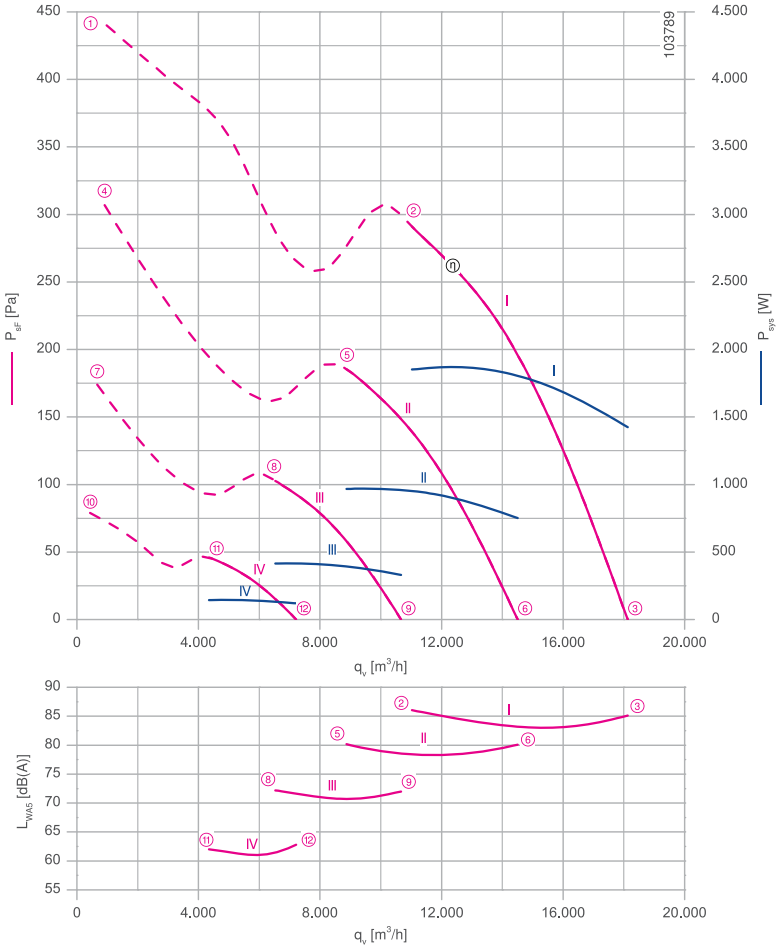

Measured in ZAplus without guard grille in installation type A according to ISO 5801

Description

Motor technology: EC
Rated voltage U_N: **3~ 380-480 V***
Rated frequency f_N: **50/60 Hz***
Input power P_{sys}: **1.85 kW***
Rated current I_N: **3.00- 2.40 A***
Rated speed n_N: **1270 min^{-1}***
Thermal class: **THCL155***
Min. permitted ambient temperature $t_{R(min)}$: -35 °C
Max. permitted ambient temperature $t_{R(max)}$: 65 °C
Electrical connection: integrated Controller
Number of blades: 7
Protection class: IP54
Motor protection: Integrated active temperature management
Blades: Aluminium, uncoated
Rotor: Steel, 2 coat paint, ultramarine blue
Conformity: ErP 2015, CE, UL
ErP-data
Efficiency η_{statA}: 52.8 %
Efficiency: N_{actual} = 57.5 / N_{target} = 40**
EC controller integrated
* Rated data
**ErP 2015

Connection diagram Page 530
1360-403

System components Page 430

Dimensions mm

Airflow direction

Design L - ZAplus Ontop, guard grille suction side

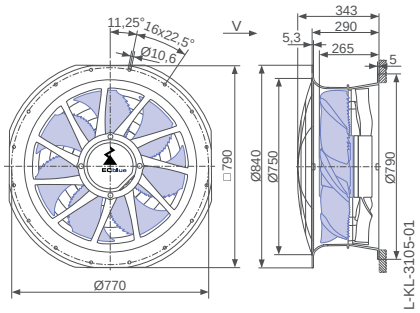

Airflow direction

Design L - ZAplus Ontop without guard grille

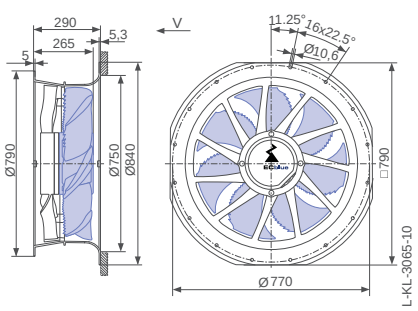

Design L - ZAplus Ontop, guard grille pressure side

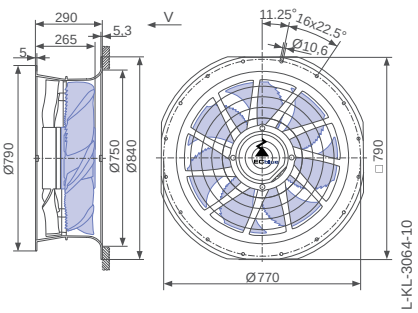

Performance data

Type	Characteristic curve	Speed n min⁻¹	Operating point	Current I A	Input power P_{sys} W	Suction side sound power level L_{WA5} dB(A)
ZN063-ZI_.GG.V7P3	I	1270	①	3.10	2000	
			②	2.90	1850	86
			③	2.20	1400	85
	II	1020	④	1.85	1200	
			⑤	1.55	960	80
			⑥	1.25	760	80
	III	760	⑦	0.94	520	
			⑧	0.80	420	72
			⑨	0.68	330	72
	IV	510	⑩	0.48	180	
			⑪	0.42	140	62
			⑫	0.38	120	63

Current values determined at 400V

Fan ordering information

Airflow direction | Airflow direction

Design	L (guard grille suction side) Ontop	L (without guard grille) Ontop	L (guard grille pressure side) Ontop	Q (without guard grille)	Q (guard grille pressure side)	H (guard grille pressure side) Flattop
	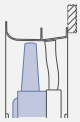					
Type **Article no.**	**ZN063-ZIL.GG.V7P3** **166781**	**ZN063-ZIL.GG.V7P3** **164284**	**ZN063-ZIL.GG.V7P3** **164285**	**ZN063-ZIQ.GG.V7P3** **164287**	**ZN063-ZIQ.GG.V7P3** **164288**	**ZN063-ZIH.GG.V7P3** **164292**
Weight kg	33.40	31.40	32.50	32.80	33.80	32.50

ZAplus attachable on both sides.

Control technology

Control modules	Sensor control modules	Add-on modules	Operating terminal
			
Page 452	Page 454	Page 463	Page 472

Design Q - ZAplus with adapter plate, without guard grille

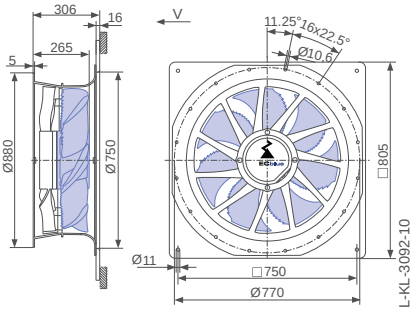

Design Q - ZAplus with adapter plate, guard grille pressure side

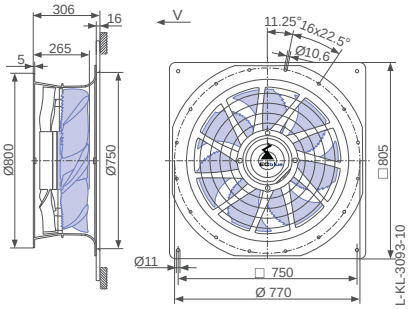

Design H - ZAplus Flattop, guard grille pressure side

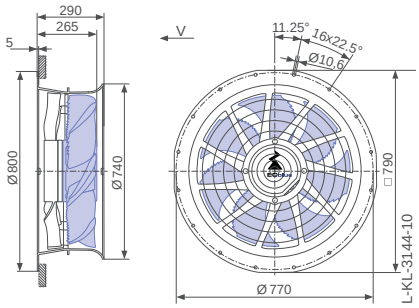

FE2owlet-ECblue with ZAplus

for three phase alternating current, 380-480 V

ZN063



Characteristic curve

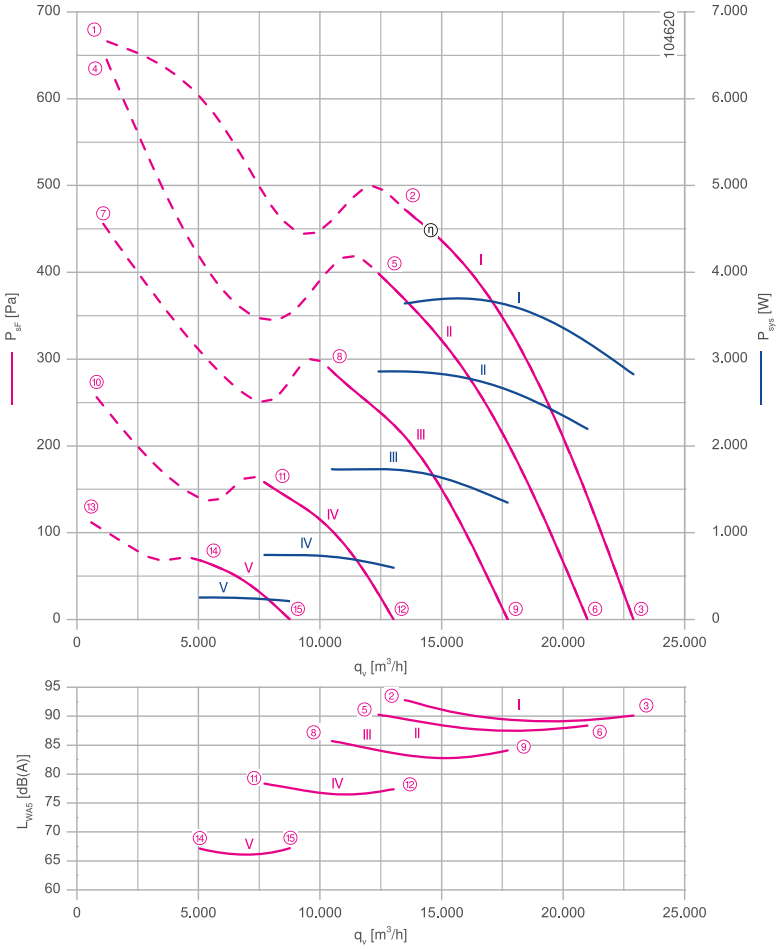

Measured in ZAplus without guard grille in installation type A according to ISO 5801

Description

Motor technology: EC
Rated voltage U_N: **3~ 380-480 V***
Rated frequency f_N: **50/60 Hz***
Input power P_{sys}: **3.70 kW***
Rated current I_N: **6.00- 4.70 A***
Rated speed n_N: **1600 min^{-1}***
Thermal class: **THCL155***
Min. permitted ambient temperature $t_{R(min)}$: -35 °C
Max. permitted ambient temperature $t_{R(max)}$: 55 °C
Electrical connection: integrated Controller
Number of blades: 7
Protection class: IP54
Motor protection: Integrated active temperature management
Blades: Aluminium, uncoated
Rotor: Steel, 2 coat paint, ultramarine blue
Conformity: ErP 2015, CE, UL
ErP-data
Efficiency η_{statA}: 52.9 %
Efficiency: N_{actual} = 55.7 / N_{target} = 40**
EC controller integrated
* Rated data
**ErP 2015

Connection diagram Page 530
1360-403

System components Page 430

Dimensions mm

Airflow direction

Design L - ZAplus Ontop, guard grille suction side

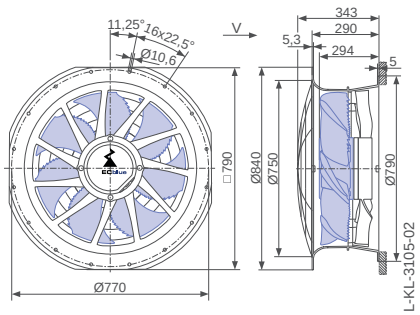

Airflow direction

Design L - ZAplus Ontop without guard grille

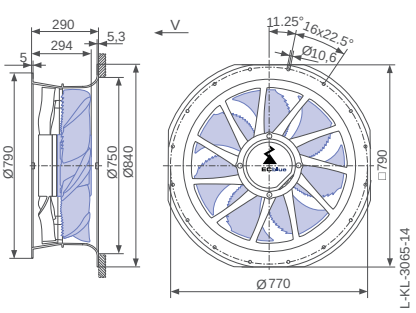

Design L - ZAplus Ontop, guard grille pressure side

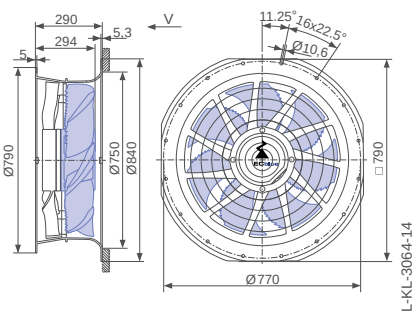

Performance data

Type	Characteristic curve	Speed n min⁻¹	Operating point	Current I A	Input power P_{sys} W	Suction side sound power level L_{WA5} dB(A)	Maximum ambient temperature t_R °C
ZN063-ZI_.GL.V7P3	I	1600	①	5.60	3700		55
			②	5.60	3600	93	
			③	4.40	2800	90	
	II	1480	④	5.40	3500		60
			⑤	4.40	2900	90	
			⑥	3.40	2200	88	
	III	1250	⑦	3.20	2100		
			⑧	2.70	1700	86	
			⑨	2.10	1350	84	
	IV	930	⑩	1.50	920		
			⑪	1.25	740	78	
			⑫	1.05	600	77	
	V	620	⑬	0.66	300		
			⑭	0.58	250	67	
			⑮	0.52	210	67	

Current values determined at 400V

Fan ordering information

Airflow direction ▶ ◀ Airflow direction

Design	L (guard grille suction side) Ontop	L (without guard grille) Ontop	L (guard grille pressure side) Ontop	Q (without guard grille)	Q (guard grille pressure side)	H (guard grille pressure side) Flattop
	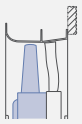	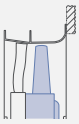	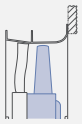	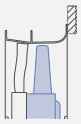	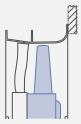	
Type **Article no.**	**ZN063-ZIL.GL.V7P3** **166782**	**ZN063-ZIL.GL.V7P3** **164319**	**ZN063-ZIL.GL.V7P3** **164320**	**ZN063-ZIQ.GL.V7P3** **164322**	**ZN063-ZIQ.GL.V7P3** **164323**	**ZN063-ZIH.GL.V7P3** **164327**
Weight kg	37.60	35.70	36.70	37.20	38.20	36.70

ZAplus attachable on both sides.

Control technology

Control modules	Sensor control modules	Add-on modules	Operating terminal
			
Page 452	Page 454	Page 463	Page 472

Design Q - ZAplus with adapter plate, without guard grille

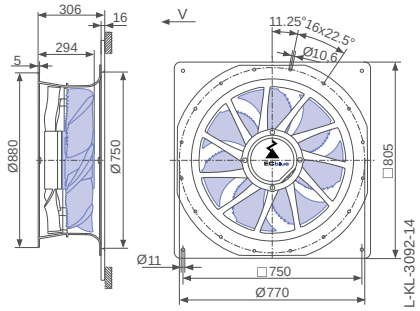

Design Q - ZAplus with adapter plate, guard grille pressure side

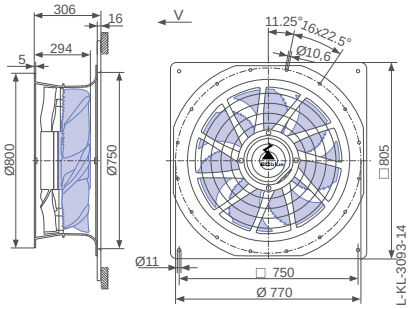

Design H - ZAplus Flattop, guard grille pressure side

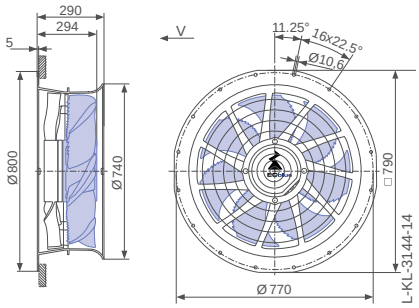

FE2owlet-ECblue with ZAplus

for single phase alternating current, 200-277 V

ZN071



Characteristic curve

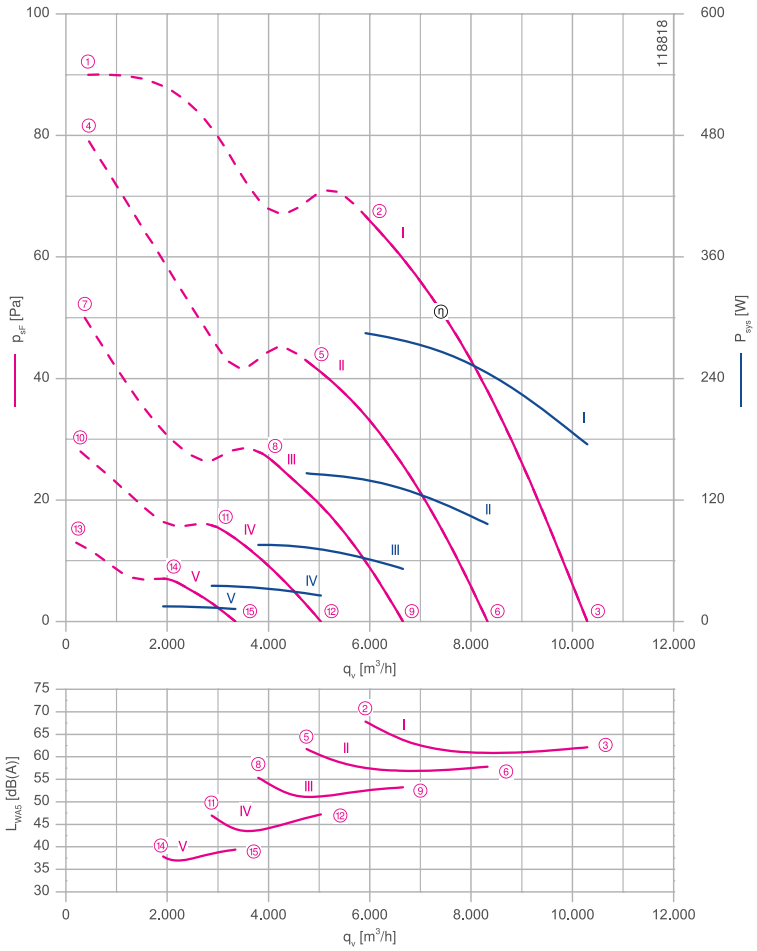

Measured in ZAplus without guard grille in installation type A according to ISO 5801

Description

Motor technology: EC
Rated voltage U_N: **1~ 200-277 V***
Rated frequency f_N: **50/60 Hz***
Input power P_{sys}: **290 W***
Rated current I_N: **1.45- 1.05 A***
Rated speed n_N: **620 min^{-1}***
Thermal class: **THCL155***
Min. permitted ambient temperature $t_{R(min)}$: -35 °C
Max. permitted ambient temperature $t_{R(max)}$: 45 °C
Electrical connection: integrated Controller
Number of blades: 7
Protection class: IP54
Motor protection: Integrated active temperature management
Blades: High Performance Composite Material, uncoated, black
Rotor: Steel, 2 coat paint, ultramarine blue
Conformity: ErP 2015, CE
ErP-data
Efficiency η_{statA}: 46.0 %
Efficiency: N_{actual} = 55.9 / N_{target} = 40**
EC controller integrated
* Rated data
**ErP 2015

Connection diagram Page 529
1360-384

System components Page 430

Dimensions mm

Airflow direction

Design L - ZAplus Ontop, guard grille suction side

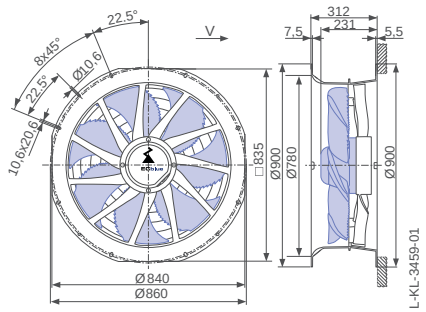

Airflow direction

Design L - ZAplus Ontop without guard grille

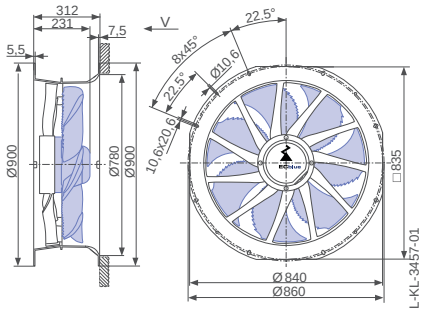

Design L - ZAplus Ontop, guard grille pressure side

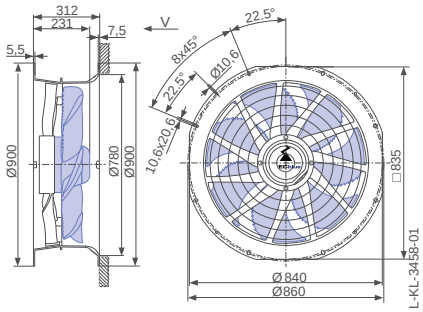

Performance data

Type	Characteristic curve	Speed n min⁻¹	Operating point	Current I A	Input power P_{sys} W	Suction side sound power level L_{WA5} dB(A)	Maximum ambient temperature t_R °C
ZN071-6I_.BD.V7P3	I	620	①	1.25	290		45
			②	1.25	280	68	
			③	0.78	170	62	
	II	500	④	1.00	230		60
			⑤	0.64	150	62	
			⑥	0.44	95	58	
	III	400	⑦	0.52	120		
			⑧	0.36	75	55	
			⑨	0.27	50	53	
	IV	300	⑩	0.26	50		
			⑪	0.20	36	47	
			⑫	0.17	26	47	
	V	200	⑬	0.15	20		
			⑭	0.14	15	38	
			⑮	0.13	12	39	

Current values determined at 230V

Fan ordering information

Airflow direction	Airflow direction				
Design	L (guard grille suction side) Ontop	L (without guard grille) Ontop	L (guard grille pressure side) Ontop	H (without guard grille) Flattop	H (guard grille pressure side) Flattop
	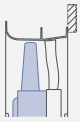	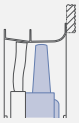	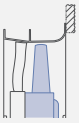		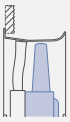
Type **Article no.**	**ZN071-6IL.BD.V7P3** **170380**	**ZN071-6IL.BD.V7P3** **170376**	**ZN071-6IL.BD.V7P3** **170377**	**ZN071-6IH.BD.V7P3** **170378**	**ZN071-6IH.BD.V7P3** **170379**
Weight kg	19.40	16.20	17.50	15.20	16.50

ZAplus attachable on both sides.

Control technology

Control modules



Page 452

Design H - ZAplus Flattop, without guard grille

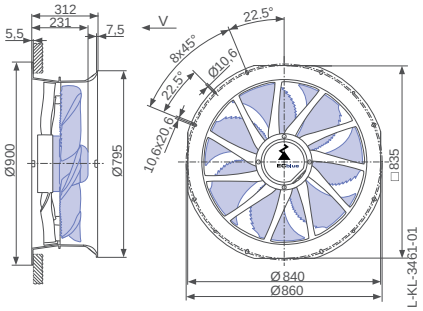

Design H - ZAplus Flattop, guard grille pressure side

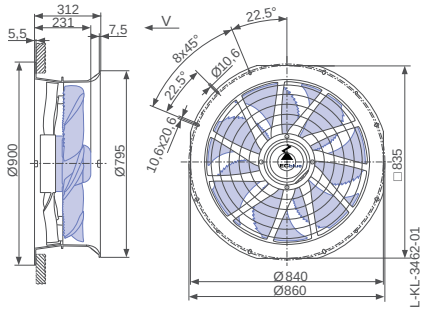

FE2owlet-ECblue with ZAplus

for single phase alternating current, 200-277 V

ZN071



Characteristic curve

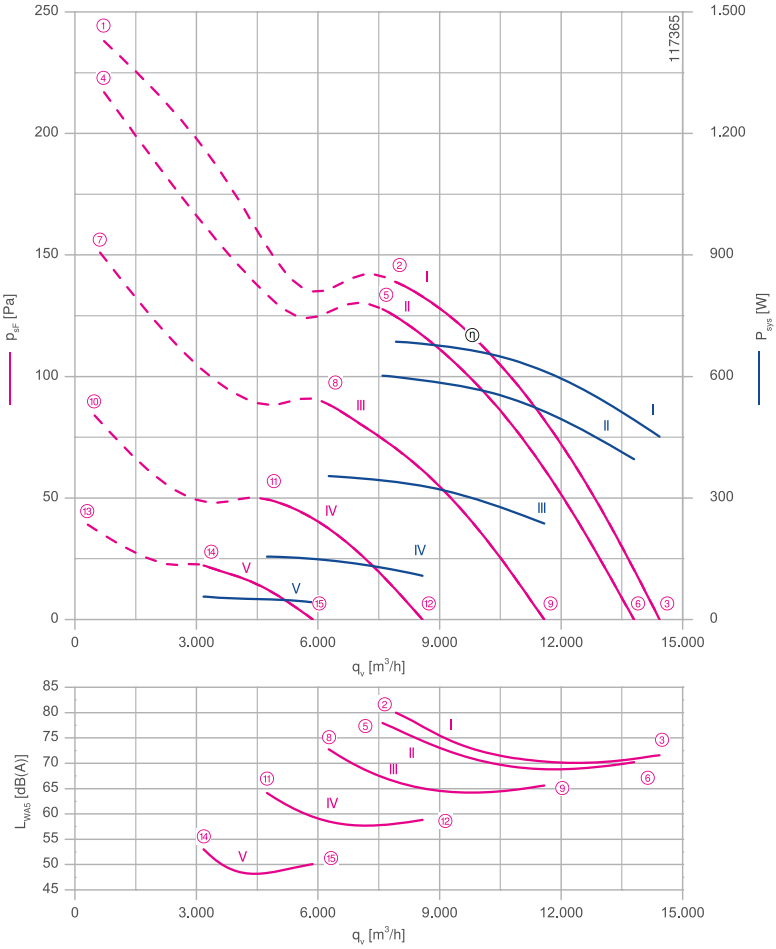

Measured in ZAplus without guard grille in installation type A according to ISO 5801

Description

Motor technology: EC
Rated voltage U_N: **1~ 200-277 V***
Rated frequency f_N: **50/60 Hz***
Input power P_{sys}: **0.68 kW***
Rated current I_N: **3.50- 2.50 A***
Rated speed n_N: **890 min^{-1}***
Thermal class: **THCL155***
Min. permitted ambient temperature $t_{R(min)}$: -35 °C
Max. permitted ambient temperature $t_{R(max)}$: 55 °C
Electrical connection: integrated Controller
Number of blades: 7
Protection class: IP54
Motor protection: Integrated active temperature management
Blades: High Performance Composite Material, uncoated, black
Rotor: Steel, 2 coat paint, ultramarine blue
Conformity: ErP 2015, CE, UL
ErP-data
Efficiency η_{statA}: 53.6 %
Efficiency: N_{actual} = 61.0 / N_{target} = 40**
EC controller integrated
* Rated data
**ErP 2015

Connection diagram Page 530
1360-403

System components Page 430

Dimensions mm

Airflow direction

Design L - ZAplus Ontop, guard grille suction side

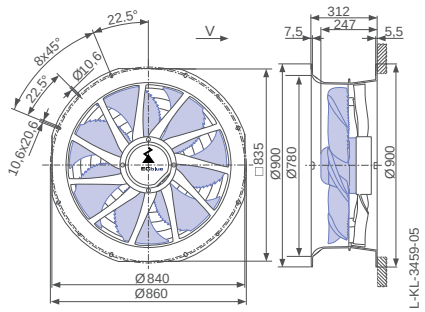

Airflow direction

Design L - ZAplus Ontop without guard grille

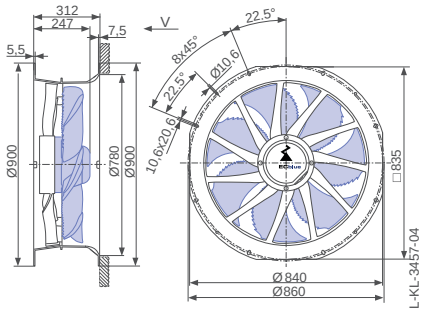

Design L - ZAplus Ontop, guard grille pressure side

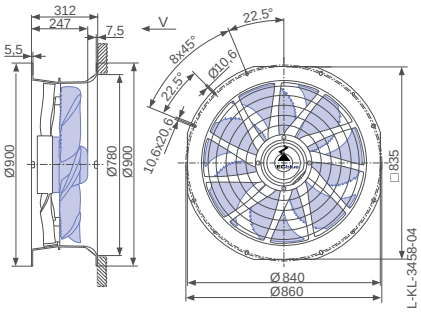

Performance data

Type	Characteristic curve	Speed n min⁻¹	Operating point	Current I A	Input power P_{sys} W	Suction side sound power level L_{WA5} dB(A)	Maximum ambient temperature t_R °C
ZN071-ZI_.DG._7P3	I	890	①	4.40	1000		55
			②	3.00	680	80	
			③	2.00	460	72	
	II	850	④	3.80	860		60
			⑤	2.60	600	78	
			⑥	1.75	400	70	
	III	710	⑦	2.20	500		
			⑧	1.55	350	73	
			⑨	1.10	240	66	
	IV	530	⑩	0.98	220		
			⑪	0.72	150	64	
			⑫	0.52	110	59	
	V	360	⑬	0.42	80		
			⑭	0.50	55	53	
			⑮	0.44	42	50	

Current values determined at 230V

Fan ordering information

Airflow direction → ← Airflow direction

Design	L (guard grille suction side) Ontop	L (without guard grille) Ontop	L (guard grille pressure side) Ontop	H (without guard grille) Flattop	H (guard grille pressure side) Flattop
	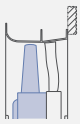	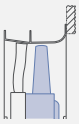	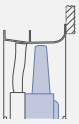		
Type **Article no.**	**ZN071-ZIL.DG.V7P3** **170404**	**ZN071-ZIL.DG.V7P3** **170341**	**ZN071-ZIL.DG.V7P3** **170342**	**ZN071-ZIH.DG.V7P3** **170402**	**ZN071-ZIH.DG.V7P3** **170403**
Weight kg	22.40	19.30	20.60	18.30	19.50

ZAplus attachable on both sides.

Control technology

Control modules	Sensor control modules	Add-on modules	Operating terminal
			
Page 452	Page 454	Page 463	Page 472

Design H - ZAplus Flattop, without guard grille

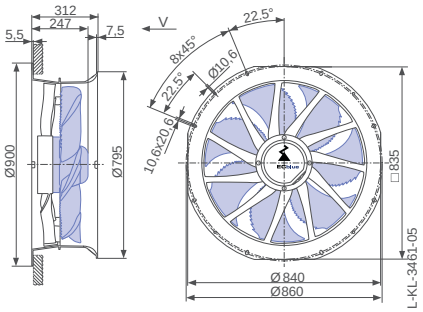

Design H - ZAplus Flattop, guard grille pressure side

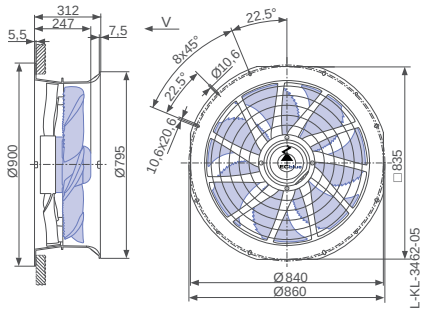

Information
FE2owlet-ECblue
FE2owlet
FE2owlet-ECblue with ZAplus
FE2owlet with ZAplus
System components
Control technology
Appendix

FE2owlet-ECblue with ZAplus

for three phase alternating current, 200-240 V

ZN071



Characteristic curve

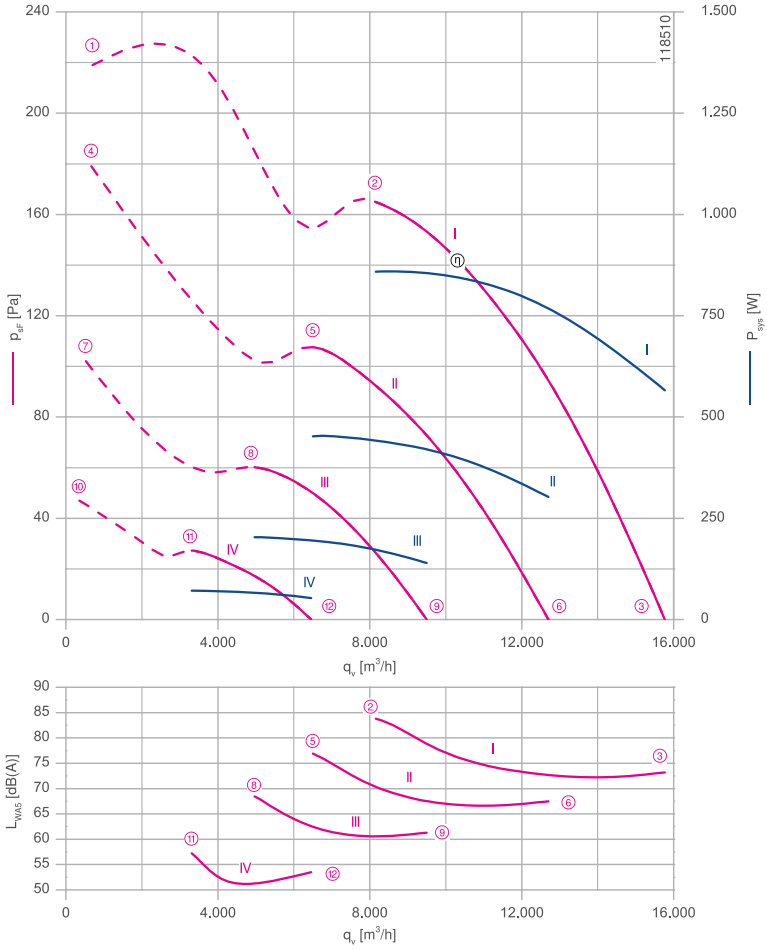

Measured in ZAplus without guard grille in installation type A according to ISO 5801

Description

Motor technology: EC
Rated voltage U_N: **3~ 200-240 V***
Rated frequency f_N: **50/60 Hz***
Input power P_{sys}: **0.86 kW***
Rated current I_N: **2.70- 2.20 A***
Rated speed n_N: **960 min^{-1}***
Thermal class: **THCL155***
Min. permitted ambient temperature $t_{R(min)}$: -35 °C
Max. permitted ambient temperature $t_{R(max)}$: 60 °C
Electrical connection: integrated Controller
Number of blades: 7
Protection class: IP54
Motor protection: Integrated active temperature management
Blades: High Performance Composite Material, uncoated, black
Rotor: Steel, 2 coat paint, ultramarine blue
Conformity: ErP 2015, CE, UL
ErP-data
Efficiency η_{statA}: 54.1 %
Efficiency: N_{actual} = 60.9 / N_{target} = 40**
EC controller integrated
* Rated data
**ErP 2015

Connection diagram Page 530
1360-403

System components Page 430

Dimensions mm

Airflow direction

Design L - ZAplus Ontop, guard grille suction side

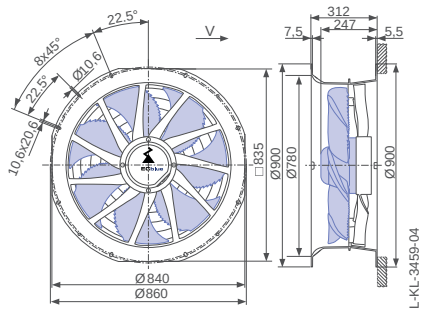

Airflow direction

Design L - ZAplus Ontop without guard grille

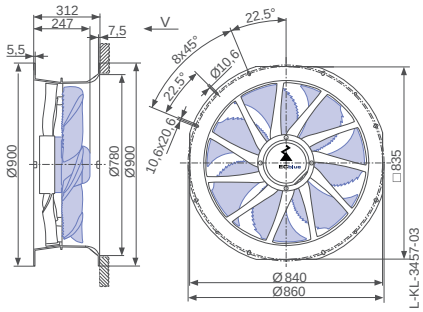

Design L - ZAplus Ontop, guard grille pressure side

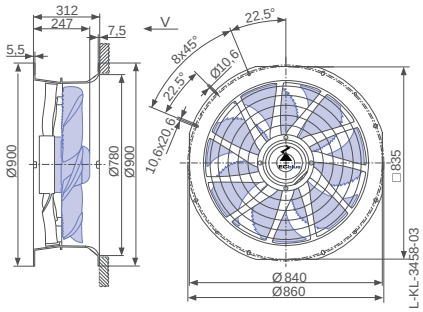

Performance data

Type	Characteristic curve	Speed n min⁻¹	Operating point	Current I A	Input power P_{sys} W	Suction side sound power level L_{WA5} dB(A)
ZN071-ZI_.DG.V7P3	I	960	①	2.40	880	
			②	2.30	860	84
			③	1.55	560	73
	II	770	④	1.80	660	
			⑤	1.25	440	77
			⑥	0.90	300	68
	III	580	⑦	0.88	290	
			⑧	0.68	200	69
			⑨	0.54	140	61
	IV	390	⑩	0.44	100	
			⑪	0.34	70	58
			⑫	0.29	55	54

Current values determined at 230V

Fan ordering information

Airflow direction → Airflow direction

Design	L (guard grille suction side) Ontop	L (without guard grille) Ontop	L (guard grille pressure side) Ontop	H (without guard grille) Flattop	H (guard grille pressure side) Flattop
	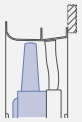			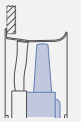	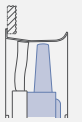
Type **Article no.**	**ZN071-ZIL.DG.V7P3** **170396**	**ZN071-ZIL.DG.V7P3** **170392**	**ZN071-ZIL.DG.V7P3** **170393**	**ZN071-ZIH.DG.V7P3** **170394**	**ZN071-ZIH.DG.V7P3** **170395**
Weight kg	22.40	19.30	20.50	18.30	19.50

ZAplus attachable on both sides.

Control technology

Control modules	Sensor control modules	Add-on modules	Operating terminal
			
Page 452	Page 454	Page 463	Page 472

Design H - ZAplus Flattop, without guard grille

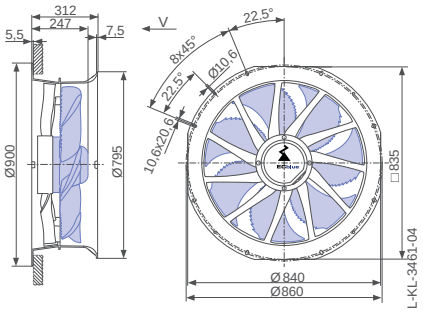

Design H - ZAplus Flattop, guard grille pressure side

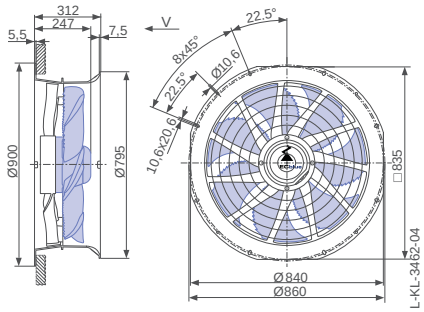

FE2owlet-ECblue with ZAplus

for three phase alternating current, 200-240 V

ZN071



Characteristic curve

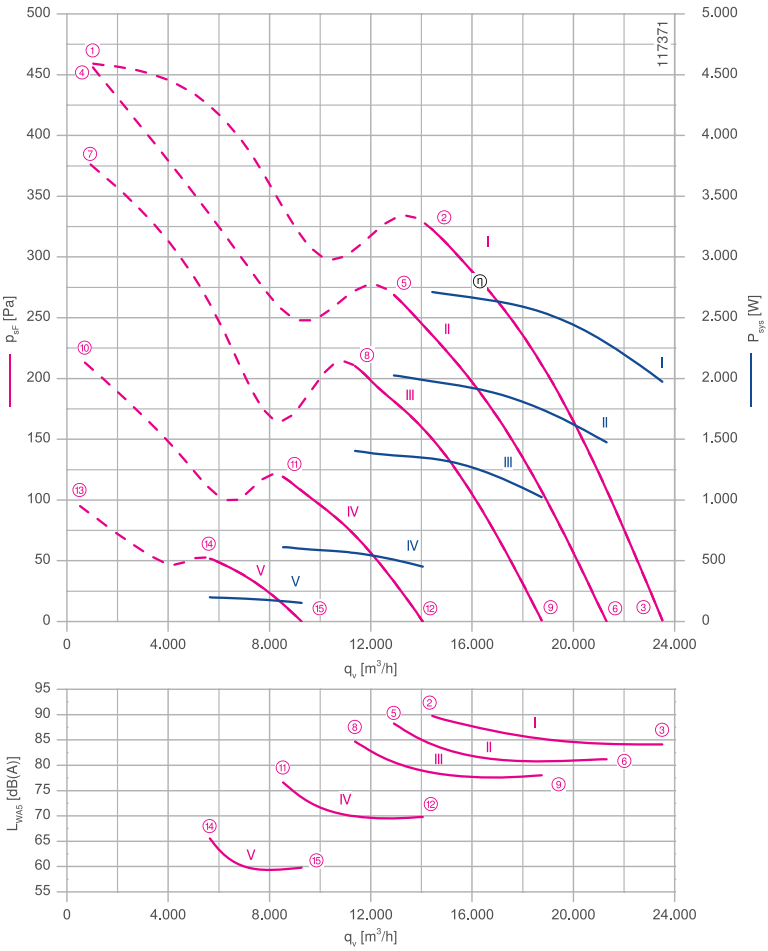

Measured in ZAplus without guard grille in installation type A according to ISO 5801

Description

Motor technology: EC
Rated voltage U_N: **3~ 200-240 V***
Rated frequency f_N: **50/60 Hz***
Input power P_{sys}: **2.70 kW***
Rated current I_N: **8.20- 6.80 A***
Rated speed n_N: **1300 min^{-1}***
Thermal class: **THCL155***
Min. permitted ambient temperature $t_{R(min)}$: -35 °C
Max. permitted ambient temperature $t_{R(max)}$: 50 °C
Electrical connection: integrated Controller
Number of blades: 7
Protection class: IP54
Motor protection: Integrated active temperature management
Blades: Aluminium, uncoated
Rotor: Steel, 2 coat paint, ultramarine blue
Conformity: ErP 2015, CE, UL
ErP-data
Efficiency η_{statA}: 52.8 %
Efficiency: N_{actual} = 56.5 / N_{target} = 40**
EC controller integrated
* Rated data
**ErP 2015

Connection diagram Page 530
1360-403

System components Page 430

Dimensions mm

Airflow direction

Design L - ZAplus Ontop, guard grille suction side

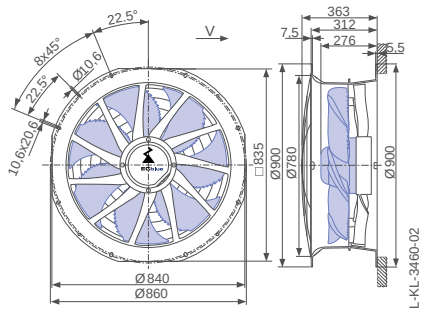

Airflow direction

Design L - ZAplus Ontop without guard grille

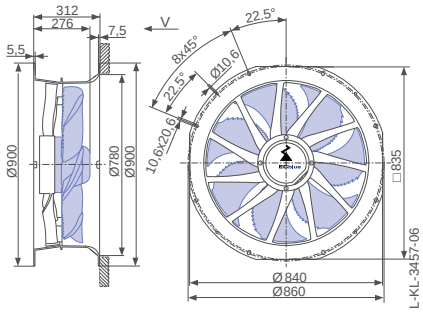

Design L - ZAplus Ontop, guard grille pressure side

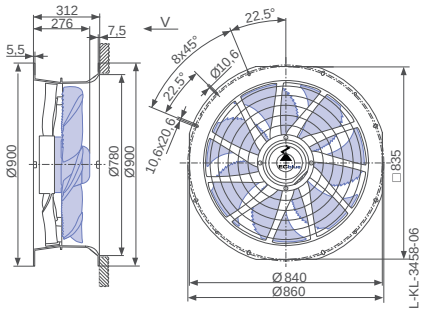

Performance data

Type	Characteristic curve	Speed n min⁻¹	Operating point	Current I A	Input power P_{sys} W	Suction side sound power level L_{WA5} dB(A)	Maximum ambient temperature t_R °C
ZN071-ZI_.GG.V7P4	I	1300	①	7.40	2800		50
			②	7.20	2700	90	
			③	5.20	1950	84	
	II	1180	④	7.40	2800		60
			⑤	5.40	2000	88	
			⑥	3.90	1500	81	
	III	1040	⑦	5.40	2100		
			⑧	3.70	1400	85	
			⑨	2.80	1000	78	
	IV	780	⑩	2.40	880		
			⑪	1.65	600	77	
			⑫	1.30	460	70	
	V	520	⑬	0.86	280		
			⑭	0.66	200	66	
			⑮	0.58	150	60	

Current values determined at 230V

Fan ordering information

Airflow direction → Airflow direction

Design	L (guard grille suction side) Ontop	L (without guard grille) Ontop	L (guard grille pressure side) Ontop	H (without guard grille) Flattop	H (guard grille pressure side) Flattop
	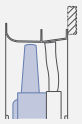	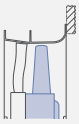	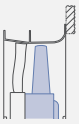		
Type **Article no.**	**ZN071-ZIL.GG.V7P4** **170418**	**ZN071-ZIL.GG.V7P4** **170414**	**ZN071-ZIL.GG.V7P4** **170415**	**ZN071-ZIH.GG.V7P4** **170416**	**ZN071-ZIH.GG.V7P4** **170417**
Weight kg	33.40	30.80	32.00	29.90	31.10

ZAplus attachable on both sides.

Control technology

Control modules	Sensor control modules	Add-on modules	Operating terminal
			
Page 452	Page 454	Page 463	Page 472

Design H - ZAplus Flattop, without guard grille

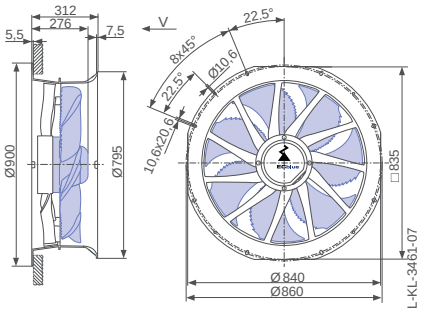

Design H - ZAplus Flattop, guard grille pressure side

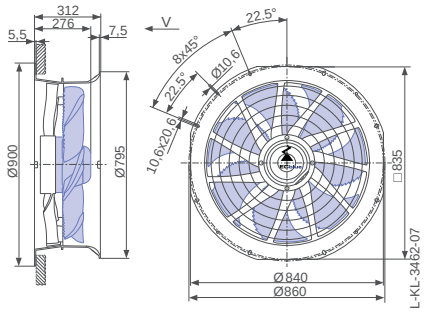

FE2owlet-ECblue with ZAplus

for three phase alternating current, 200-240 V

ZN071



Description

Motor technology: EC
Rated voltage U_N: **3~ 200-240 V***
Rated frequency f_N: **50/60 Hz***
Input power P_{sys}: **3.30 kW***
Rated current I_N: **10.00- 8.40 A***
Rated speed n_N: **1400 min^{-1}***
Thermal class: **THCL155***
Min. permitted ambient temperature $t_{R(min)}$: -35 °C
Max. permitted ambient temperature $t_{R(max)}$: 55 °C
Electrical connection: integrated Controller
Number of blades: 7
Protection class: IP54
Motor protection: Integrated active temperature management
Blades: Aluminium, uncoated
Rotor: Steel, 2 coat paint, ultramarine blue
Conformity: ErP 2015, CE, UL
ErP-data
Efficiency η_{statA}: 53.9 %
Efficiency: N_{actual} = 57.0 / N_{target} = 40**
EC controller integrated
* Rated data
**ErP 2015

Characteristic curve

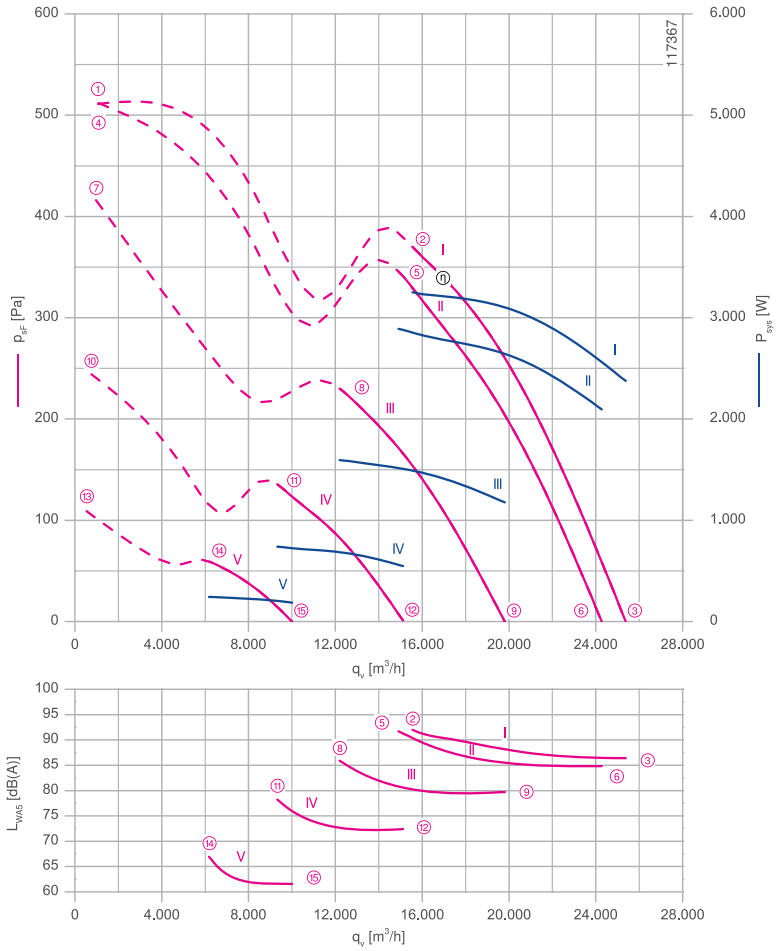

Measured in ZAplus without guard grille in installation type A according to ISO 5801

Connection diagram Page 530
1360-403

System components Page 430

Dimensions mm

Airflow direction

Design L - ZAplus Ontop, guard grille suction side

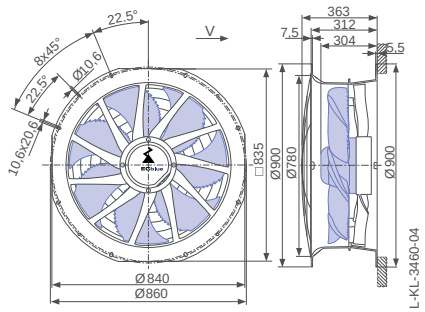

Airflow direction

Design L - ZAplus Ontop without guard grille

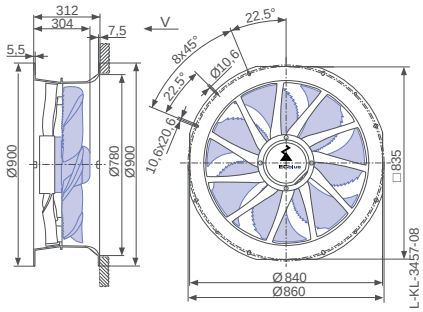

Design L - ZAplus Ontop, guard grille pressure side

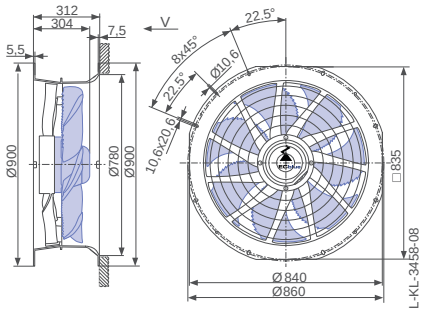

Performance data

Type	Characteristic curve	Speed n min⁻¹	Operating point	Current I A	Input power P_{sys} W	Suction side sound power level L_{WA5} dB(A)	Maximum ambient temperature t_R °C
ZN071-ZI_.GL.V7P4	I	1400	①	8.60	3200		55
			②	8.60	3300	92	
			③	6.20	2400	86	
	II	1340	④	8.40	3200		60
			⑤	7.60	2900	92	
			⑥	5.60	2100	85	
	III	1100	⑦	6.20	2300		
			⑧	4.20	1600	86	
			⑨	3.20	1200	80	
	IV	840	⑩	2.90	1050		
			⑪	2.00	720	78	
			⑫	1.55	540	72	
	V	560	⑬	1.00	340		
			⑭	0.76	240	67	
			⑮	0.64	190	62	

Current values determined at 230V

Fan ordering information

Airflow direction ▶ ◀ Airflow direction

Design	L (guard grille suction side) Ontop	L (without guard grille) Ontop	L (guard grille pressure side) Ontop	H (without guard grille) Flattop	H (guard grille pressure side) Flattop
	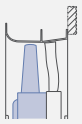	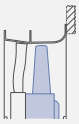	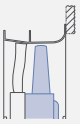		
Type **Article no.**	**ZN071-ZIL.GL.V7P4** **170434**	**ZN071-ZIL.GL.V7P4** **170430**	**ZN071-ZIL.GL.V7P4** **170431**	**ZN071-ZIH.GL.V7P4** **170432**	**ZN071-ZIH.GL.V7P4** **170433**
Weight kg	37.80	35.20	36.40	34.30	35.50

ZAplus attachable on both sides.

Control technology

Control modules	Sensor control modules	Add-on modules	Operating terminal
			
Page 452	Page 454	Page 463	Page 472

Design H - ZAplus Flattop, without guard grille

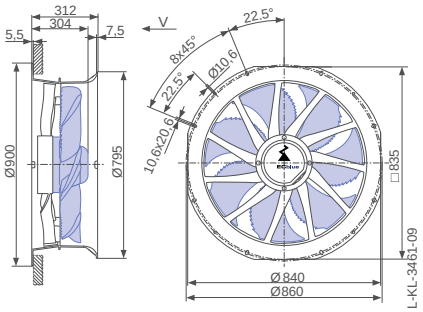

Design H - ZAplus Flattop, guard grille pressure side

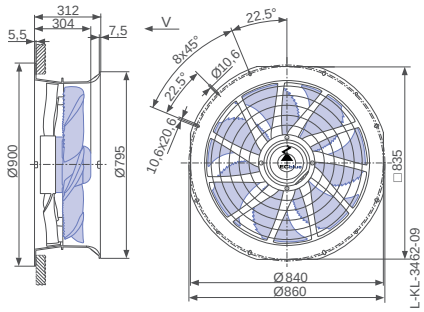

FE2owlet-ECblue with ZAplus

for three phase alternating current, 380-480 V

ZN071



Characteristic curve

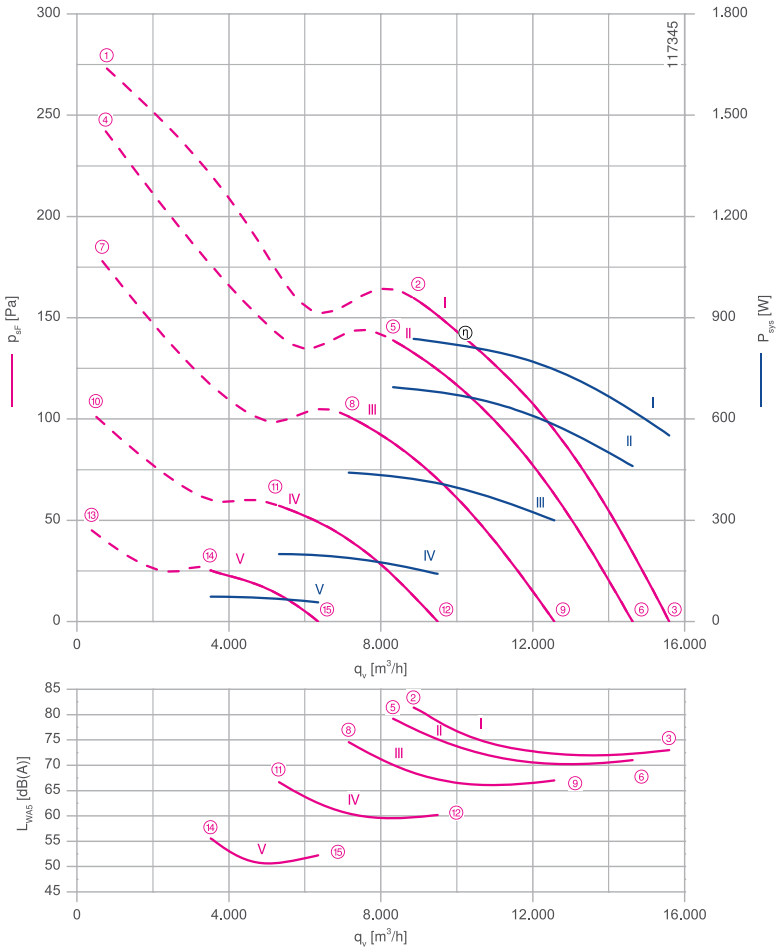

Measured in ZAplus without guard grille in installation type A according to ISO 5801

Description

Motor technology: EC
Rated voltage U_N: **3~ 380-480 V***
Rated frequency f_N: **50/60 Hz***
Input power P_{sys}: **0.84 kW***
Rated current I_N: **1.45- 1.15 A***
Rated speed n_N: **960 min^{-1}***
Thermal class: **THCL155***
Min. permitted ambient temperature $t_{R(min)}$: -35 °C
Max. permitted ambient temperature $t_{R(max)}$: 55 °C
Electrical connection: integrated Controller
Number of blades: 7
Protection class: IP54
Motor protection: Integrated active temperature management
Blades: High Performance Composite Material, uncoated, black
Rotor: Steel, 2 coat paint, ultramarine blue
Conformity: ErP 2015, CE, UL
ErP-data
Efficiency η_{statA}: 54.5 %
Efficiency: N_{actual} = 61.4 / N_{target} = 40**
EC controller integrated
* Rated data
**ErP 2015

Connection diagram Page 530
1360-403

System components Page 430

Dimensions mm

Airflow direction

Design L - ZAplus Ontop, guard grille suction side

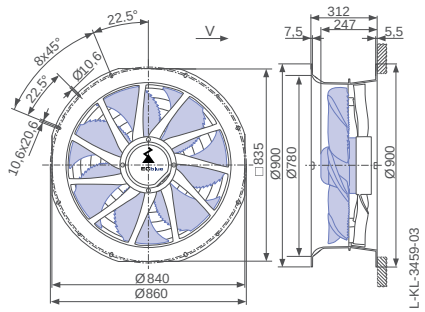

Airflow direction

Design L - ZAplus Ontop without guard grille

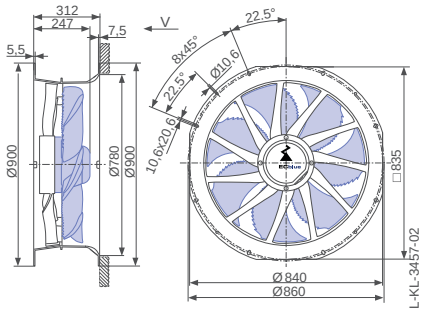

Design L - ZAplus Ontop, guard grille pressure side

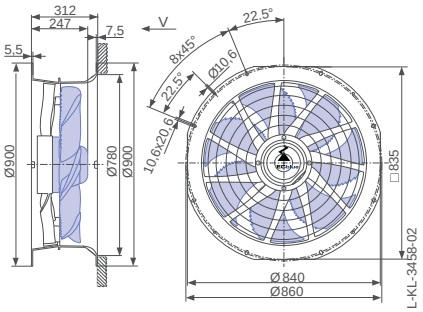

Performance data

Type	Characteristic curve	Speed n min⁻¹	Operating point	Current I A	Input power P_{sys} W	Suction side sound power level L_{WA5} dB(A)	Maximum ambient temperature t_R °C
ZN071-ZI_.DG._7P3	I	960	①	1.90	1250		55
			②	1.35	840	82	
			③	0.98	560	73	
	II	900	④	1.60	1000		60
			⑤	1.20	700	79	
			⑥	0.88	460	71	
	III	770	⑦	1.10	640		
			⑧	0.86	440	75	
			⑨	0.68	300	67	
	IV	580	⑩	0.66	280		
			⑪	0.52	200	67	
			⑫	0.42	140	60	
	V	390	⑬	0.33	100		
			⑭	0.28	75	56	
			⑮	0.24	55	52	

Current values determined at 400V

Fan ordering information

Airflow direction	Airflow direction			
Design	L (guard grille suction side) Ontop	L (without guard grille) Ontop	L (guard grille pressure side) Ontop	H (without guard grille) Flattop	H (guard grille pressure side) Flattop
	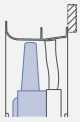	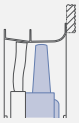	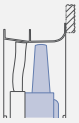		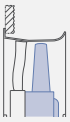
Type **Article no.**	**ZN071-ZIL.DG.V7P3** **170388**	**ZN071-ZIL.DG.V7P3** **170337**	**ZN071-ZIL.DG.V7P3** **170338**	**ZN071-ZIH.DG.V7P3** **170386**	**ZN071-ZIH.DG.V7P3** **170387**
Weight kg	22.40	19.30	20.50	18.30	19.50

ZAplus attachable on both sides.

Control technology

Control modules	Sensor control modules	Add-on modules	Operating terminal
			
Page 452	Page 454	Page 463	Page 472

Design H - ZAplus Flattop, without guard grille

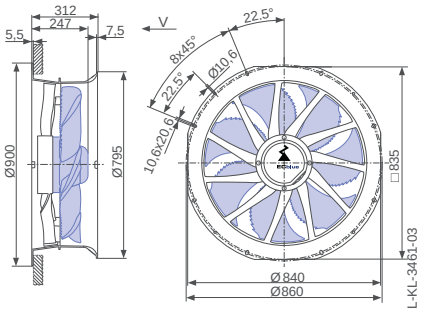

Design H - ZAplus Flattop, guard grille pressure side

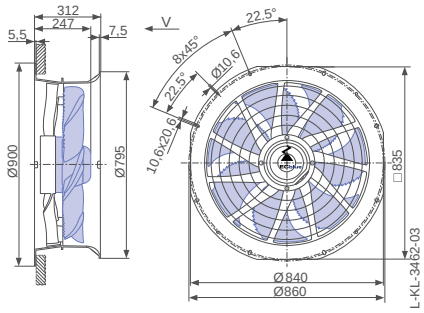

FE2owlet-ECblue with ZAplus

for three phase alternating current, 380-480 V

ZN071



Characteristic curve

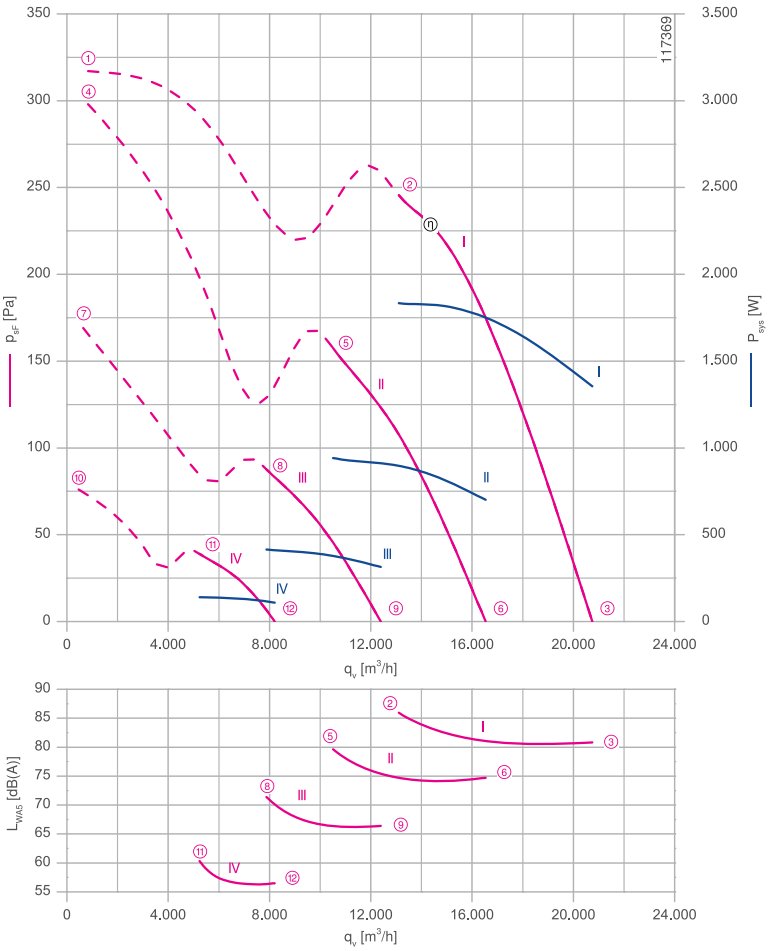

Measured in ZAplus without guard grille in installation type A according to ISO 5801

Description

Motor technology: EC
Rated voltage U_N: **3~ 380-480 V***
Rated frequency f_N: **50/60 Hz***
Input power P_{sys}: **1.85 kW***
Rated current I_N: **3.00- 2.40 A***
Rated speed n_N: **1150 min^{-1}***
Thermal class: **THCL155***
Min. permitted ambient temperature $t_{R(min)}$: -35 °C
Max. permitted ambient temperature $t_{R(max)}$: 65 °C
Electrical connection: integrated Controller
Number of blades: 7
Protection class: IP54
Motor protection: Integrated active temperature management
Blades: Aluminium, uncoated
Rotor: Steel, 2 coat paint, ultramarine blue
Conformity: ErP 2015, CE, UL
ErP-data
Efficiency η_{statA}: 54.8 %
Efficiency: N_{actual} = 59.5 / N_{target} = 40**
EC controller integrated
* Rated data
**ErP 2015

Connection diagram Page 530
1360-403

System components Page 430

Dimensions mm

Airflow direction

Design L - ZAplus Ontop, guard grille suction side

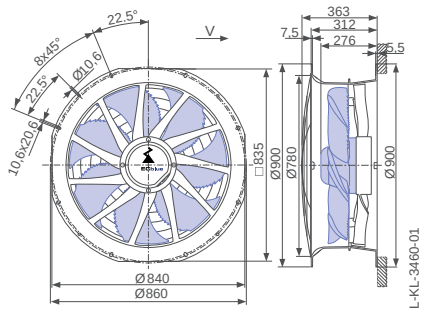

Airflow direction

Design L - ZAplus Ontop without guard grille

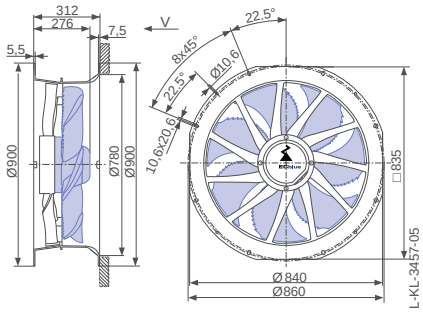

Design L - ZAplus Ontop, guard grille pressure side

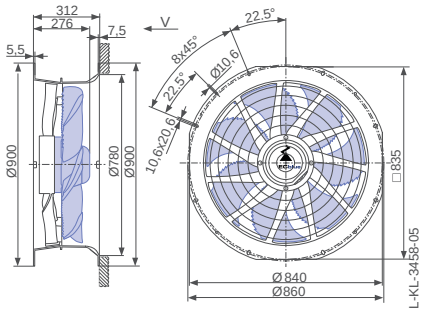

Performance data

Type	Characteristic curve	Speed n min⁻¹	Operating point	Current I A	Input power P_{sys} W	Suction side sound power level L_{WA5} dB(A)
ZN071-ZI_.GG.V7P4	I	1150	①	2.40	1550	
			②	2.80	1850	86
			③	2.10	1350	81
	II	920	④	2.20	1400	
			⑤	1.55	940	80
			⑥	1.20	700	75
	III	690	⑦	1.10	600	
			⑧	0.84	420	72
			⑨	0.70	310	66
	IV	460	⑩	0.52	200	
			⑪	0.42	140	61
			⑫	0.37	110	57

Current values determined at 400V

Fan ordering information

Airflow direction ⟷ Airflow direction

Design	L (guard grille suction side) Ontop	L (without guard grille) Ontop	L (guard grille pressure side) Ontop	H (without guard grille) Flattop	H (guard grille pressure side) Flattop
	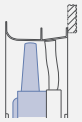			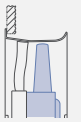	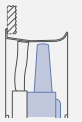
Type **Article no.**	**ZN071-ZIL.GG.V7P4** **170410**	**ZN071-ZIL.GG.V7P4** **170345**	**ZN071-ZIL.GG.V7P4** **170346**	**ZN071-ZIH.GG.V7P4** **170408**	**ZN071-ZIH.GG.V7P4** **170409**
Weight kg	33.40	30.80	32.00	29.90	31.10

ZAplus attachable on both sides.

Control technology

Control modules	Sensor control modules	Add-on modules	Operating terminal
			
Page 452	Page 454	Page 463	Page 472

Design H - ZAplus Flattop, without guard grille

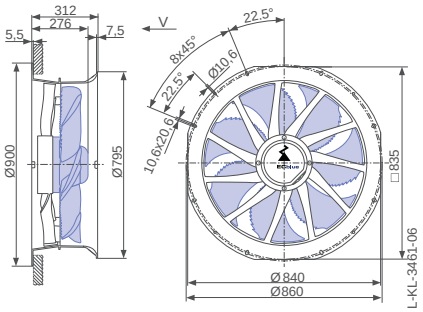

Design H - ZAplus Flattop, guard grille pressure side

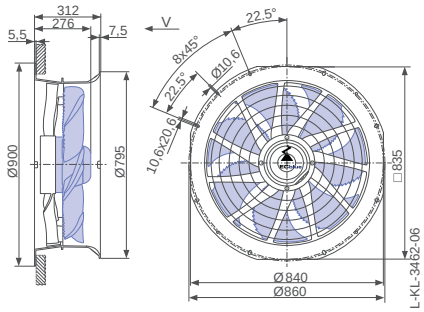

FE2owlet-ECblue with ZAplus

for three phase alternating current, 380-480 V

ZN071



Description

Motor technology: EC
Rated voltage U_N: **3~ 380-480 V***
Rated frequency f_N: **50/60 Hz***
Input power P_{sys}: **3.20 kW***
Rated current I_N: **5.20- 4.00 A***
Rated speed n_N: **1400 min^{-1}***
Thermal class: **THCL155***
Min. permitted ambient temperature $t_{R(min)}$: -35 °C
Max. permitted ambient temperature $t_{R(max)}$: 55 °C
Electrical connection: integrated Controller
Number of blades: 7
Protection class: IP54
Motor protection: Integrated active temperature management
Blades: Aluminium, uncoated
Rotor: Steel, 2 coat paint, ultramarine blue
Conformity: ErP 2015, CE, UL
ErP-data
Efficiency η_{statA}: 54.4 %
Efficiency: N_{actual} = 57.6 / N_{target} = 40**
EC controller integrated
* Rated data
**ErP 2015

Characteristic curve

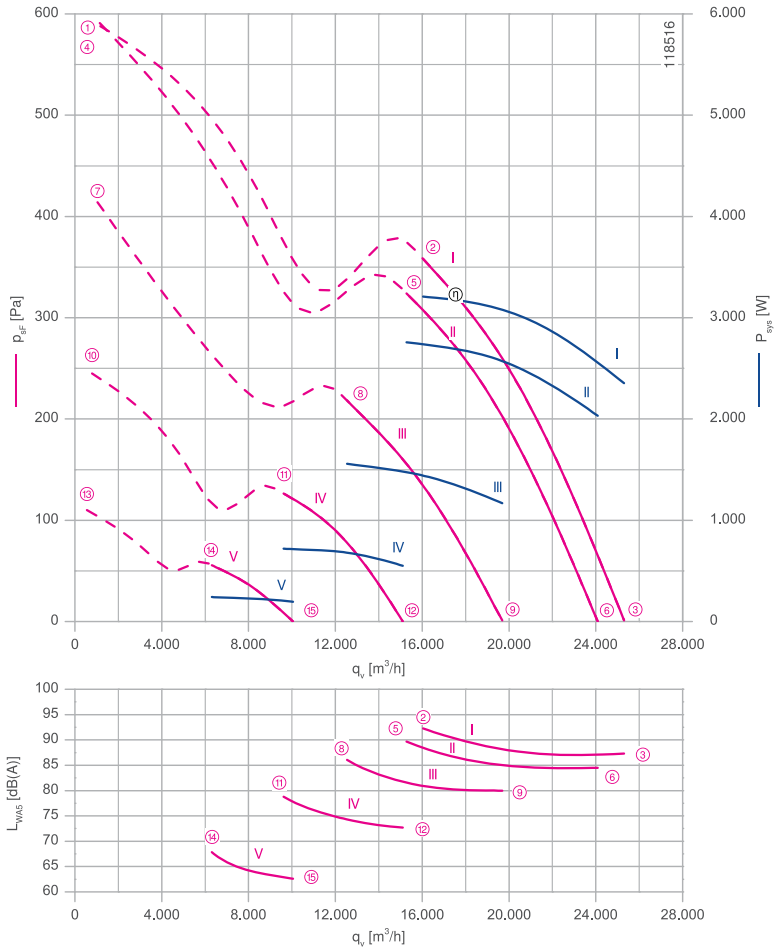

Measured in ZAplus without guard grille in installation type A according to ISO 5801

Connection diagram Page 530
1360-403

System components Page 430

Dimensions mm

Airflow direction

Design L - ZAplus Ontop, guard grille suction side

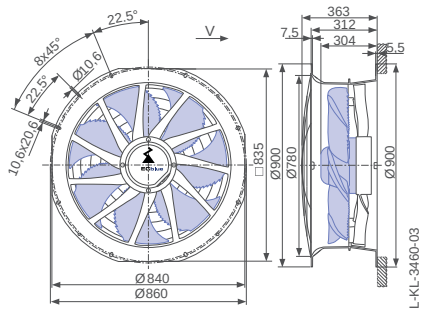

Airflow direction

Design L - ZAplus Ontop without guard grille

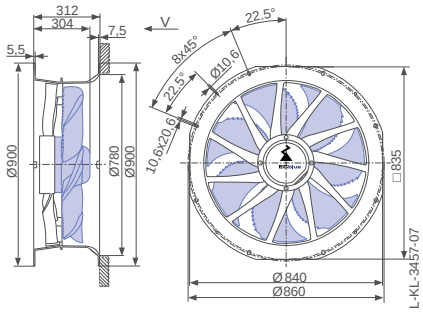

Design L - ZAplus Ontop, guard grille pressure side

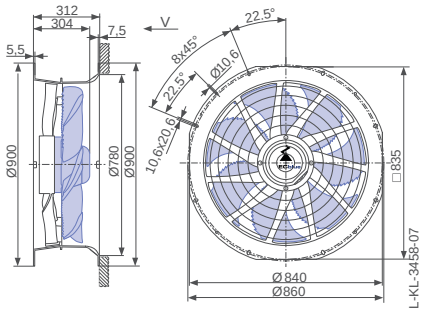

Performance data

Type	Characteristic curve	Speed n min⁻¹	Operating point	Current I A	Input power P_{sys} W	Suction side sound power level L_{WA5} dB(A)	Maximum ambient temperature t_R °C
ZN071-ZI_.GL.V7P4	I	1400	①	6.00	3900		55
			②	4.80	3200	93	
			③	3.60	2400	87	
	II	1330	④	1.25	3900		60
			⑤	2.40	2800	90	
			⑥	1.85	2000	85	
	III	1100	⑦	0.60	2300		
			⑧	0.54	1550	86	
			⑨	1.25	1150	80	
	IV	840	⑩	4.20	1050		
			⑪	3.10	720	79	
			⑫	0.60	560	73	
	V	560	⑬	6.00	350		
			⑭	4.20	240	68	
			⑮	4.20	200	63	

Current values determined at 400V

Fan ordering information

Airflow direction ▶ ◀ Airflow direction

Design	L (guard grille suction side) Ontop	L (without guard grille) Ontop	L (guard grille pressure side) Ontop	H (without guard grille) Flattop	H (guard grille pressure side) Flattop
	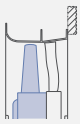	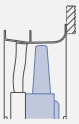	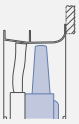		
Type **Article no.**	**ZN071-ZIL.GL.V7P4** **170426**	**ZN071-ZIL.GL.V7P4** **170349**	**ZN071-ZIL.GL.V7P4** **170350**	**ZN071-ZIH.GL.V7P4** **170424**	**ZN071-ZIH.GL.V7P4** **170425**
Weight kg	37.80	35.20	36.40	34.30	35.50

ZAplus attachable on both sides.

Control technology

Control modules	Sensor control modules	Add-on modules	Operating terminal
			
Page 452	Page 454	Page 463	Page 472

Design H - ZAplus Flattop, without guard grille

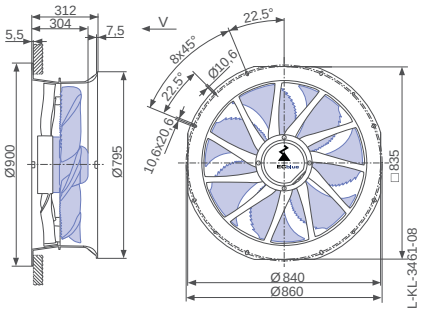

Design H - ZAplus Flattop, guard grille pressure side

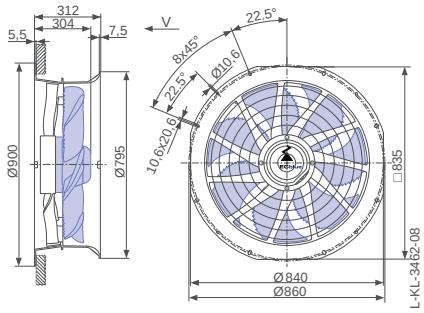

FE2owlet-ECblue with ZAplus

for single phase alternating current, 200-277 V

ZN080



Characteristic curve

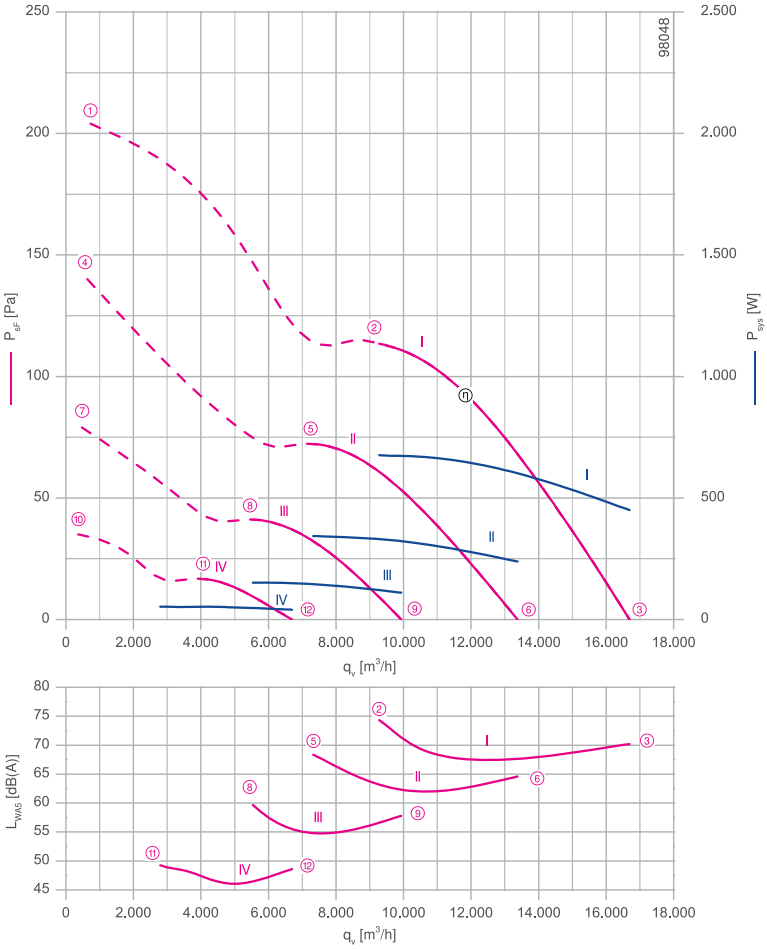

Measured in ZAplus without guard grille in installation type A according to ISO 5801

Description

Motor technology: EC
Rated voltage U_N: **1~ 200-277 V***
Rated frequency f_N: **50/60 Hz***
Input power P_{sys}: **0.70 kW***
Rated current I_N: **3.60- 2.60 A***
Rated speed n_N: **650 min^{-1}***
Thermal class: **THCL155***
Min. permitted ambient temperature $t_{R(min)}$: -35 °C
Max. permitted ambient temperature $t_{R(max)}$: 55 °C
Electrical connection: integrated Controller
Number of blades: 5
Protection class: IP54
Motor protection: Integrated active temperature management
Blades: High Performance Composite Material, uncoated, black
Rotor: Steel, 2 coat paint, ultramarine blue
Conformity: ErP 2015, CE, UL
ErP-data
Efficiency η_{statA}: 53.5 %
Efficiency: N_{actual} = 61.0 / N_{target} = 40**
EC controller integrated
* Rated data
**ErP 2015

Connection diagram Page 530
1360-403

System components Page 430

Dimensions mm

Airflow direction

Design L - ZAplus Ontop, guard grille suction side

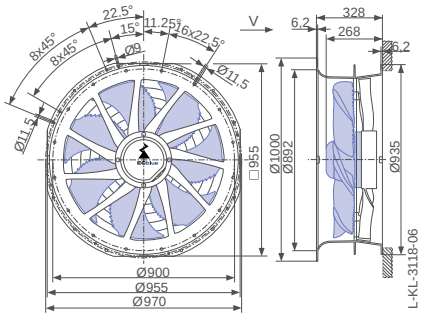

Airflow direction

Design L - ZAplus Ontop without guard grille

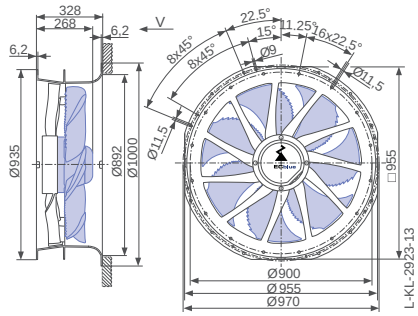

Design L - ZAplus Ontop, guard grille pressure side

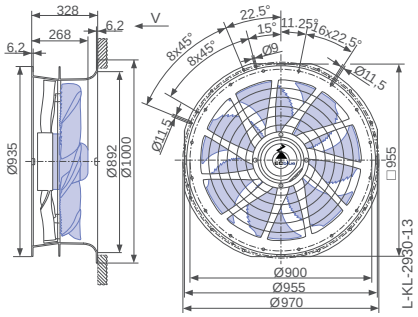

Performance data

Type	Characteristic curve	Speed n min⁻¹	Operating point	Current I A	Input power P_{sys} W	Suction side sound power level L_{WA5} dB(A)	Maximum ambient temperature t_R °C
ZN080-ZI_.DG.V5P4	I	650	①	4.40	960		55
			②	3.10	680	75	
			③	2.10	440	70	
	II	520	④	2.50	540		60
			⑤	1.65	340	69	
			⑥	1.15	240	65	
	III	390	⑦	1.10	230		
			⑧	0.72	150	60	
			⑨	0.56	110	58	
	IV	260	⑩	0.42	75		
			⑪	0.33	55	49	
			⑫	0.42	40	49	

Current values determined at 230V

Fan ordering information

Airflow direction ◀ Airflow direction

Design	L (guard grille suction side) Ontop	L (without guard grille) Ontop	L (guard grille pressure side) Ontop	Q (without guard grille)	Q (guard grille pressure side)	H (guard grille pressure side) Flattop
	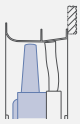		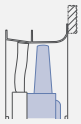		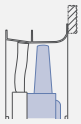	
Type	**ZN080-ZIL.DG.V5P4**	**ZN080-ZIL.DG.V5P4**	**ZN080-ZIL.DG.V5P4**	**ZN080-ZIQ.DG.V5P4**	**ZN080-ZIQ.DG.V5P4**	**ZN080-ZIH.DG.V5P4**
Article no.	**169895**	**161467**	**161469**	**161397**	**161395**	**162219**
Weight kg	26.40	23.60	26.00	26.70	28.20	24.30

ZAplus attachable on both sides.

Control technology

Control modules	Sensor control modules	Add-on modules	Operating terminal
			
Page 452	Page 454	Page 463	Page 472

Design Q - ZAplus with adapter plate, without guard grille

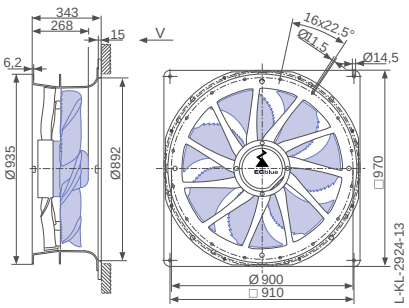

Design Q - ZAplus with adapter plate, guard grille pressure side

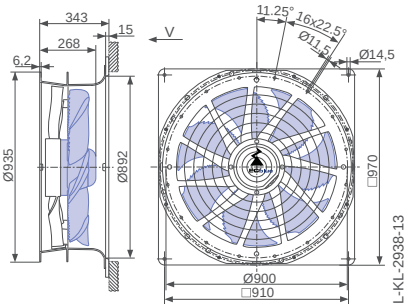

Design H - ZAplus Flattop, guard grille pressure side

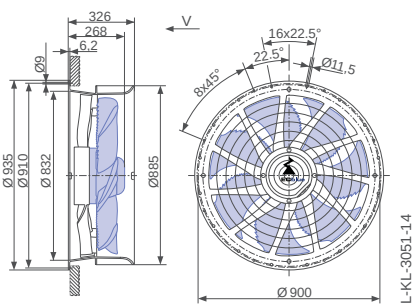

FE2owlet-ECblue with ZAplus

for three phase alternating current, 200-240 V

ZN080



Characteristic curve

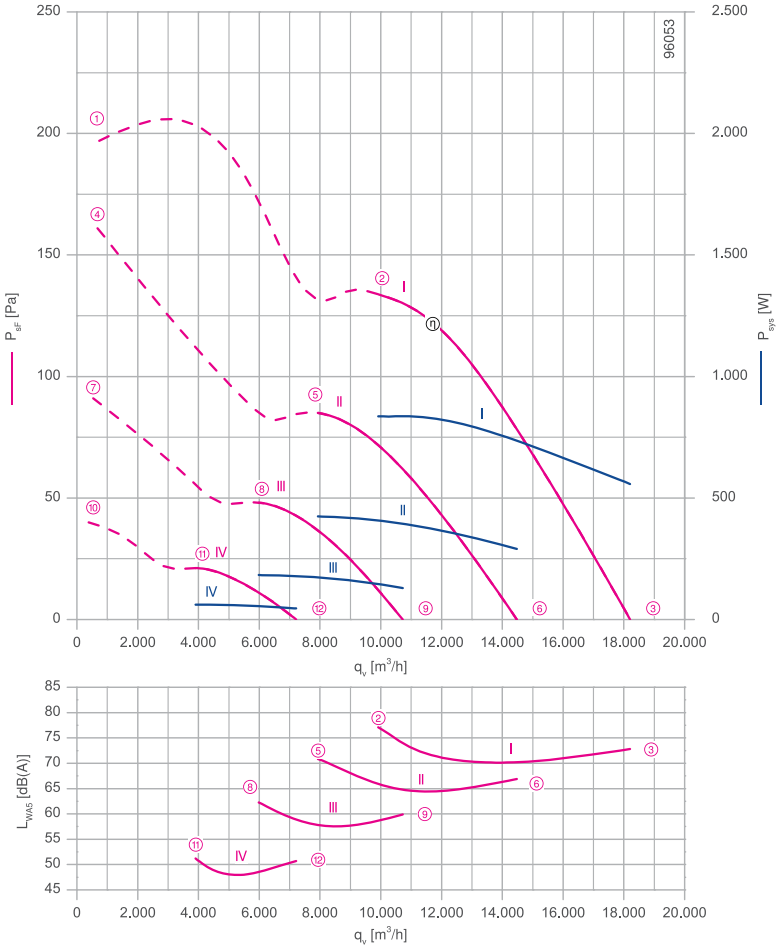

Measured in ZAplus without guard grille in installation type A according to ISO 5801

Description

Motor technology: EC
Rated voltage U: **3~ 200-240 V***
Rated frequency f: **50/60 Hz***
Motor input power P_{sys}: **0.86 kW***
Rated current I: **2.80- 2.30 A***
Rated speed n_{max}: **700 Min^{-1}***
Thermal class: **THCL155***
Min. permitted conveyor temperature $t_{R(min)}$: -35 °C
Max. permitted conveyor temperature $t_{R(max)}$: 45 °C
Electrical connection: integrated Controller
Number of blades: 5
Protection class: IP54
Motor protection: Integrated active temperature management
Blades: High Performance Composite Material, uncoated, black
Rotor: Steel, 2 coat paint, ultramarine blue
Conformity: ErP 2015, CE, UL
ErP-data
Efficiency η_{statA}: 54.5 %
Efficiency: N_{actual} = 61.3 / N_{target} = 40**
EC controller integrated
* Rated data
**ErP 2015

Connection diagram Page 530
1360-403

System components Page 430

Dimensions mm

Airflow direction

Design L - ZAplus Ontop, guard grille suction side

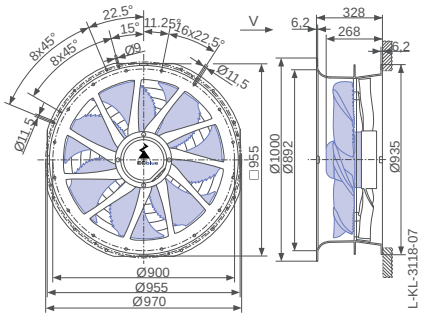

Airflow direction

Design L - ZAplus Ontop without guard grille

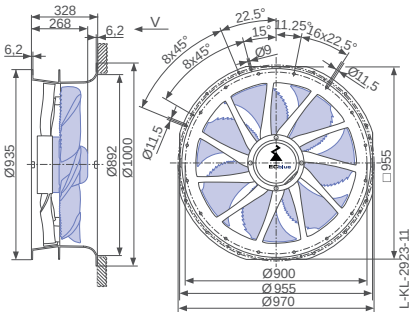

Design L - ZAplus Ontop, guard grille pressure side

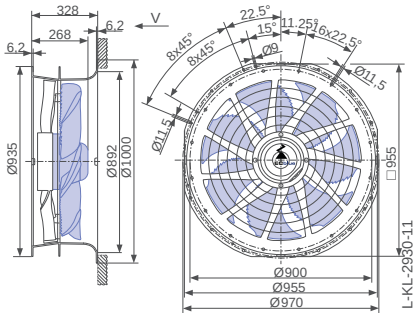

Performance data

Type	Characteristic curve	Speed n min⁻¹	Operating point	Current I A	Input power P_{sys} W	Suction side sound power level L_{WA5} dB(A)	Maximum ambient temperature t_R °C
ZN080-ZI_.DG.V5P4	I	700	①	2.60	900		45
			②	2.40	840	77	
			③	1.60	560	73	
	II	560	④	1.90	660		60
			⑤	1.25	420	71	
			⑥	0.88	290	67	
	III	420	⑦	0.86	280		
			⑧	0.58	180	63	
			⑨	0.44	130	60	
	IV	280	⑩	0.32	90		
			⑪	0.24	60	51	
			⑫	0.20	46	51	

Current values determined at 230V

Fan ordering information

Airflow direction | Airflow direction

Design	L (guard grille suction side) Ontop	L (without guard grille) Ontop	L (guard grille pressure side) Ontop	Q (without guard grille)	Q (guard grille pressure side)	H (guard grille pressure side) Flattop
	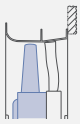		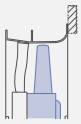		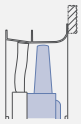	
Type	**ZN080-ZIL.DG.V5P4**	**ZN080-ZIL.DG.V5P4**	**ZN080-ZIL.DG.V5P4**	**ZN080-ZIQ.DG.V5P4**	**ZN080-ZIQ.DG.V5P4**	**ZN080-ZIH.DG.V5P4**
Article no.	**169894**	**161463**	**161465**	**161387**	**161385**	**162215**
Weight kg	26.40	23.60	26.00	26.70	28.20	24.30

ZAplus attachable on both sides.

Control technology

Control modules	Sensor control modules	Add-on modules	Operating terminal
			
Page 452	Page 454	Page 463	Page 472

Design Q - ZAplus with adapter plate, without guard grille

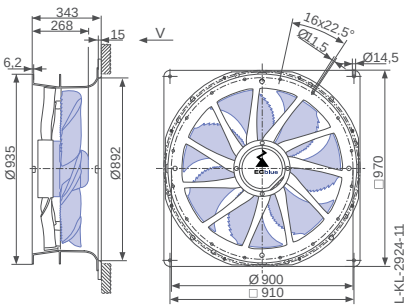

Design Q - ZAplus with adapter plate, guard grille pressure side

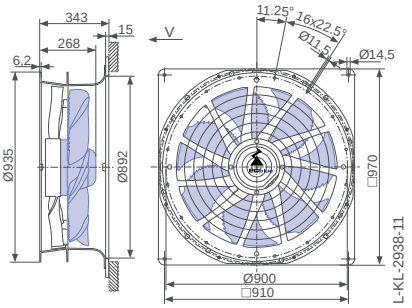

Design H - ZAplus Flattop, guard grille pressure side

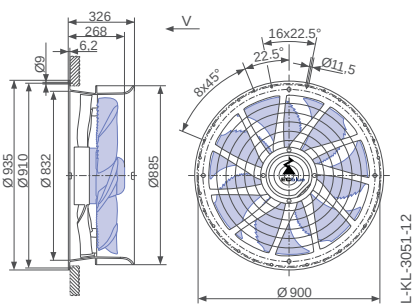

FE2owlet-ECblue with ZAplus

for three phase alternating current, 200-240 V

ZN080



Characteristic curve

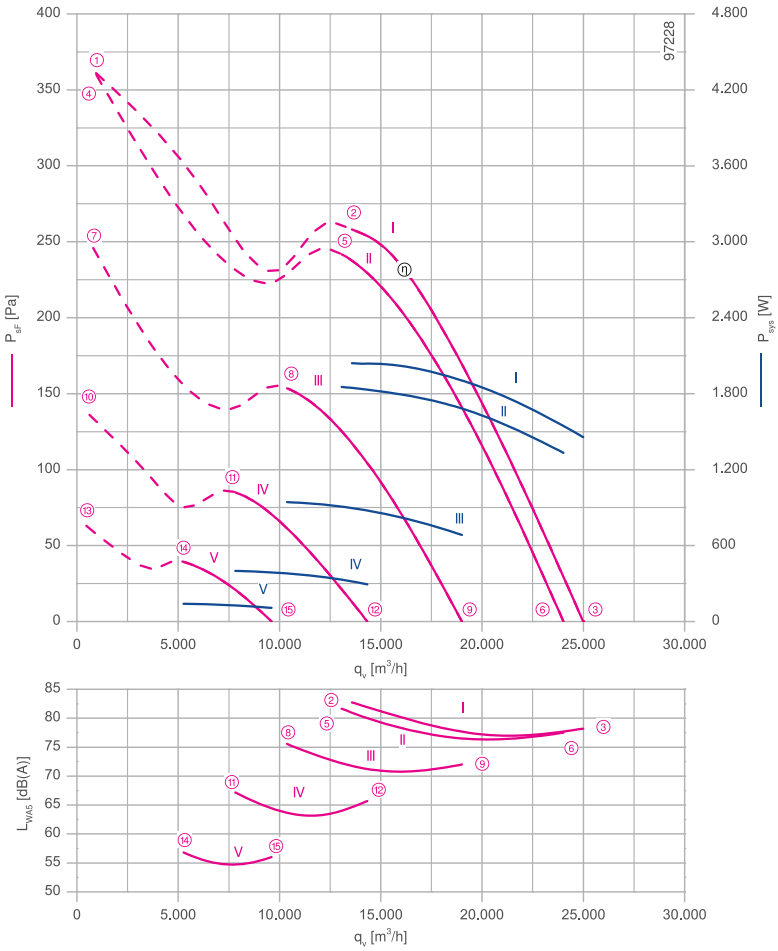

Measured in ZAplus without guard grille in installation type A according to ISO 5801

Description

Motor technology: EC
Rated voltage U_N: **3~ 200-240 V***
Rated frequency f_N: **50/60 Hz***
Input power P_{sys}: **2.10 kW***
Rated current I_N: **6.20- 5.20 A***
Rated speed n_N: **970 min^{-1}***
Thermal class: **THCL155***
Min. permitted ambient temperature $t_{R(min)}$: -35 °C
Max. permitted ambient temperature $t_{R(max)}$: 50 °C
Electrical connection: integrated Controller
Number of blades: 7
Protection class: IP54
Motor protection: Integrated active temperature management
Blades: Aluminium, uncoated
Rotor: Steel, 2 coat paint, ultramarine blue
Conformity: ErP 2015, CE, UL
ErP-data
Efficiency η_{statA}: 55.9 %
Efficiency: N_{actual} = 60.3 / N_{target} = 40**
EC controller integrated
* Rated data
**ErP 2015

Connection diagram Page 530
1360-403

System components Page 430

Dimensions mm

Airflow direction

Design L - ZAplus Ontop, guard grille suction side

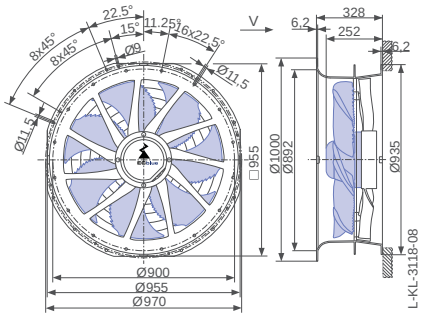

Airflow direction

Design L - ZAplus Ontop without guard grille

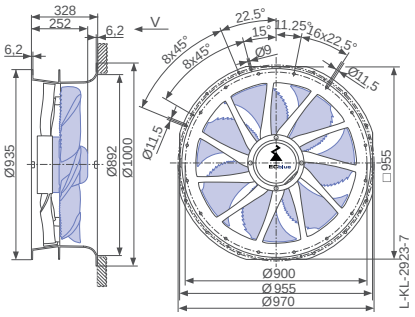

Design L - ZAplus Ontop, guard grille pressure side

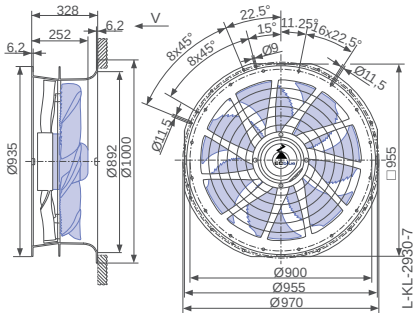

Performance data

Type	Characteristic curve	Speed n min⁻¹	Operating point	Current I A	Input power P_{sys} W	Suction side sound power level L_{WA5} dB(A)	Maximum ambient temperature t_R °C
ZN080-ZI_.GG.V7P3	I	970	①	6.40	2400		50
			②	5.40	2000	83	
			③	3.80	1450	78	
	II	940	④	6.40	2400		55
			⑤	4.80	1850	82	
			⑥	3.50	1350	78	
	III	750	⑦	3.50	1350		60
			⑧	2.50	940	76	
			⑨	1.85	680	72	
	IV	560	⑩	1.50	560		
			⑪	1.10	400	67	
			⑫	0.86	290	66	
	V	380	⑬	0.60	190		
			⑭	0.50	140	57	
			⑮	0.44	110	56	

Current values determined at 230V

Fan ordering information

Airflow direction ◀ ▶ Airflow direction

Design	L (guard grille suction side) Ontop	L (without guard grille) Ontop	L (guard grille pressure side) Ontop	Q (without guard grille)	Q (guard grille pressure side)	H (guard grille pressure side) Flattop
	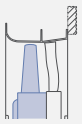		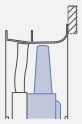	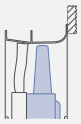	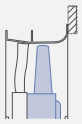	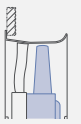
Type **Article no.**	**ZN080-ZIL.GG.V7P3** **169893**	**ZN080-ZIL.GG.V7P3** **161513**	**ZN080-ZIL.GG.V7P3** **161515**	**ZN080-ZIQ.GG.V7P3** **161521**	**ZN080-ZIQ.GG.V7P3** **161519**	**ZN080-ZIH.GG.V7P3** **162235**
Weight kg	39.70	37.00	38.50	40.10	41.60	36.80

ZAplus attachable on both sides.

Control technology

Control modules	Sensor control modules	Add-on modules	Operating terminal
			
Page 452	Page 454	Page 463	Page 472

Design Q - ZAplus with adapter plate, without guard grille

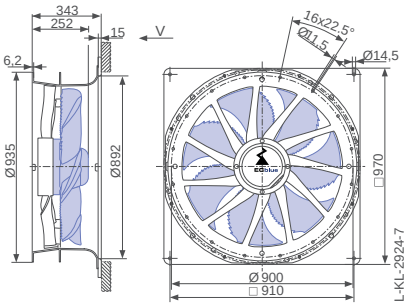

Design Q - ZAplus with adapter plate, guard grille pressure side

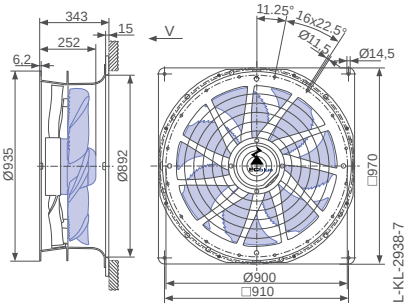

Design H - ZAplus Flattop, guard grille pressure side

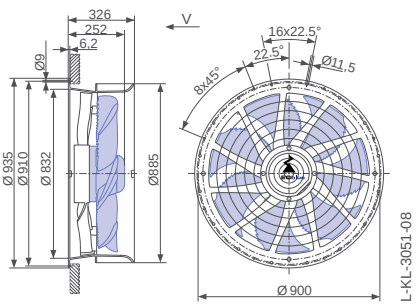

FE2owlet-ECblue with ZAplus

for three phase alternating current, 200-240 V

ZN080



Characteristic curve

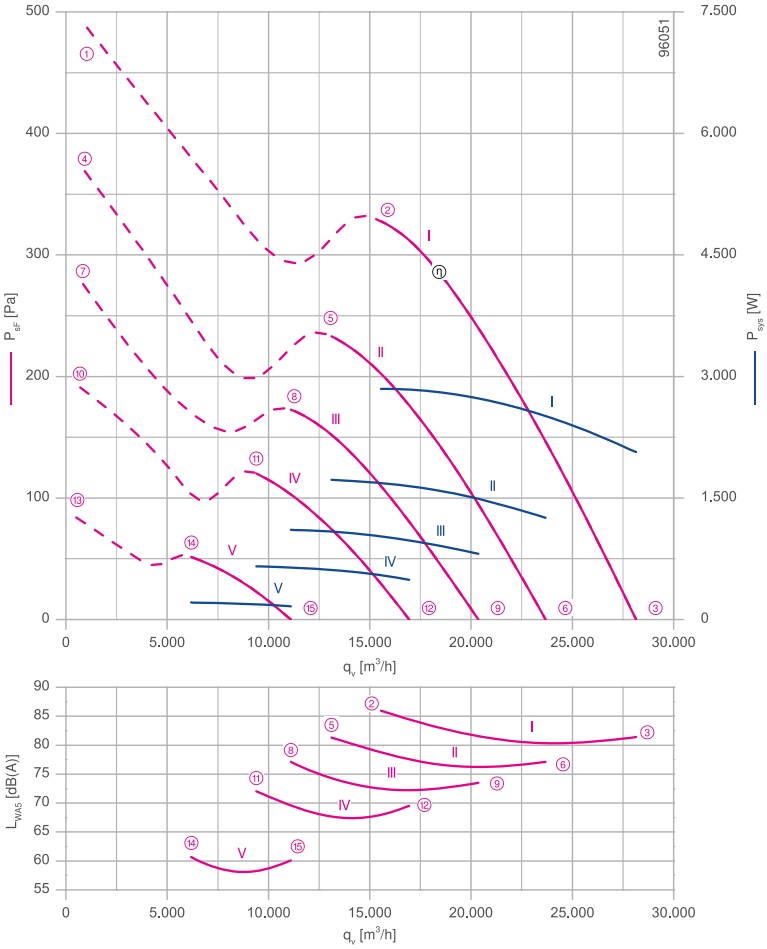

Measured in ZAplus without guard grille in installation type A according to ISO 5801

Description

Motor technology: EC
Rated voltage U: **3~ 200-240 V***
Rated frequency f: **50/60 Hz***
Motor input power P_{sys}: **2.90 kW***
Rated current I: **8.60- 7.20 A***
Rated speed n_{max}: **1100 Min^{-1}***
Thermal class: **THCL155***
Min. permitted conveyor temperature $t_{R(min)}$: -35 °C
Max. permitted conveyor temperature $t_{R(max)}$: 40 °C
Electrical connection: integrated Controller
Number of blades: 7
Protection class: IP54
Motor protection: Integrated active temperature management
Blades: Aluminium, uncoated
Rotor: Steel, 2 coat paint, ultramarine blue
Conformity: ErP 2015, CE, UL
ErP-data
Efficiency η_{statA}: 55.8 %
Efficiency: N_{actual} = 59.3 / N_{target} = 40**
EC controller integrated
* Rated data
**ErP 2015

Connection diagram Page 530
1360-403

System components Page 430

Dimensions mm

Airflow direction

Design L - ZAplus Ontop, guard grille suction side

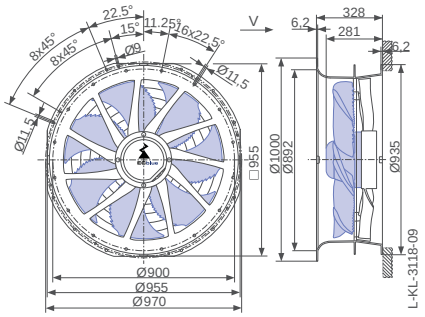

Airflow direction

Design L - ZAplus Ontop without guard grille

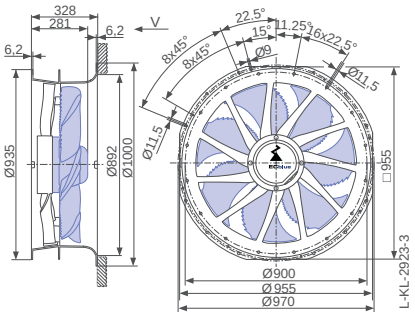

Design L - ZAplus Ontop, guard grille pressure side

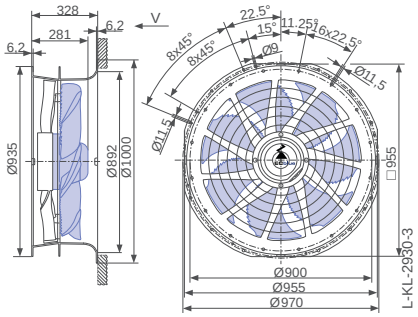

Performance data

Type	Characteristic curve	Speed n min⁻¹	Operating point	Current I A	Input power P_{sys} W	Suction side sound power level L_{WA5} dB(A)	Maximum ambient temperature t_R °C
ZN080-ZI_.GL.V7P3	I	1100	①	9.80	3700		40
			②	7.60	2800	86	
			③	5.40	2100	81	
	II	930	④	6.40	2400		60
			⑤	4.60	1700	82	
			⑥	3.30	1250	77	
	III	800	⑦	4.20	1550		
			⑧	2.90	1100	77	
			⑨	2.20	820	74	
	IV	670	⑩	2.40	920		
			⑪	1.80	660	72	
			⑫	1.35	500	70	
	V	440	⑬	0.84	280		
			⑭	0.66	210	61	
			⑮	0.54	160	60	

Current values determined at 230V

Fan ordering information

Airflow direction ▶ ◀ Airflow direction

Design	L (guard grille suction side) Ontop	L (without guard grille) Ontop	L (guard grille pressure side) Ontop	Q (without guard grille)	Q (guard grille pressure side)	H (guard grille pressure side) Flattop
	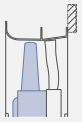	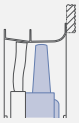	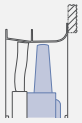	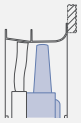	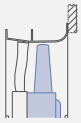	
Type Article no.	**ZN080-ZIL.GL.V7P3 169892**	**ZN080-ZIL.GL.V7P3 161475**	**ZN080-ZIL.GL.V7P3 161477**	**ZN080-ZIQ.GL.V7P3 161417**	**ZN080-ZIQ.GL.V7P3 161415**	**ZN080-ZIH.GL.V7P3 162227**
Weight kg	43.90	41.20	42.70	44.30	45.80	41.00

ZAplus attachable on both sides.

Control technology

Control modules	Sensor control modules	Add-on modules	Operating terminal
			
Page 452	Page 454	Page 463	Page 472

Design Q - ZAplus with adapter plate, without guard grille

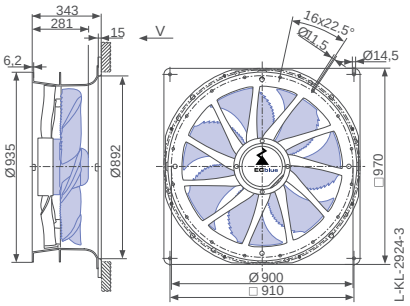

Design Q - ZAplus with adapter plate, guard grille pressure side

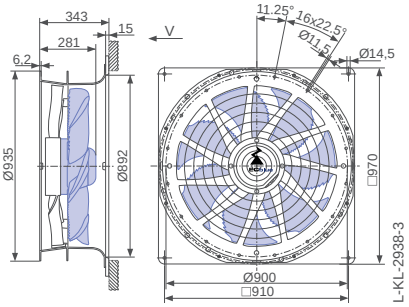

Design H - ZAplus Flattop, guard grille pressure side

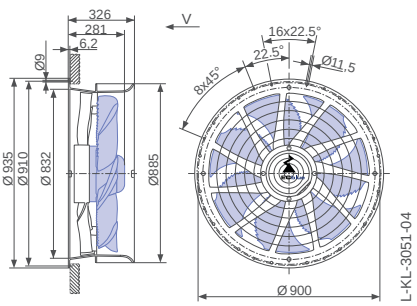

FE2owlet-ECblue with ZAplus

for three phase alternating current, 380-480 V

ZN080



Characteristic curve

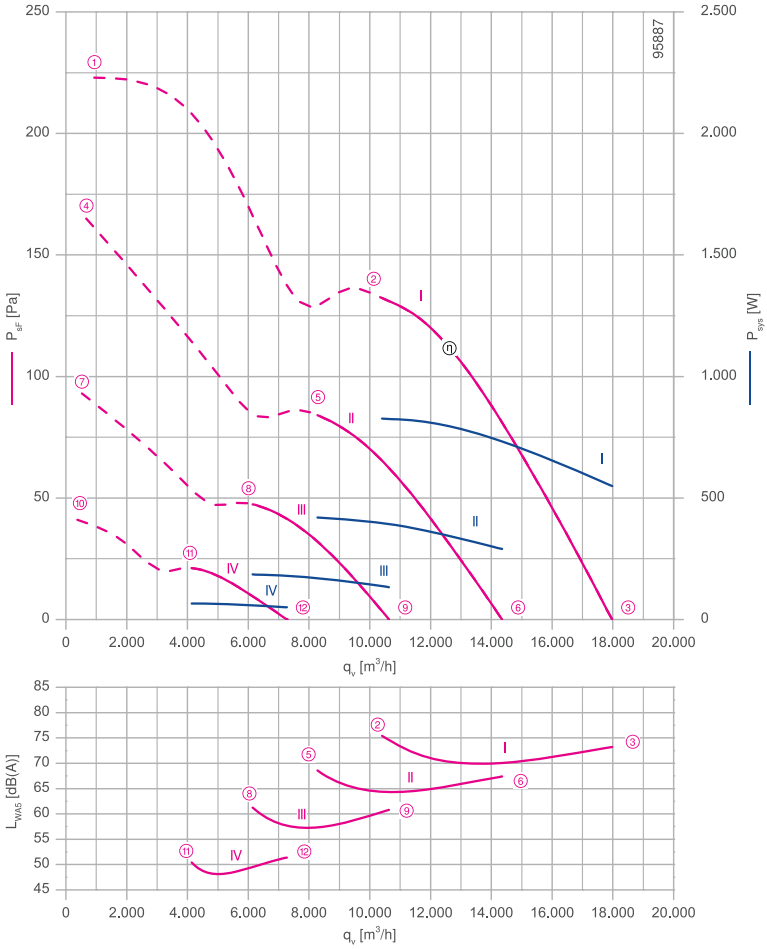

Measured in ZAplus without guard grille in installation type A according to ISO 5801

Description

Motor technology: EC
Rated voltage U: **3~ 380-480 V***
Rated frequency f: **50/60 Hz***
Motor input power P_{sys}: **0.84 kW***
Rated current I: **1.45- 1.15 A***
Rated speed n_{max}: **700 Min^{-1}***
Thermal class: **THCL155***
Min. permitted conveyor temperature $t_{R(min)}$: -35 °C
Max. permitted conveyor temperature $t_{R(max)}$: 55 °C
Electrical connection: integrated Controller
Number of blades: 5
Protection class: IP54
Motor protection: Integrated active temperature management
Blades: High Performance Composite Material, uncoated, black
Rotor: Steel, 2 coat paint, ultramarine blue
Conformity: ErP 2015, CE, UL
ErP-data
Efficiency η_{statA}: 55.3 %
Efficiency: N_{actual} = 62.3 / N_{target} = 40**
EC controller integrated
* Rated data
**ErP 2015

Connection diagram Page 530
1360-403

System components Page 430

Dimensions mm

Airflow direction

Design L - ZAplus Ontop, guard grille suction side

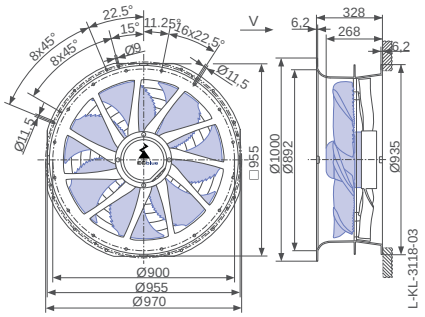

Airflow direction

Design L - ZAplus Ontop without guard grille

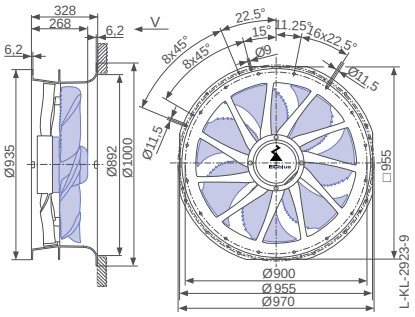

Design L - ZAplus Ontop, guard grille pressure side

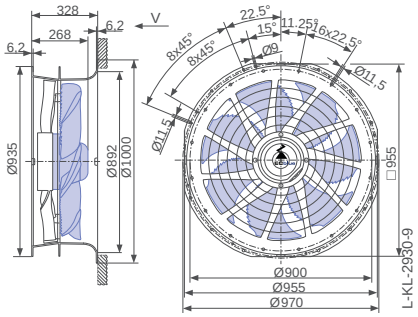

Performance data

Type	Characteristic curve	Speed n min⁻¹	Operating point	Current I A	Input power P_{sys} W	Suction side sound power level L_{WA5} dB(A)	Maximum ambient temperature t_R °C
ZN080-ZI_.DG._5P4	I	700	①	1.70	1100		55
			②	1.35	820	76	
			③	0.98	540	73	
	II	560	④	1.15	660		60
			⑤	0.84	420	69	
			⑥	0.64	290	67	
	III	420	⑦	0.66	280		
			⑧	0.50	180	61	
			⑨	0.40	130	61	
	IV	280	⑩	0.33	95		
			⑪	0.27	65	51	
			⑫	0.23	50	51	

Current values determined at 400V

Fan ordering information

Airflow direction	Airflow direction					
Design	L (guard grille suction side) Ontop	L (without guard grille) Ontop	L (guard grille pressure side) Ontop	Q (without guard grille)	Q (guard grille pressure side)	H (guard grille pressure side) Flattop
	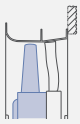		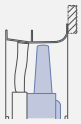		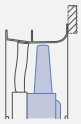	
Type	**ZN080-ZIL.DG.V5P4**	**ZN080-ZIL.DG.V5P4**	**ZN080-ZIL.DG.V5P4**	**ZN080-ZIQ.DG.V5P4**	**ZN080-ZIQ.DG.V5P4**	**ZN080-ZIH.DG.V5P4**
Article no.	**165319**	**161459**	**161461**	**160026**	**160024**	**162211**
Weight kg	26.40	23.60	26.00	26.70	28.20	24.30

ZAplus attachable on both sides.

Control technology

Control modules	Sensor control modules	Add-on modules	Operating terminal
			
Page 452	Page 454	Page 463	Page 472

Design Q - ZAplus with adapter plate, without guard grille

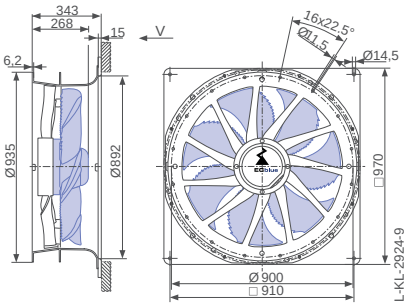

Design Q - ZAplus with adapter plate, guard grille pressure side

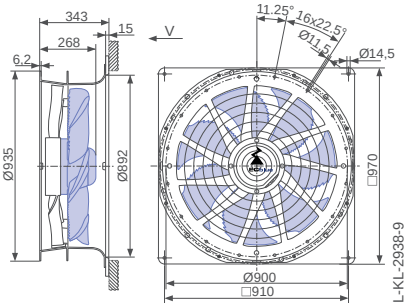

Design H - ZAplus Flattop, guard grille pressure side

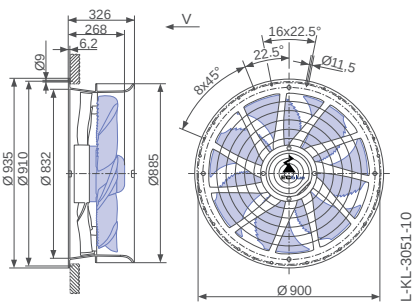

FE2owlet-ECblue with ZAplus

for three phase alternating current, 380-480 V

ZN080



Description

Motor technology: EC
Rated voltage U: **3~ 380-480 V***
Rated frequency f: **50/60 Hz***
Motor input power P_{sys}: **1.85 kW***
Rated current I: **3.00- 2.40 A***
Rated speed n_{max}: **950 Min^{-1}***
Thermal class: **THCL155***
Min. permitted conveyor temperature $t_{R(min)}$: -35 °C
Max. permitted conveyor temperature $t_{R(max)}$: 60 °C
Electrical connection: integrated Controller
Number of blades: 7
Protection class: IP54
Motor protection: Integrated active temperature management
Blades: Aluminium, uncoated
Rotor: Steel, 2 coat paint, ultramarine blue
Conformity: ErP 2015, CE, UL
ErP-data
Efficiency η_{statA}: 57.4 %
Efficiency: N_{actual} = 62.1 / N_{target} = 40**
EC controller integrated
* Rated data
**ErP 2015

Characteristic curve

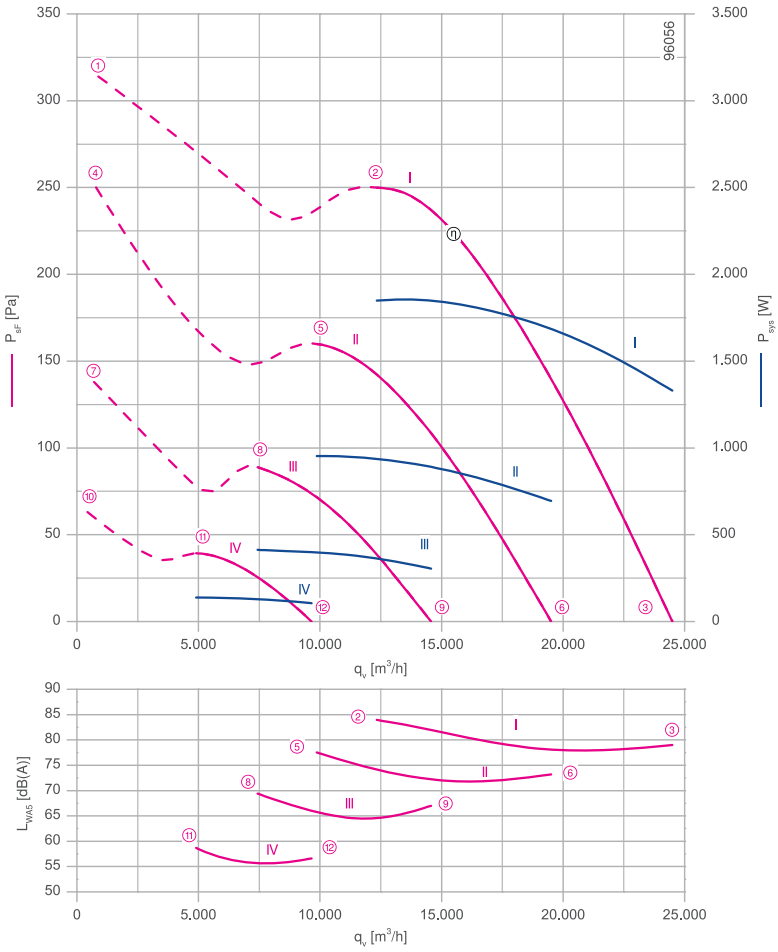

Measured in ZAplus without guard grille in installation type A according to ISO 5801

Connection diagram Page 530
1360-403

System components Page 430

Dimensions mm

Airflow direction

Design L - ZAplus Ontop, guard grille suction side

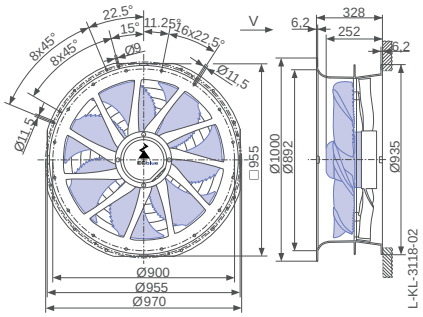

Airflow direction

Design L - ZAplus Ontop without guard grille

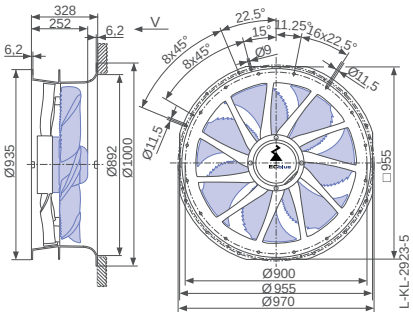

Design L - ZAplus Ontop, guard grille pressure side

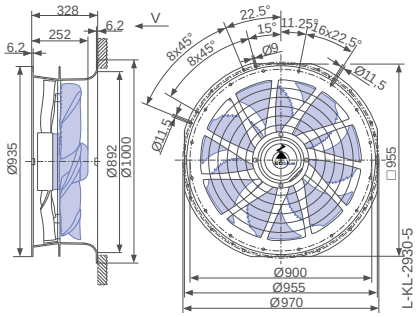

Performance data

Type	Characteristic curve	Speed n min⁻¹	Operating point	Current I A	Input power P_{sys} W	Suction side sound power level L_{WA5} dB(A)
ZN080-ZI_.GG.V7P3	I	950	①	2.90	1900	
			②	2.80	1850	84
			③	2.10	1350	79
	II	760	④	2.10	1350	
			⑤	1.55	960	78
			⑥	1.20	700	73
	III	570	⑦	1.00	560	
			⑧	0.82	420	70
			⑨	0.68	300	67
	IV	380	⑩	0.50	180	
			⑪	0.42	140	59
			⑫	0.35	110	57

Current values determined at 400V

Fan ordering information

Airflow direction → Airflow direction

Design	L (guard grille suction side) Ontop	L (without guard grille) Ontop	L (guard grille pressure side) Ontop	Q (without guard grille)	Q (guard grille pressure side)	H (guard grille pressure side) Flattop
	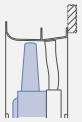					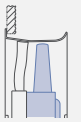
Type **Article no.**	**ZN080-ZIL.GG.V7P3** **165321**	**ZN080-ZIL.GG.V7P3** **161493**	**ZN080-ZIL.GG.V7P3** **161495**	**ZN080-ZIQ.GG.V7P3** **161501**	**ZN080-ZIQ.GG.V7P3** **161499**	**ZN080-ZIH.GG.V7P3** **162231**
Weight kg	39.70	37.00	38.50	40.10	41.60	36.80

ZAplus attachable on both sides.

Control technology

Control modules	Sensor control modules	Add-on modules	Operating terminal
			
Page 452	Page 454	Page 463	Page 472

Design Q - ZAplus with adapter plate, without guard grille

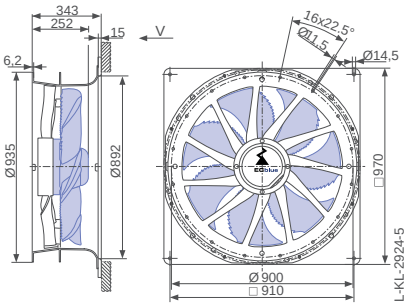

Design Q - ZAplus with adapter plate, guard grille pressure side

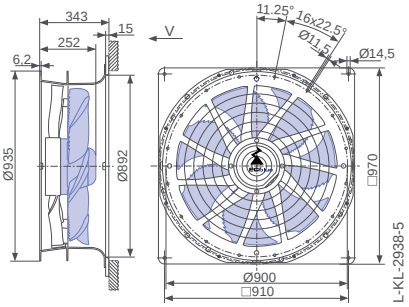

Design H - ZAplus Flattop, guard grille pressure side

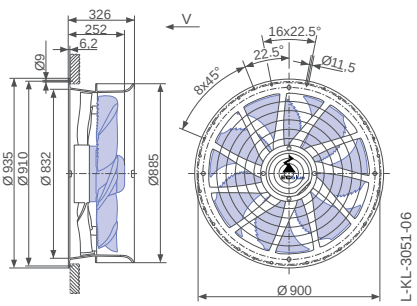

FE2owlet-ECblue with ZAplus

for three phase alternating current, 380-480 V

ZN080



Description

Motor technology: EC
Rated voltage U_N: **3~ 380-480 V***
Rated frequency f_N: **50/60 Hz***
Input power P_{sys}: **2.80 kW***
Rated current I_N: **4.40- 3.50 A***
Rated speed n_N: **1100 min^{-1}***
Thermal class: **THCL155***
Min. permitted ambient temperature $t_{R(min)}$: -35 °C
Max. permitted ambient temperature $t_{R(max)}$: 55 °C
Electrical connection: integrated Controller
Number of blades: 7
Protection class: IP54
Motor protection: Integrated active temperature management
Blades: Aluminium, uncoated
Rotor: Steel, 2 coat paint, ultramarine blue
Conformity: ErP 2015, CE, UL
ErP-data
Efficiency η_{statA}: 58.0 %
Efficiency: N_{actual} = 61.6 / N_{target} = 40**
EC controller integrated
* Rated data
**ErP 2015

Characteristic curve

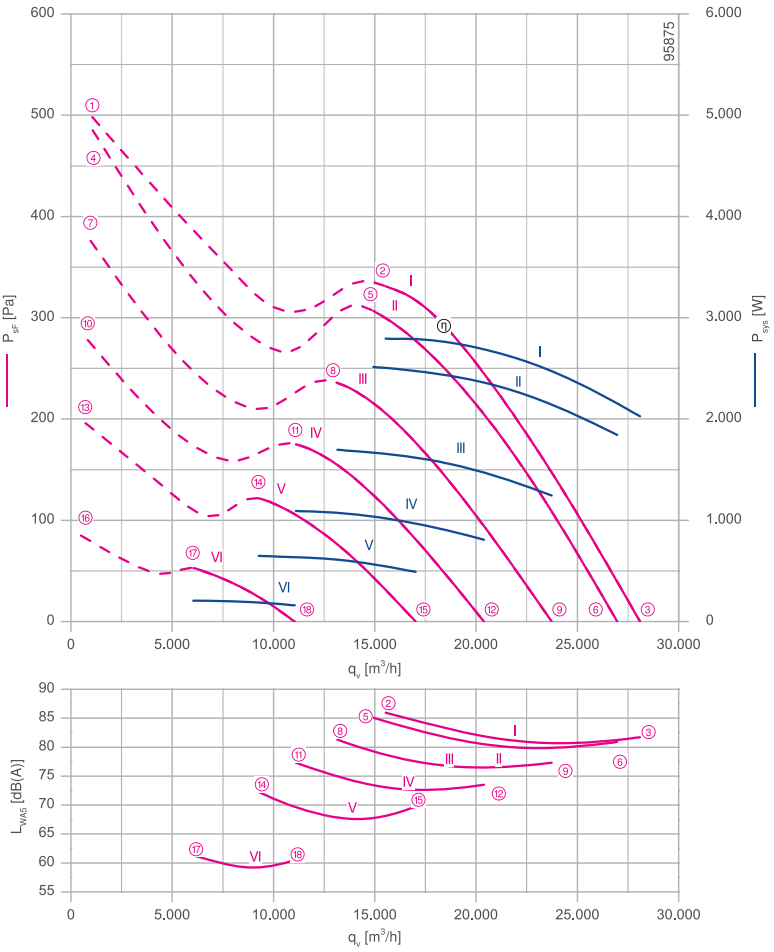

Measured in ZAplus without guard grille in installation type A according to ISO 5801

Connection diagram Page 530
1360-403

System components Page 430

Dimensions mm

Airflow direction

Design L - ZAplus Ontop, guard grille suction side

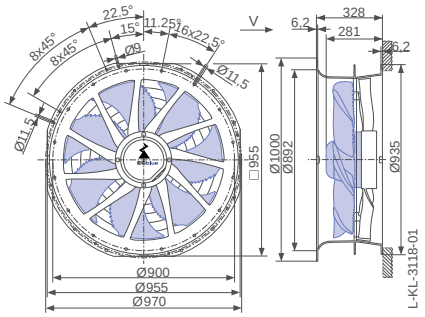

Airflow direction

Design L - ZAplus Ontop without guard grille

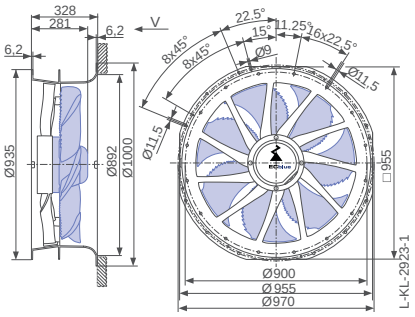

Design L - ZAplus Ontop, guard grille pressure side

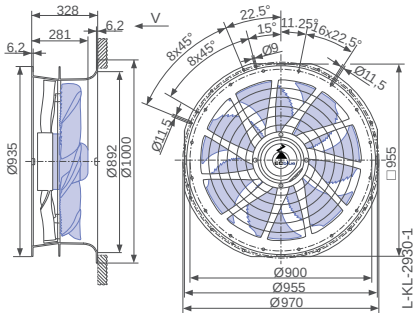

Performance data

Type	Characteristic curve	Speed n min⁻¹	Operating point	Current I A	Input power P_{sys} W	Suction side sound power level L_{WA5} dB(A)	Maximum ambient temperature t_R °C
ZN080-ZI_.GL.V7P3	I	1100	①	5.60	3700		55
			②	4.20	2800	86	
			③	3.10	2000	82	
	II	1060	④	5.40	3600		60
			⑤	3.80	2500	85	
			⑥	2.80	1850	81	
	III	930	⑦	3.70	2400		
			⑧	2.60	1700	81	
			⑨	1.95	1250	77	
	IV	800	⑩	2.40	1550		
			⑪	1.75	1100	77	
			⑫	1.35	800	74	
	V	670	⑬	1.50	920		
			⑭	1.15	640	72	
			⑮	0.90	500	70	
	VI	440	⑯	0.64	280		
			⑰	0.52	210	61	
			⑱	0.44	160	61	

Current values determined at 400V

Fan ordering information

Airflow direction		Airflow direction				
Design	L (guard grille suction side) Ontop	L (without guard grille) Ontop	L (guard grille pressure side) Ontop	Q (without guard grille)	Q (guard grille pressure side)	H (guard grille pressure side) Flattop
	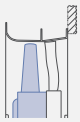		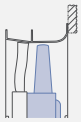		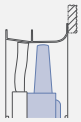	
Type **Article no.**	**ZN080-ZIL.GL.V7P3** **165320**	**ZN080-ZIL.GL.V7P3** **161471**	**ZN080-ZIL.GL.V7P3** **161473**	**ZN080-ZIQ.GL.V7P3** **161407**	**ZN080-ZIQ.GL.V7P3** **161405**	**ZN080-ZIH.GL.V7P3** **162223**
Weight kg	43.90	41.20	42.70	44.30	45.80	41.00

ZAplus attachable on both sides.

Control technology

Control modules	Sensor control modules	Add-on modules	Operating terminal
			
Page 452	Page 454	Page 463	Page 472

Design Q - ZAplus with adapter plate, without guard grille

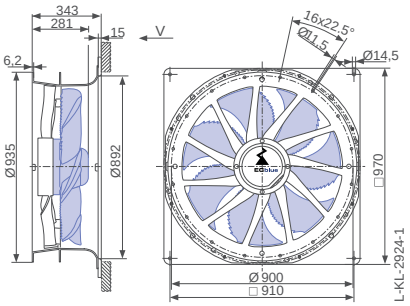

Design Q - ZAplus with adapter plate, guard grille pressure side

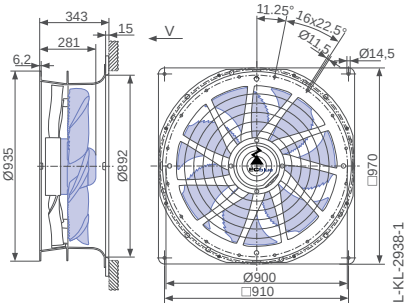

Design H - ZAplus Flattop, guard grille pressure side

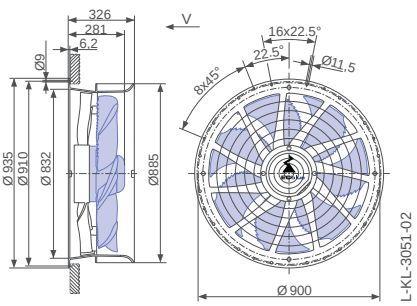

FE2owlet-ECblue with ZAplus

for single phase alternating current, 200-277 V

ZN091



Description

Motor technology: EC
Rated voltage U_N: **1~ 200-277 V***
Rated frequency f_N: **50/60 Hz***
Input power P_{sys}: **0.68 kW***
Rated current I_N: **3.50- 2.50 A***
Rated speed n_N: **570 min^{-1}***
Thermal class: **THCL155***
Min. permitted ambient temperature $t_{R(min)}$: -35 °C
Max. permitted ambient temperature $t_{R(max)}$: 45 °C
Electrical connection: integrated Controller
Number of blades: 4
Protection class: IP54
Motor protection: Integrated active temperature management
Blades: High Performance Composite Material, uncoated
Rotor: Steel, 2 coat paint, ultramarine blue
Conformity: ErP 2015, CE, UL
ErP-data
Efficiency η_{statA}: 54.6 %
Efficiency: N_{actual} = 62.2 / N_{target} = 40**
EC controller integrated
* Rated data
**ErP 2015

Characteristic curve

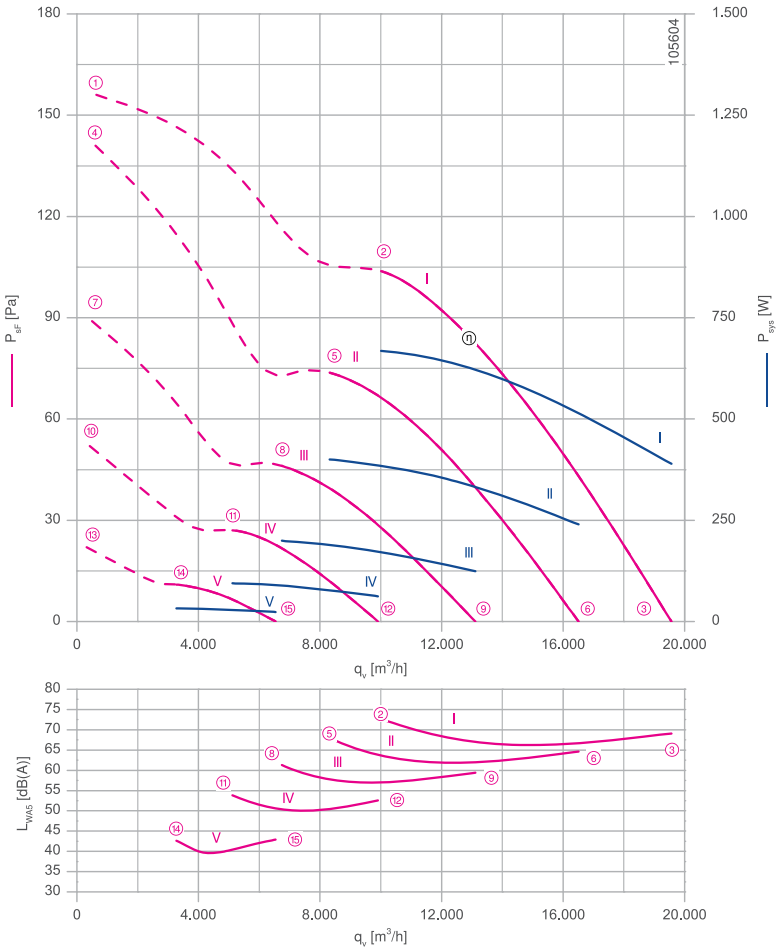

Measured in ZAplus without guard grille in installation type A according to ISO 5801

Connection diagram Page 530
1360-403

System components Page 430

Dimensions mm

Airflow direction

Design L - ZAplus Ontop, guard grille suction side

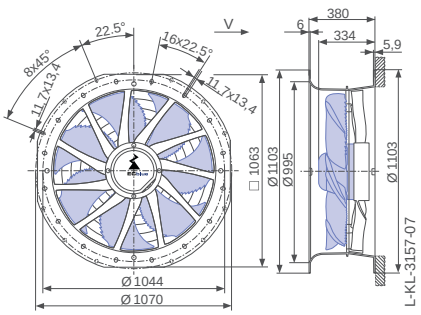

Airflow direction

Design L - ZAplus Ontop without guard grille

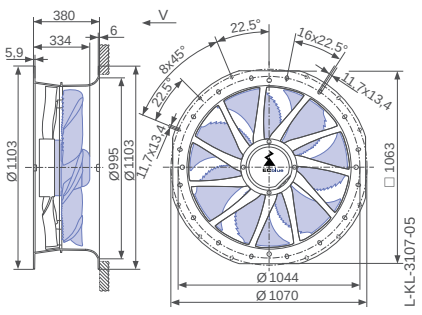

Design L - ZAplus Ontop, guard grille pressure side

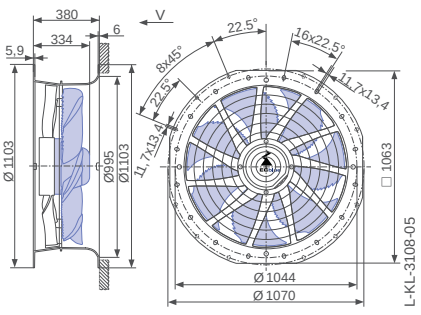

Performance data

Type	Characteristic curve	Speed n min⁻¹	Operating point	Current I A	Input power P_{sys} W	Suction side sound power level L_{WA5} dB(A)	Maximum ambient temperature t_R °C
ZN091-ZI_.DG.V4P3	I	570	①	3.70	820		45
			②	3.00	660	73	
			③	1.80	390	69	
	II	480	④	3.20	700		60
			⑤	1.85	400	67	
			⑥	1.15	240	65	
	III	380	⑦	1.55	340		
			⑧	0.96	200	62	
			⑨	0.62	120	59	
	IV	290	⑩	0.74	150		
			⑪	0.48	95	54	
			⑫	0.37	60	53	
	V	190	⑬	0.42	48		
			⑭	0.37	32	43	
			⑮	0.34	24	43	

Current values determined at 230V

Fan ordering information

Airflow direction ▶ ◀ Airflow direction

Design	L (guard grille suction side) Ontop	L (without guard grille) Ontop	L (guard grille pressure side) Ontop	Q (without guard grille)	Q (guard grille pressure side)	H (guard grille pressure side) Flattop
	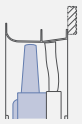		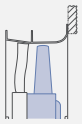	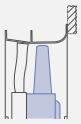	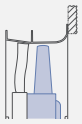	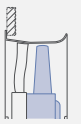
Type Article no.	**ZN091-ZIL.DG.V4P3 169898**	**ZN091-ZIL.DG.V4P3 164945**	**ZN091-ZIL.DG.V4P3 164947**	**ZN091-ZIQ.DG.V4P3 164951**	**ZN091-ZIQ.DG.V4P3 164953**	**ZN091-ZIH.DG.V4P3 164961**
Weight kg	31.40	27.60	29.50	31.50	33.40	29.50

Control technology

Control modules	Sensor control modules	Add-on modules	Operating terminal
			
Page 452	Page 454	Page 463	Page 472

Design Q - ZAplus with adapter plate, without guard grille

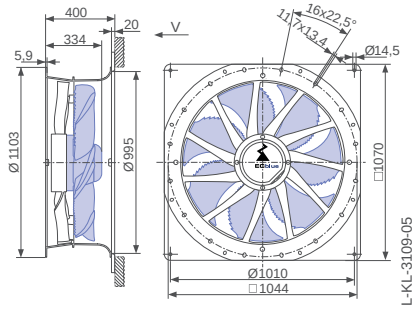

Design Q - ZAplus with adapter plate, guard grille pressure side

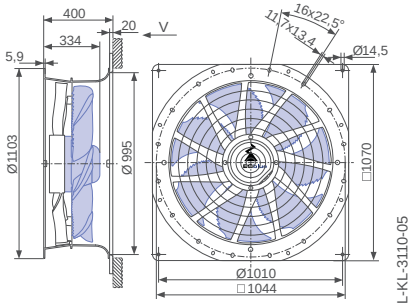

Design H - ZAplus Flattop, guard grille pressure side

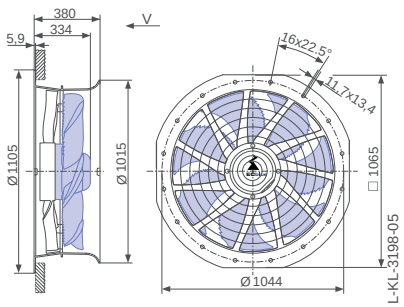

FE2owlet-ECblue with ZAplus

for three phase alternating current, 200-240 V

ZN091



Characteristic curve

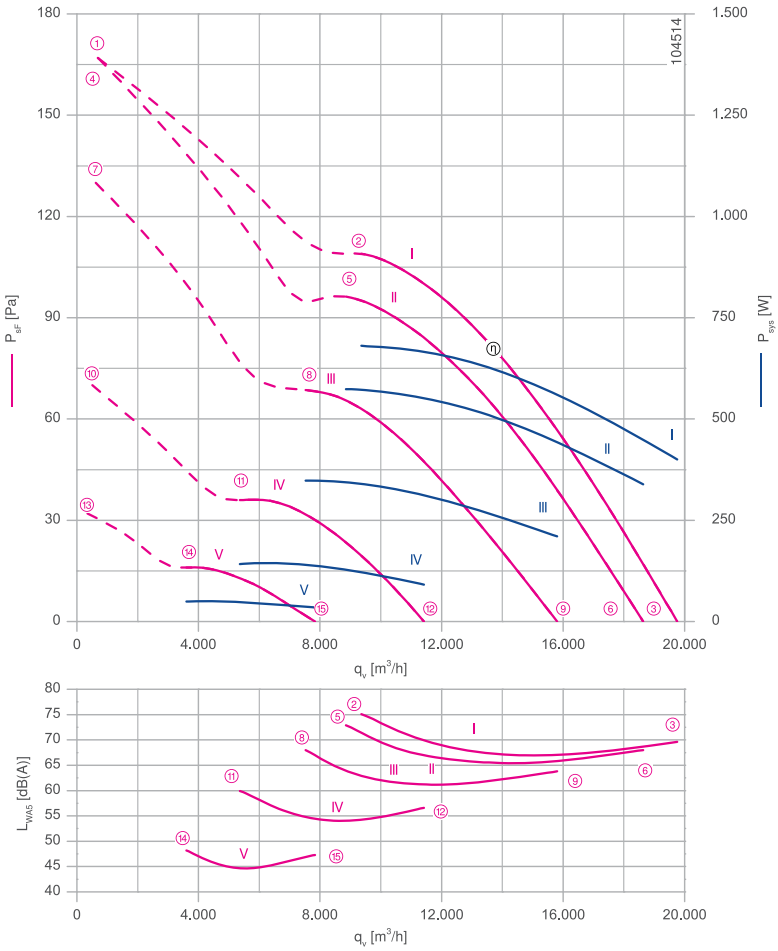

Measured in ZAplus without guard grille in installation type A according to ISO 5801

Description

Motor technology: EC
Rated voltage U_N: **3~ 200-240 V***
Rated frequency f_N: **50/60 Hz***
Input power P_{sys}: **0.68 kW***
Rated current I_N: **2.10- 1.80 A***
Rated speed n_N: **570 min^{-1}***
Thermal class: **THCL155***
Min. permitted ambient temperature $t_{R(min)}$: -35 °C
Max. permitted ambient temperature $t_{R(max)}$: 55 °C
Electrical connection: integrated Controller
Number of blades: 4
Protection class: IP54
Motor protection: Integrated active temperature management
Blades: High Performance Composite Material, uncoated
Rotor: Steel, 2 coat paint, ultramarine blue
Conformity: ErP 2015, CE, UL
ErP-data
Efficiency η_{statA}: 56.0 %
Efficiency: N_{actual} = 63.7 / N_{target} = 40**
EC controller integrated
* Rated data
**ErP 2015

Connection diagram Page 530
1360-403

System components Page 430

Dimensions mm

Airflow direction

Design L - ZAplus Ontop, guard grille suction side

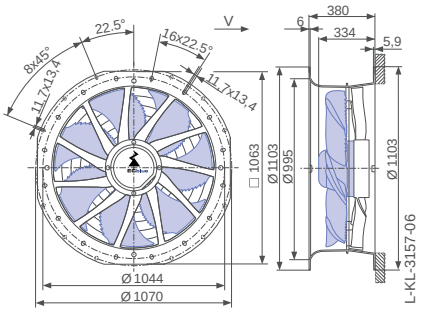

Airflow direction

Design L - ZAplus Ontop without guard grille

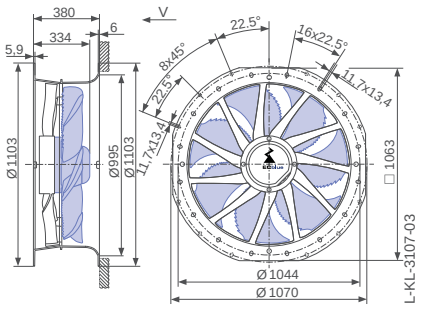

Design L - ZAplus Ontop, guard grille pressure side

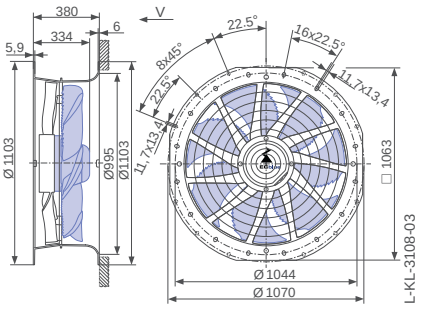

Performance data

Type	Characteristic curve	Speed n min⁻¹	Operating point	Current I A	Input power P_{sys} W	Suction side sound power level L_{WA5} dB(A)	Maximum ambient temperature t_R °C
ZN091-ZI_.DG.V4P3	I	570	①	2.40	900		55
			②	1.85	680	75	
			③	1.15	400	70	
	II	540	④	2.40	900		60
			⑤	1.60	580	73	
			⑥	1.00	340	68	
	III	460	⑦	1.65	600		
			⑧	1.00	350	68	
			⑨	0.68	210	64	
	IV	340	⑩	0.76	240		
			⑪	0.52	140	60	
			⑫	0.37	90	57	
	V	230	⑬	0.34	80		
			⑭	0.26	50	48	
			⑮	0.21	34	47	

Current values determined at 230V

Fan ordering information

Airflow direction ▶ ◀ Airflow direction

Design	L (guard grille suction side) Ontop	L (without guard grille) Ontop	L (guard grille pressure side) Ontop	Q (without guard grille)	Q (guard grille pressure side)	H (guard grille pressure side) Flattop
	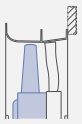		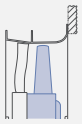	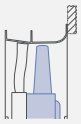	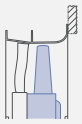	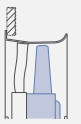
Type **Article no.**	**ZN091-ZIL.DG.V4P3** **169897**	**ZN091-ZIL.DG.V4P3** **164927**	**ZN091-ZIL.DG.V4P3** **164929**	**ZN091-ZIQ.DG.V4P3** **164933**	**ZN091-ZIQ.DG.V4P3** **164935**	**ZN091-ZIH.DG.V4P3** **164943**
Weight kg	31.40	27.60	29.50	31.50	33.40	29.50

ZAplus attachable on both sides.

Control technology

Control modules	Sensor control modules	Add-on modules	Operating terminal
			
Page 452	Page 454	Page 463	Page 472

Design Q - ZAplus with adapter plate, without guard grille

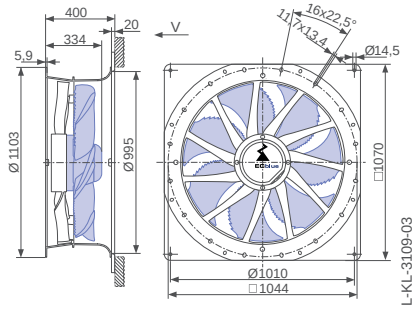

Design Q - ZAplus with adapter plate, guard grille pressure side

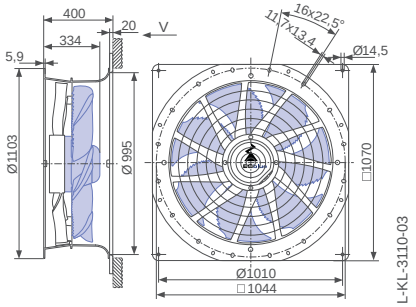

Design H - ZAplus Flattop, guard grille pressure side

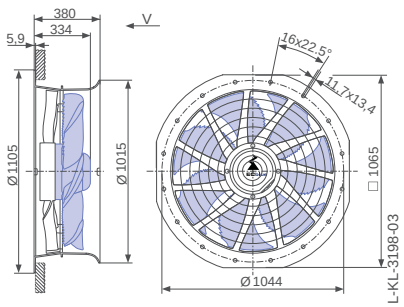

FE2owlet-ECblue with ZAplus

for three phase alternating current, 200-240 V

ZN091



Characteristic curve

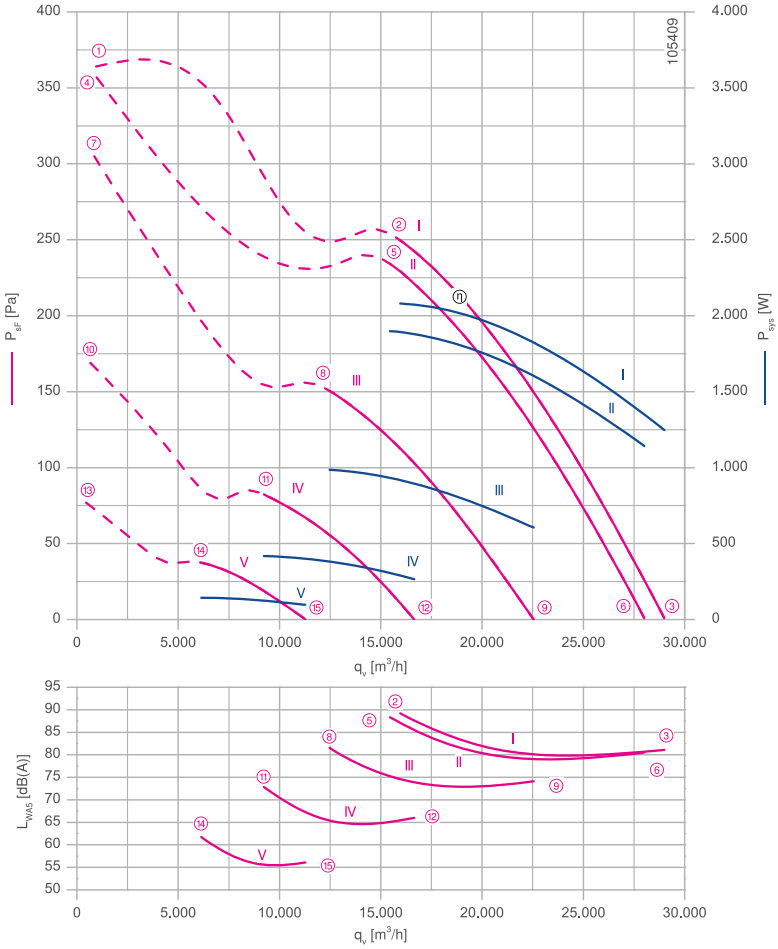

Measured in ZAplus without guard grille in installation type A according to ISO 5801

Description

Motor technology: EC
Rated voltage U_N: **3~ 200-240 V***
Rated frequency f_N: **50/60 Hz***
Input power P_{sys}: **2.10 kW***
Rated current I_N: **6.40- 5.40 A***
Rated speed n_N: **950 min^{-1}***
Thermal class: **THCL155***
Min. permitted ambient temperature $t_{R(min)}$: -35 °C
Max. permitted ambient temperature $t_{R(max)}$: 55 °C
Electrical connection: integrated Controller
Number of blades: 5
Protection class: IP54
Motor protection: Integrated active temperature management
Blades: Aluminium, uncoated
Rotor: Steel, 2 coat paint, ultramarine blue
Conformity: ErP 2015, CE, UL
ErP-data
Efficiency η_{statA}: 60.8 %
Efficiency: N_{actual} = 65.2 / N_{target} = 40**
EC controller integrated
* Rated data
**ErP 2015

Connection diagram Page 530
1360-403

System components Page 430

Dimensions mm

Airflow direction

Design L - ZAplus Ontop, guard grille suction side

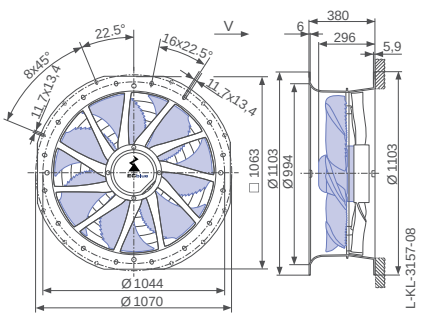

Airflow direction

Design L - ZAplus Ontop without guard grille

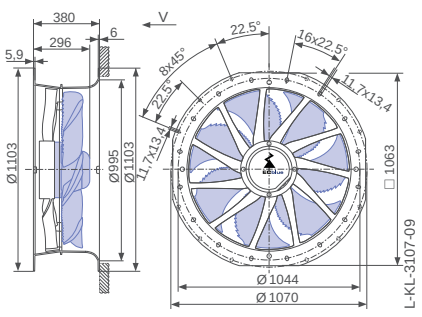

Design L - ZAplus Ontop, guard grille pressure side

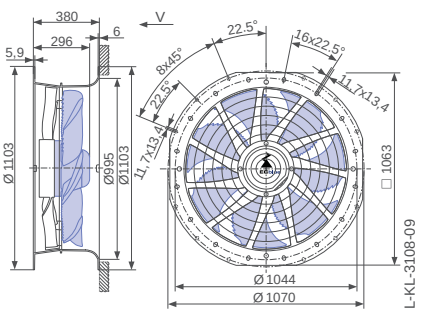

Performance data

Type	Characteristic curve	Speed n min⁻¹	Operating point	Current I A	Input power P_{sys} W	Suction side sound power level L_{WA5} dB(A)	Maximum ambient temperature t_R °C
ZN091-ZI_.GG.V5P1	I	950	①	6.40	2400		55
			②	5.60	2100	89	
			③	3.30	1250	81	
	II	920	④	6.40	2400		60
			⑤	5.00	1900	88	
			⑥	3.10	1150	81	
	III	740	⑦	4.80	1850		
			⑧	2.60	980	82	
			⑨	1.65	600	74	
	IV	550	⑩	2.00	740		
			⑪	1.20	420	73	
			⑫	0.82	260	66	
	V	370	⑬	0.76	240		
			⑭	0.54	140	62	
			⑮	0.42	95	56	

Current values determined at 230V

Fan ordering information

Airflow direction ◀ ▶ Airflow direction

Design	L (guard grille suction side) Ontop	L (without guard grille) Ontop	L (guard grille pressure side) Ontop	Q (without guard grille)	Q (guard grille pressure side)	H (guard grille pressure side) Flattop
	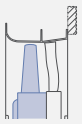		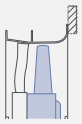	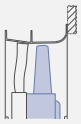	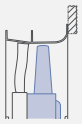	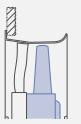
Type Article no.	**ZN091-ZIL.GG.V5P1 169899**	**ZN091-ZIL.GG.V5P1 164990**	**ZN091-ZIL.GG.V5P1 164992**	**ZN091-ZIQ.GG.V5P1 164996**	**ZN091-ZIQ.GG.V5P1 164998**	**ZN091-ZIH.GG.V5P1 165006**
Weight kg	43.00	39.30	41.20	42.30	44.20	41.20

ZAplus attachable on both sides.

Control technology

Control modules	Sensor control modules	Add-on modules	Operating terminal
			
Page 452	Page 454	Page 463	Page 472

Design Q - ZAplus with adapter plate, without guard grille

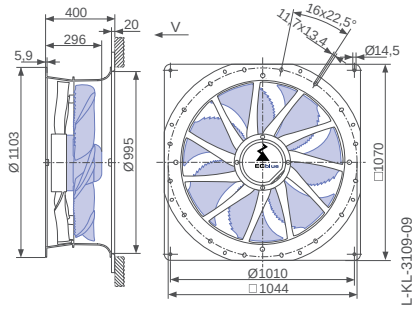

Design Q - ZAplus with adapter plate, guard grille pressure side

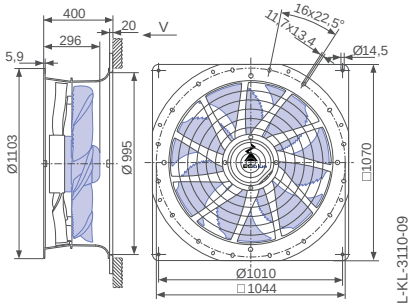

Design H - ZAplus Flattop, guard grille pressure side

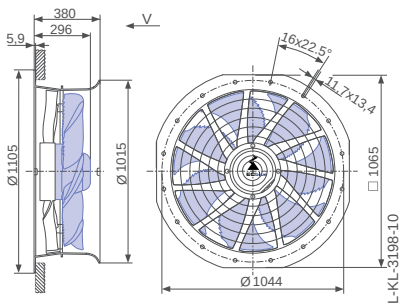

FE2owlet-ECblue with ZAplus

for three phase alternating current, 200-240 V

ZN091



Characteristic curve

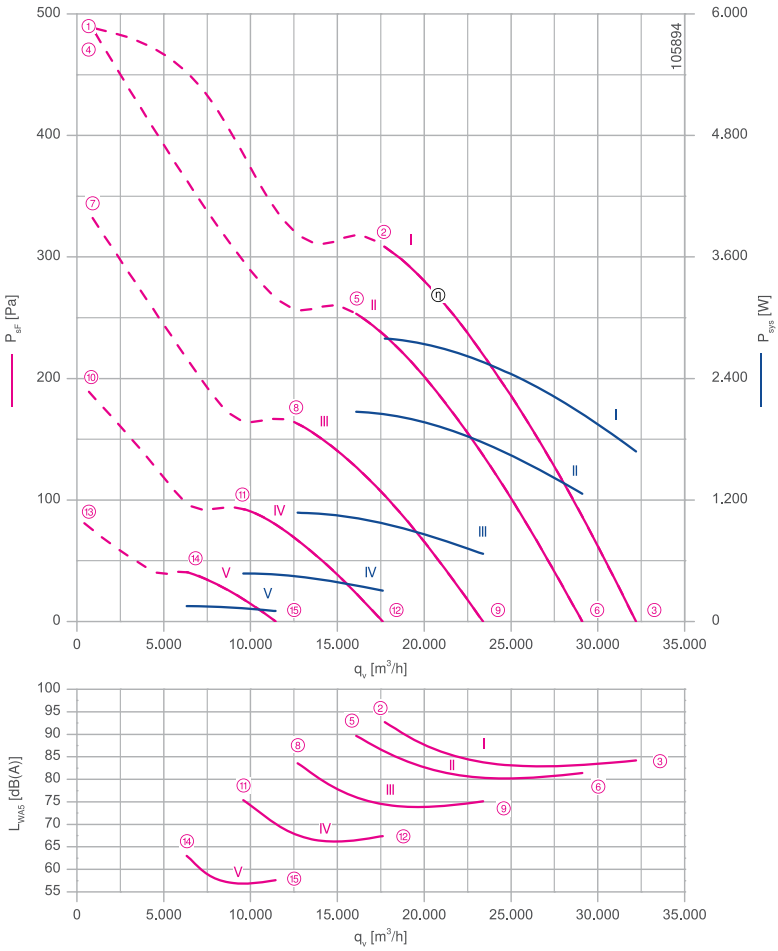

Measured in ZAplus without guard grille in installation type A according to ISO 5801

Description

Motor technology: EC
Rated voltage U_N: **3~ 200-240 V***
Rated frequency f_N: **50/60 Hz***
Input power P_{sys}: **2.80 kW***
Rated current I_N: **8.60- 7.20 A***
Rated speed n_N: **1060 min^{-1}***
Thermal class: **THCL155***
Min. permitted ambient temperature $t_{R(min)}$: -35 °C
Max. permitted ambient temperature $t_{R(max)}$: 50 °C
Electrical connection: integrated Controller
Number of blades: 5
Protection class: IP54
Motor protection: Integrated active temperature management
Blades: Aluminium, uncoated
Rotor: Steel, 2 coat paint, ultramarine blue
Conformity: ErP 2015, CE, UL
ErP-data
Efficiency η_{statA}: 61.9 %
Efficiency: N_{actual} = 65.5 / N_{target} = 40**
EC controller integrated
* Rated data
**ErP 2015

Connection diagram Page 530
1360-403

System components Page 430

Dimensions mm

Airflow direction

Design L - ZAplus Ontop, guard grille suction side

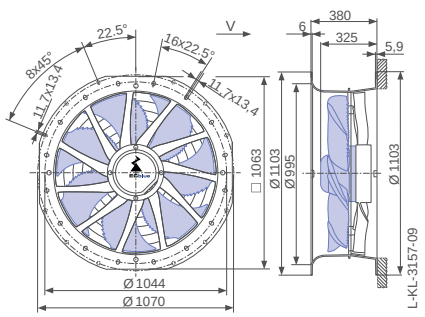

Airflow direction

Design L - ZAplus Ontop without guard grille

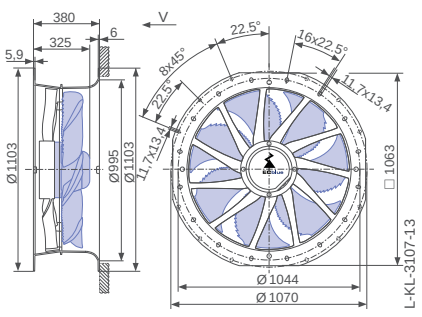

Design L - ZAplus Ontop, guard grille pressure side

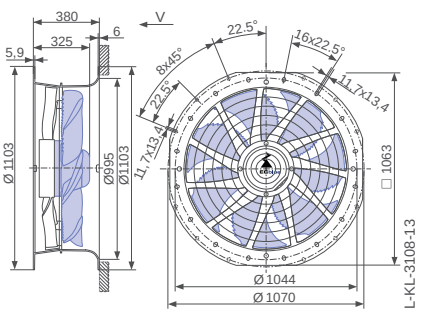

Performance data

Type	Characteristic curve	Speed n min⁻¹	Operating point	Current I A	Input power P_{sys} W	Suction side sound power level L_{WA5} dB(A)	Maximum ambient temperature t_R °C
ZN091-ZI_.GL.V5P1	I	1060	①	9.60	3600		50
			②	7.40	2800	93	
			③	4.40	1700	84	
	II	960	④	9.40	3600		60
			⑤	5.60	2100	90	
			⑥	3.40	1250	81	
	III	770	⑦	5.20	2000		
			⑧	2.90	1050	83	
			⑨	1.85	660	75	
	IV	580	⑩	2.30	860		
			⑪	1.35	480	75	
			⑫	0.90	300	67	
	V	380	⑬	0.80	250		
			⑭	0.56	150	63	
			⑮	0.44	100	58	

Current values determined at 230V

Fan ordering information

Airflow direction ◀ ▶ Airflow direction

Design	L (guard grille suction side) Ontop	L (without guard grille) Ontop	L (guard grille pressure side) Ontop	Q (without guard grille)	Q (guard grille pressure side)	H (guard grille pressure side) Flattop
	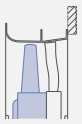		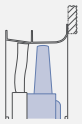	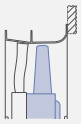	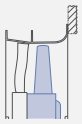	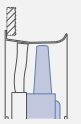
Type **Article no.**	**ZN091-ZIL.GL.V5P1** **169900**	**ZN091-ZIL.GL.V5P1** **165026**	**ZN091-ZIL.GL.V5P1** **165028**	**ZN091-ZIQ.GL.V5P1** **165032**	**ZN091-ZIQ.GL.V5P1** **165034**	**ZN091-ZIH.GL.V5P1** **165042**
Weight kg	47.20	43.50	45.40	46.70	48.60	45.40

ZAplus attachable on both sides.

Control technology

Control modules	Sensor control modules	Add-on modules	Operating terminal
			
Page 452	Page 454	Page 463	Page 472

Design Q - ZAplus with adapter plate, without guard grille

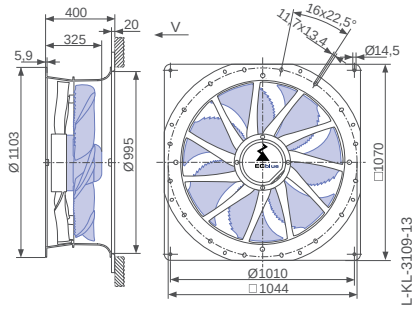

Design Q - ZAplus with adapter plate, guard grille pressure side

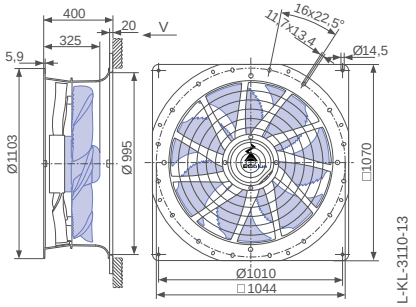

Design H - ZAplus Flattop, guard grille pressure side

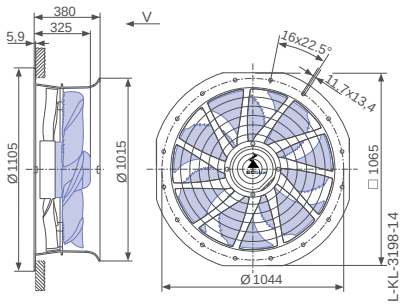

FE2owlet-ECblue with ZAplus

for three phase alternating current, 380-480 V

ZN091



Characteristic curve

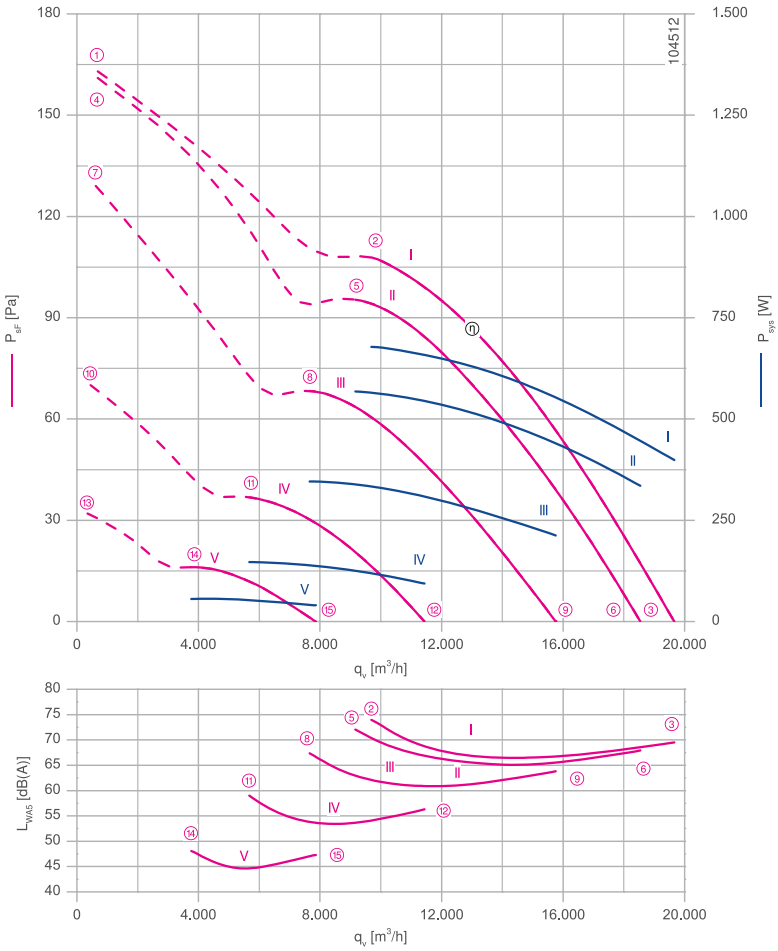

Measured in ZAplus without guard grille in installation type A according to ISO 5801

Description

Motor technology: EC
Rated voltage U_N: **3~ 380-480 V***
Rated frequency f_N: **50/60 Hz***
Input power P_{sys}: **0.68 kW***
Rated current I_N: **1.20- 0.96 A***
Rated speed n_N: **570 min^{-1}***
Thermal class: **THCL155***
Min. permitted ambient temperature $t_{R(min)}$: -35 °C
Max. permitted ambient temperature $t_{R(max)}$: 55 °C
Electrical connection: integrated Controller
Number of blades: 4
Protection class: IP54
Motor protection: Integrated active temperature management
Blades: High Performance Composite Material, uncoated
Rotor: Steel, 2 coat paint, ultramarine blue
Conformity: ErP 2015, CE, UL
ErP-data
Efficiency η_{statA}: 56.1 %
Efficiency: N_{actual} = 63.7 / N_{target} = 40**
EC controller integrated
* Rated data
**ErP 2015

Connection diagram Page 530
1360-403

System components Page 430

Dimensions mm

Airflow direction

Design L - ZAplus Ontop, guard grille suction side

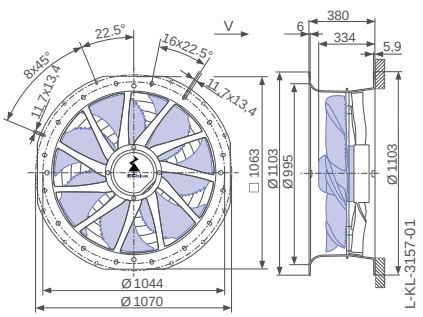

Airflow direction

Design L - ZAplus Ontop without guard grille

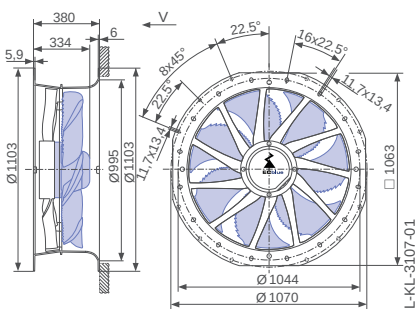

Design L - ZAplus Ontop, guard grille pressure side

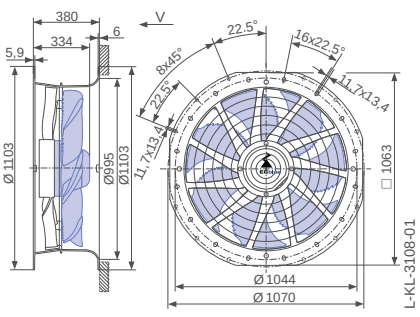

Performance data

Type	Characteristic curve	Speed n min⁻¹	Operating point	Current I A	Input power P_{sys} W	Suction side sound power level L_{WA5} dB(A)	Maximum ambient temperature t_R °C
ZN091-ZI_.DG.V4P3	I	570	①	1.40	840		55
			②	1.15	680	74	
			③	0.78	400	70	
	II	540	④	1.35	840		60
			⑤	1.00	560	72	
			⑥	0.70	330	68	
	III	460	⑦	1.05	600		
			⑧	0.72	350	67	
			⑨	0.50	210	64	
	IV	340	⑩	0.56	240		
			⑪	0.42	150	59	
			⑫	0.30	95	56	
	V	230	⑬	0.30	85		
			⑭	0.24	55	48	
			⑮	0.20	40	47	

Current values determined at 400V

Fan ordering information

Airflow direction ▶ ◀ Airflow direction

Design	L (guard grille suction side) Ontop	L (without guard grille) Ontop	L (guard grille pressure side) Ontop	Q (without guard grille)	Q (guard grille pressure side)	H (guard grille pressure side) Flattop
	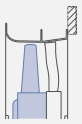		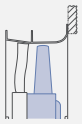	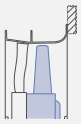	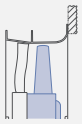	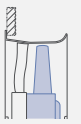
Type **Article no.**	**ZN091-ZIL.DG.V4P3** **167286**	**ZN091-ZIL.DG.V4P3** **164909**	**ZN091-ZIL.DG.V4P3** **164911**	**ZN091-ZIQ.DG.V4P3** **164915**	**ZN091-ZIQ.DG.V4P3** **164917**	**ZN091-ZIH.DG.V4P3** **164925**
Weight kg	31.40	27.60	29.50	31.50	33.40	29.50

ZAplus attachable on both sides.

Control technology

Control modules	Sensor control modules	Add-on modules	Operating terminal
			
Page 452	Page 454	Page 463	Page 472

Design Q - ZAplus with adapter plate, without guard grille

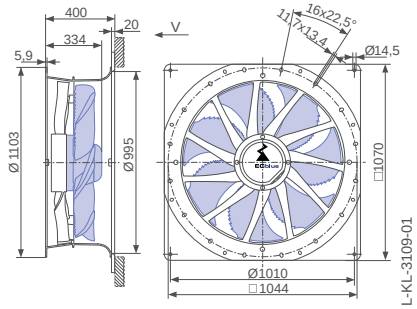

Design Q - ZAplus with adapter plate, guard grille pressure side

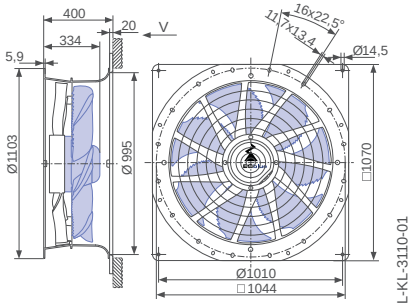

Design H - ZAplus Flattop, guard grille pressure side

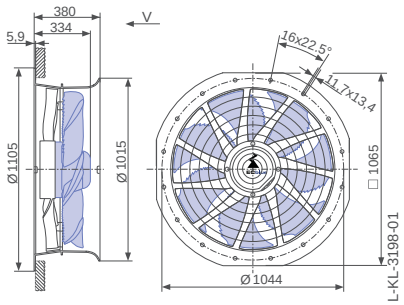

FE2owlet-ECblue with ZAplus

for three phase alternating current, 380-480 V

ZN091



Characteristic curve

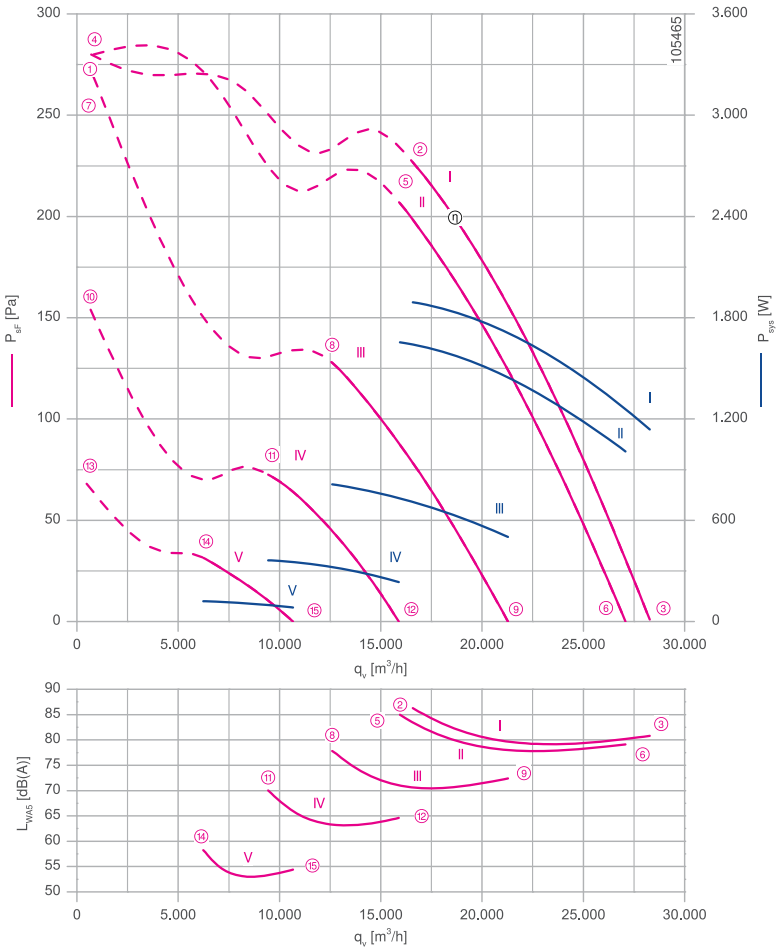

Measured in ZAplus without guard grille in installation type A according to ISO 5801

Description

Motor technology: EC
Rated voltage U_N: **3~ 380-480 V***
Rated frequency f_N: **50/60 Hz***
Input power P_{sys}: **1.90 kW***
Rated current I_N: **3.10- 2.50 A***
Rated speed n_N: **930 min^{-1}***
Thermal class: **THCL155***
Min. permitted ambient temperature $t_{R(min)}$: -35 °C
Max. permitted ambient temperature $t_{R(max)}$: 55 °C
Electrical connection: integrated Controller
Number of blades: 5
Protection class: IP54
Motor protection: Integrated active temperature management
Blades: Aluminium, uncoated
Rotor: Steel, 2 coat paint, ultramarine blue
Conformity: ErP 2015, CE, UL
ErP-data
Efficiency η_{statA}: 61.8 %
Efficiency: N_{actual} = 66.5 / N_{target} = 40**
EC controller integrated
* Rated data
**ErP 2015

Connection diagram Page 530
1360-403

System components Page 430

Dimensions mm

Airflow direction

Design L - ZAplus Ontop, guard grille suction side

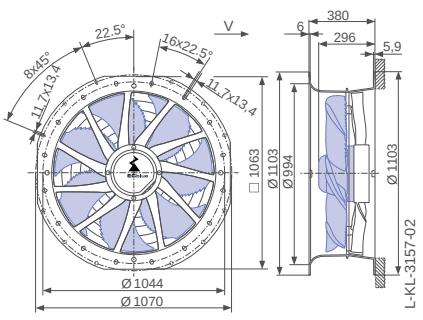

Airflow direction

Design L - ZAplus Ontop without guard grille

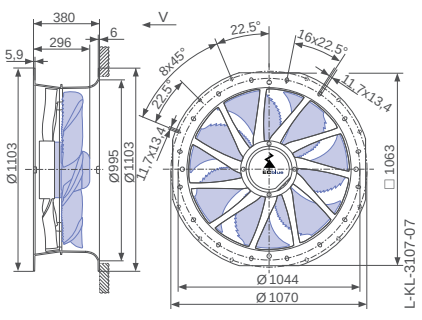

Design L - ZAplus Ontop, guard grille pressure side

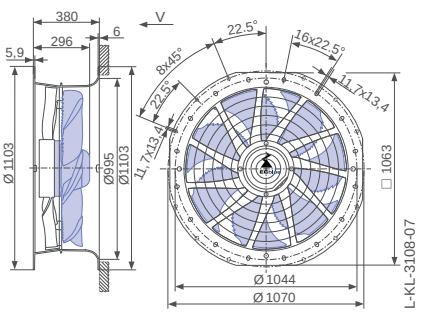

Performance data

Type	Characteristic curve	Speed n min⁻¹	Operating point	Current I A	Input power P_{sys} W	Suction side sound power level L_{WA5} dB(A)	Maximum ambient temperature t_R °C
ZN091-ZI_.GG.V5P1	I	930	①	2.50	1600		55
			②	2.90	1900	86	
			③	1.80	1150	81	
	II	890	④	2.50	1600		60
			⑤	2.60	1650	85	
			⑥	1.60	1000	79	
	III	700	⑦	2.30	1500		
			⑧	1.35	820	78	
			⑨	0.90	500	72	
	IV	530	⑩	1.10	640		
			⑪	0.76	360	70	
			⑫	0.56	230	65	
	V	350	⑬	0.52	200		
			⑭	0.38	120	58	
			⑮	0.30	85	54	

Current values determined at 400V

Fan ordering information

Airflow direction ◀ ▶ Airflow direction

Design	L (guard grille suction side) Ontop	L (without guard grille) Ontop	L (guard grille pressure side) Ontop	Q (without guard grille)	Q (guard grille pressure side)	H (guard grille pressure side) Flattop
	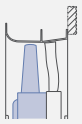		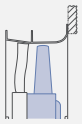	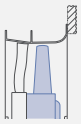	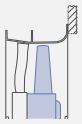	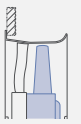
Type Article no.	**ZN091-ZIL.GG.V5P1 167287**	**ZN091-ZIL.GG.V5P1 164972**	**ZN091-ZIL.GG.V5P1 164974**	**ZN091-ZIQ.GG.V5P1 164978**	**ZN091-ZIQ.GG.V5P1 164980**	**ZN091-ZIH.GG.V5P1 164988**
Weight kg	43.00	39.30	41.20	42.30	44.20	41.20

ZAplus attachable on both sides.

Control technology

Control modules	Sensor control modules	Add-on modules	Operating terminal
			
Page 452	Page 454	Page 463	Page 472

Design Q - ZAplus with adapter plate, without guard grille

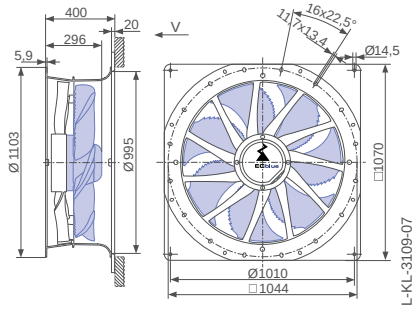

Design Q - ZAplus with adapter plate, guard grille pressure side

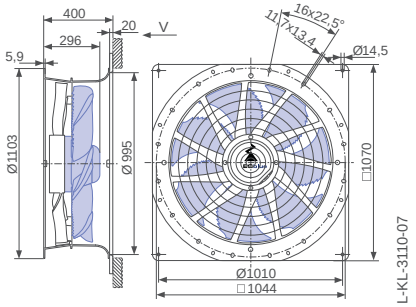

Design H - ZAplus Flattop, guard grille pressure side

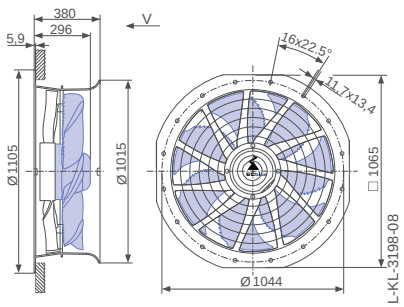

FE2owlet-ECblue with ZAplus

for three phase alternating current, 380-480 V

ZN091



Characteristic curve

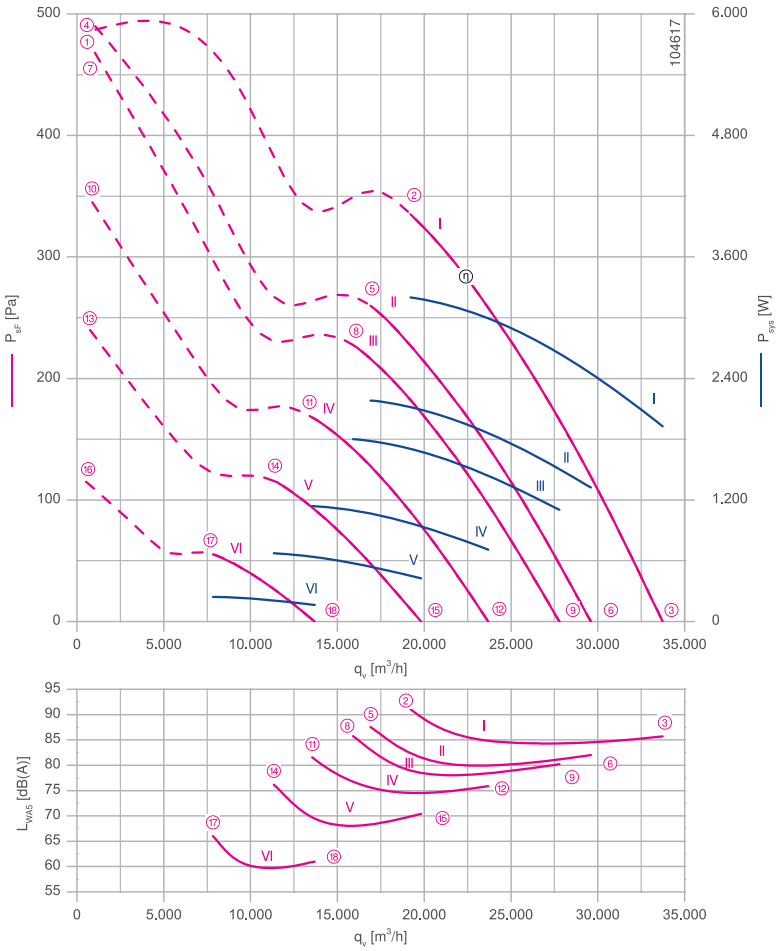

Measured in ZAplus without guard grille in installation type A according to ISO 5801

Description

Motor technology: EC
Rated voltage U_N: **3~ 380-480 V***
Rated frequency f_N: **50/60 Hz***
Input power P_{sys}: **3.20 kW***
Rated current I_N: **5.20- 4.20 A***
Rated speed n_N: **1100 min^{-1}***
Thermal class: **THCL155***
Min. permitted ambient temperature $t_{R(min)}$: -35 °C
Max. permitted ambient temperature $t_{R(max)}$: 45 °C
Electrical connection: integrated Controller
Number of blades: 5
Protection class: IP54
Motor protection: Integrated active temperature management
Blades: Aluminium, uncoated
Rotor: Steel, 2 coat paint, ultramarine blue
Conformity: ErP 2015, CE, UL
ErP-data
Efficiency η_{statA}: 62.0 %
Efficiency: N_{actual} = 65.3 / N_{target} = 40**
EC controller integrated
* Rated data
**ErP 2015

Connection diagram Page 530
1360-403

System components Page 430

Dimensions mm

Airflow direction

Design L - ZAplus Ontop, guard grille suction side

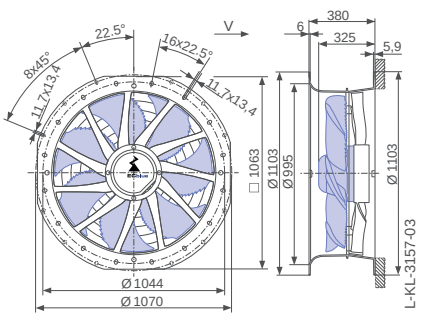

Airflow direction

Design L - ZAplus Ontop without guard grille

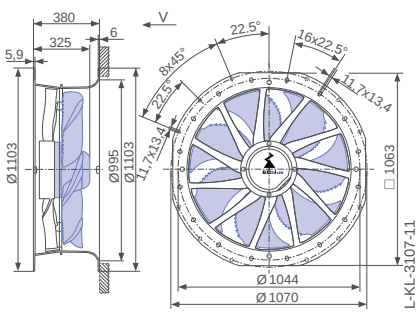

Design L - ZAplus Ontop, guard grille pressure side

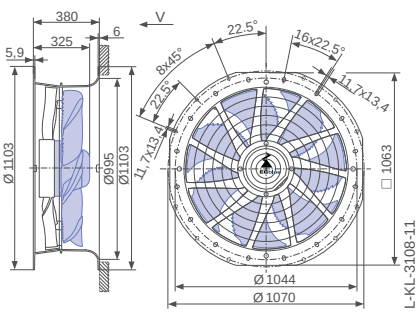

Performance data

Type	Characteristic curve	Speed n min⁻¹	Operating point	Current I A	Input power P_{sys} W	Suction side sound power level L_{WA5} dB(A)	Maximum ambient temperature t_R °C
ZN091-ZI_.GL.V5P1	I	1100	①	5.40	3600		45
			②	4.80	3200	92	
			③	3.00	1950	86	
	II	970	④	5.40	3600		60
			⑤	3.40	2200	88	
			⑥	2.10	1300	82	
	III	910	⑦	5.00	3300		
			⑧	2.80	1800	86	
			⑨	1.75	1100	80	
	IV	780	⑩	3.20	2100		
			⑪	1.80	1150	82	
			⑫	1.20	700	76	
	V	650	⑬	1.90	1200		
			⑭	1.15	680	77	
			⑮	0.82	420	70	
	VI	450	⑯	0.82	420		
			⑰	0.58	240	66	
			⑱	0.44	160	61	

Current values determined at 400V

Fan ordering information

Airflow direction ✕ Airflow direction

Design	L (guard grille suction side) Ontop	L (without guard grille) Ontop	L (guard grille pressure side) Ontop	Q (without guard grille)	Q (guard grille pressure side)	H (guard grille pressure side) Flattop
	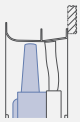		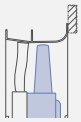		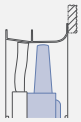	
Type **Article no.**	**ZN091-ZIL.GL.V5P1** **167288**	**ZN091-ZIL.GL.V5P1** **165008**	**ZN091-ZIL.GL.V5P1** **165010**	**ZN091-ZIQ.GL.V5P1** **165014**	**ZN091-ZIQ.GL.V5P1** **165016**	**ZN091-ZIH.GL.V5P1** **165024**
Weight kg	47.20	43.50	45.40	46.70	48.60	45.40

ZAplus attachable on both sides.

Control technology

Control modules	Sensor control modules	Add-on modules	Operating terminal
			
Page 452	Page 454	Page 463	Page 472

Design Q - ZAplus with adapter plate, without guard grille

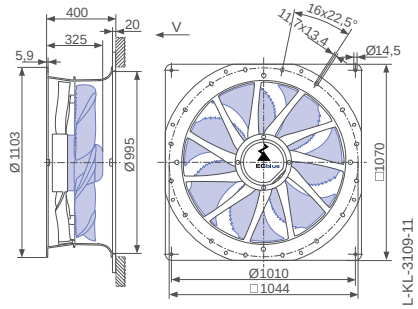

Design Q - ZAplus with adapter plate, guard grille pressure side

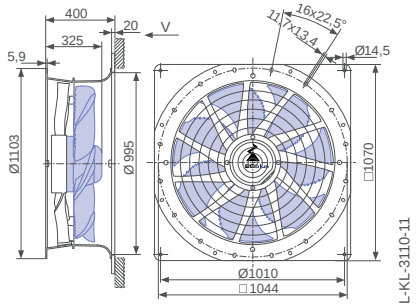

Design H - ZAplus Flattop, guard grille pressure side

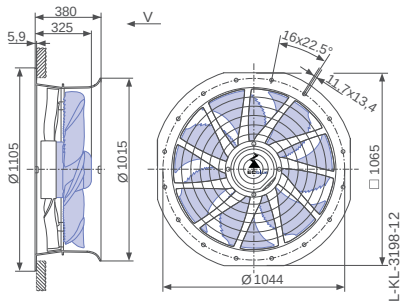





FE2owlet with ZAplus
AC-Technology

Product overview

Quick selection	Page 356
Size 450	Page 358
Size 500	Page 374
Size 630	Page 388
Size 710	Page 402
Size 800	Page 412
Size 910	Page 420

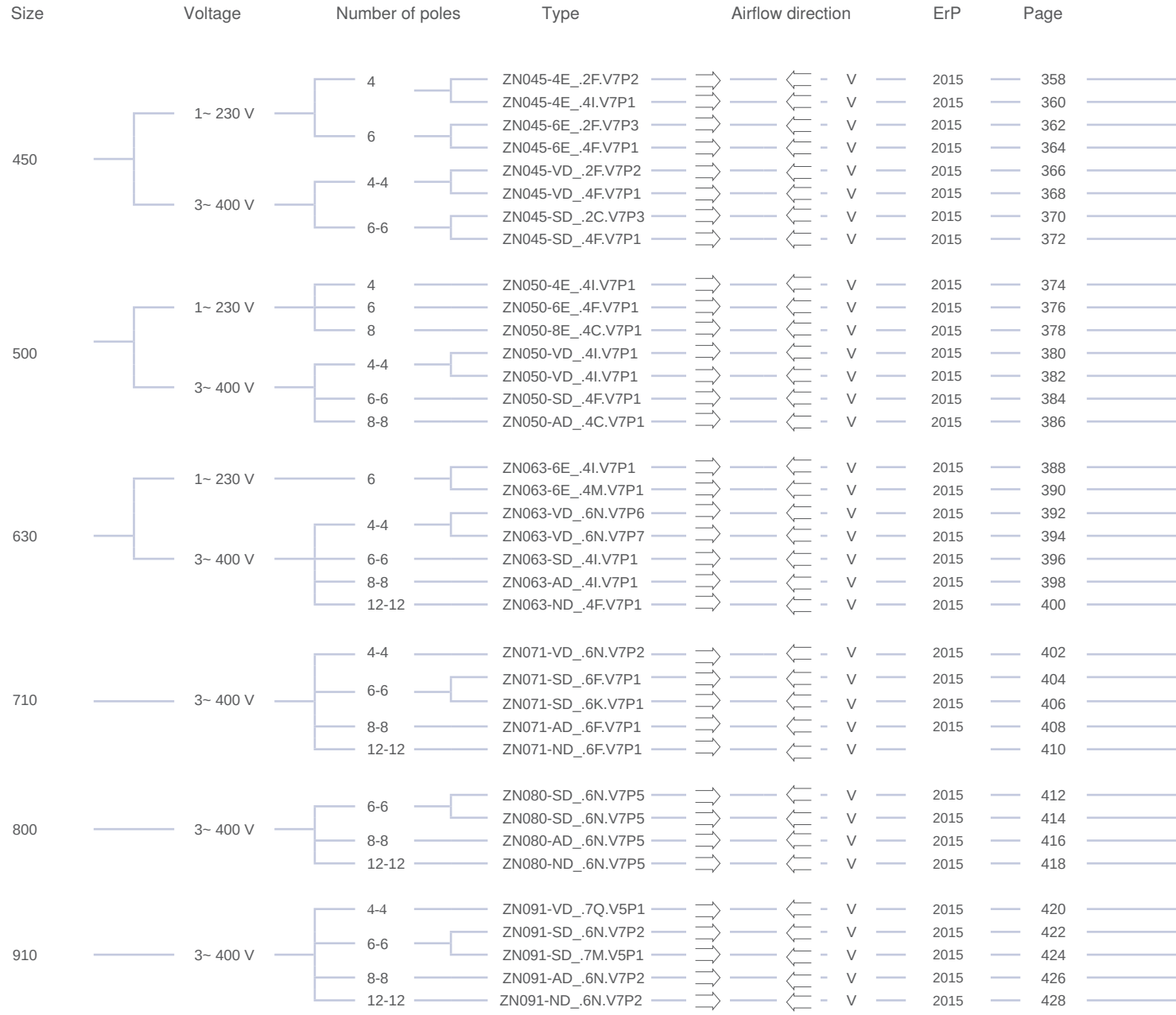
Size
Voltage
Number of poles
Type
Airflow direction
ErP
Page
450
1~ 230 V
3~ 400 V
4
6
4-4
6-6
ZN045-4E_.2F.V7P2 V 2015 358
ZN045-4E_.4I.V7P1 V 2015 360
ZN045-6E_.2F.V7P3 V 2015 362
ZN045-6E_.4F.V7P1 V 2015 364
ZN045-VD_.2F.V7P2 V 2015 366
ZN045-VD_.4F.V7P1 V 2015 368
ZN045-SD_.2C.V7P3 V 2015 370
ZN045-SD_.4F.V7P1 V 2015 372
500
1~ 230 V
3~ 400 V
4
6
8
4-4
6-6
8-8
ZN050-4E_.4I.V7P1 V 2015 374
ZN050-6E_.4F.V7P1 V 2015 376
ZN050-8E_.4C.V7P1 V 2015 378
ZN050-VD_.4I.V7P1 V 2015 380
ZN050-VD_.4I.V7P1 V 2015 382
ZN050-SD_.4F.V7P1 V 2015 384
ZN050-AD_.4C.V7P1 V 2015 386
630
1~ 230 V
3~ 400 V
6
4-4
6-6
8-8
12-12
ZN063-6E_.4I.V7P1 V 2015 388
ZN063-6E_.4M.V7P1 V 2015 390
ZN063-VD_.6N.V7P6 V 2015 392
ZN063-VD_.6N.V7P7 V 2015 394
ZN063-SD_.4I.V7P1 V 2015 396
ZN063-AD_.4I.V7P1 V 2015 398
ZN063-ND_.4F.V7P1 V 2015 400
710
3~ 400 V
4-4
6-6
8-8
12-12
ZN071-VD_.6N.V7P2 V 2015 402
ZN071-SD_.6F.V7P1 V 2015 404
ZN071-SD_.6K.V7P1 V 2015 406
ZN071-AD_.6F.V7P1 V 2015 408
ZN071-ND_.6F.V7P1 V 410
800
3~ 400 V
6-6
8-8
12-12
ZN080-SD_.6N.V7P5 V 2015 412
ZN080-SD_.6N.V7P5 V 2015 414
ZN080-AD_.6N.V7P5 V 2015 416
ZN080-ND_.6N.V7P5 V 2015 418
910
3~ 400 V
4-4
6-6
8-8
12-12
ZN091-VD_.7Q.V5P1 V 2015 420
ZN091-SD_.6N.V7P2 V 2015 422
ZN091-SD_.7M.V5P1 V 2015 424
ZN091-AD_.6N.V7P2 V 2015 426
ZN091-ND_.6N.V7P2 V 2015 428

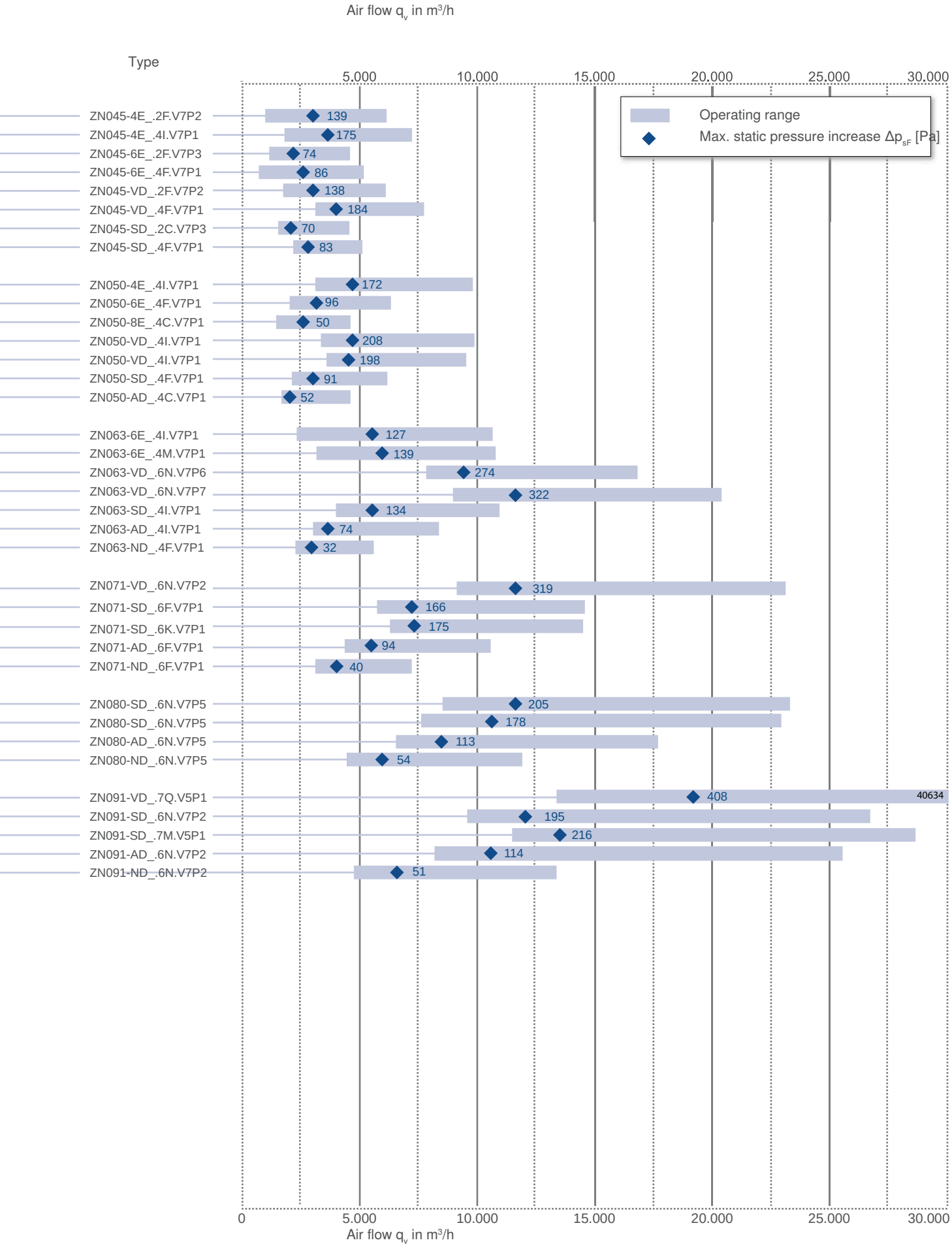
Air flow q_v in m³/h
Type
5.000
10.000
15.000
20.000
25.000
30.000
Operating range
Max. static pressure increase Δp_{sF} [Pa]
ZN045-4E_.2F.V7P2 139
ZN045-4E_.4I.V7P1 175
ZN045-6E_.2F.V7P3 74
ZN045-6E_.4F.V7P1 86
ZN045-VD_.2F.V7P2 138
ZN045-VD_.4F.V7P1 184
ZN045-SD_.2C.V7P3 70
ZN045-SD_.4F.V7P1 83
ZN050-4E_.4I.V7P1 172
ZN050-6E_.4F.V7P1 96
ZN050-8E_.4C.V7P1 50
ZN050-VD_.4I.V7P1 208
ZN050-VD_.4I.V7P1 198
ZN050-SD_.4F.V7P1 91
ZN050-AD_.4C.V7P1 52
ZN063-6E_.4I.V7P1 127
ZN063-6E_.4M.V7P1 139
ZN063-VD_.6N.V7P6 274
ZN063-VD_.6N.V7P7 322
ZN063-SD_.4I.V7P1 134
ZN063-AD_.4I.V7P1 74
ZN063-ND_.4F.V7P1 32
ZN071-VD_.6N.V7P2 319
ZN071-SD_.6F.V7P1 166
ZN071-SD_.6K.V7P1 175
ZN071-AD_.6F.V7P1 94
ZN071-ND_.6F.V7P1 40
ZN080-SD_.6N.V7P5 205
ZN080-SD_.6N.V7P5 178
ZN080-AD_.6N.V7P5 113
ZN080-ND_.6N.V7P5 54
ZN091-VD_.7Q.V5P1 408
40634
ZN091-SD_.6N.V7P2 195
ZN091-SD_.7M.V5P1 216
ZN091-AD_.6N.V7P2 114
ZN091-ND_.6N.V7P2 51
0
5.000
10.000
15.000
20.000
25.000
30.000
Air flow q_v in m³/h

FE2owlet with ZAplus

for single phase alternating current, 4 pole

ZN045-4E



Description

Motor technology: AC
Rated voltage U_N: **1~ 230 V±10 %***
Rated frequency f_N: **50 Hz***
Input power P_1: **380 W***
Rated current I_N: **1.70 A***
Rated speed n_N: **1250 min^{-1}***
Starting current I_A: 3.60 A
Current increase ΔI: 5 %
Service capacitor C_{400V}: 7.0 µF
Thermal class: **THCL155***
Min. permitted ambient temperature $t_{R(min)}$: -25 °C
Max. permitted ambient temperature $t_{R(max)}$: 65 °C
Electrical connection: Terminal box
Number of blades: 7
Protection class: IP44
Motor protection: thermal contact
Blades: High Performance Composite Material, uncoated,
Rotor: Aluminium, 1 coat paint, jet black
Conformity: ErP 2015, CE
ErP-data
Efficiency η_{statA}: 34.5 %
Efficiency: N_{actual} = 43.6 / N_{target} = 40**
* Rated data
**ErP 2015

Characteristic curve

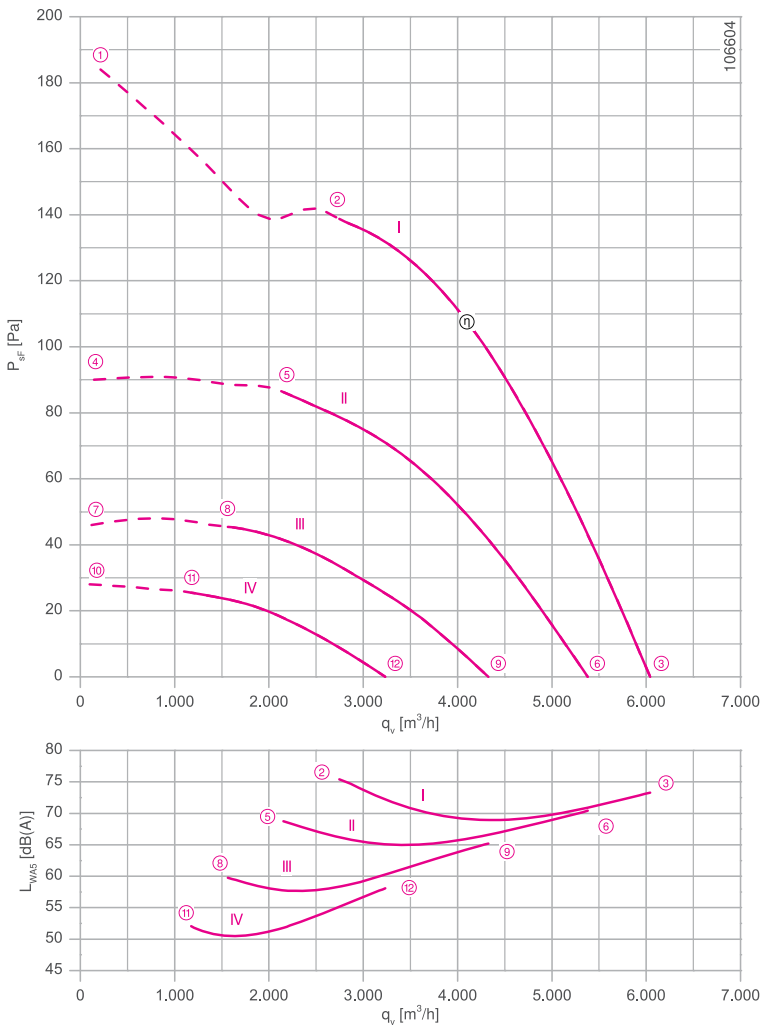

Measured in ZAplus without guard grille in installation type A according to ISO 5801

Connection diagram Page 531
1360-104XA

System components Page 430

Dimensions mm

Airflow direction

Design L - ZAplus Ontop, guard grille suction side

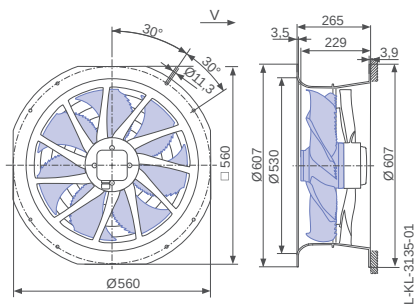

Airflow direction

Design L - ZAplus Ontop without guard grille

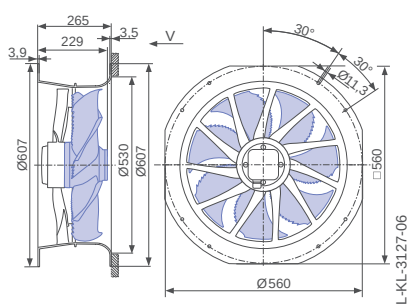

Design L - ZAplus Ontop, guard grille pressure side

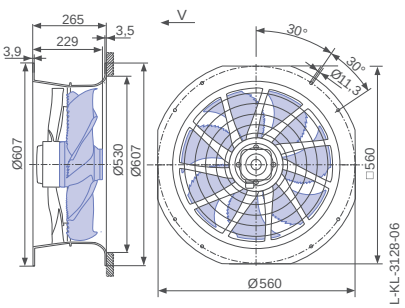

Performance data

Type	Characteristic curve	Voltage U V	Operating point	Current I A	Input power P_1 W	Speed n min^{-1}	Suction side sound power level L_{WA5} dB(A)
ZN045-4E_.2F._7P2	I	230	①	2.10	460	1150	
		230*	②	**1.70***	**380***	**1250***	76
		230	③	1.35	300	1340	73
	II	170	④	2.00	330	800	
		170	⑤	1.75	300	990	69
		170	⑥	1.40	230	1200	70
	III	135	⑦	1.70	220	580	
		135	⑧	1.65	220	720	60
		135	⑨	1.45	190	970	65
	IV	110	⑩	1.45	160	440	
		110	⑪	1.40	150	540	52
		110	⑫	1.35	140	730	58

*rated data

Fan ordering information

Airflow direction		Airflow direction				
Design	L (guard grille suction side) Ontop	L (without guard grille) Ontop	L (guard grille pressure side) Ontop	Q (without guard grille)	Q (guard grille pressure side)	H (guard grille pressure side) Flattop
	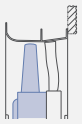		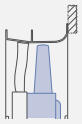		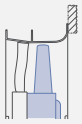	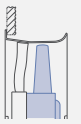
Type **Article no.**	**ZN045-4EL.2F.V7P2** **166922**	**ZN045-4EL.2F.V7P2** **166885**	**ZN045-4EL.2F.V7P2** **166886**	**ZN045-4EQ.2F.V7P2** **166890**	**ZN045-4EQ.2F.V7P2** **166891**	**ZN045-4EH.2F.V7P2** **166895**
Weight kg	9.20	8.20	8.80	8.90	9.60	8.60

ZAplus attachable on both sides.

Control technology

Frequency inverters Fcontrol 1~	Motor protection units 1~	Electronic voltage controllers 1~
		
Page 474	Page 518	Page 492

Design Q - ZAplus with adapter plate, without guard grille

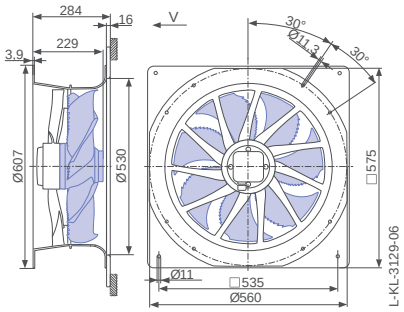

Design Q - ZAplus with adapter plate, guard grille pressure side

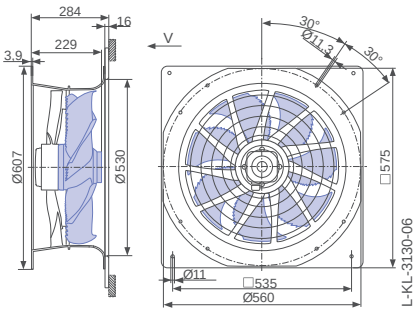

Design H - ZAplus Flattop, guard grille pressure side

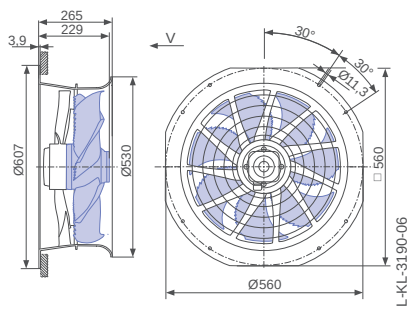

FE2owlet with ZAplus

for single phase alternating current, 4 pole

ZN045-4E



Description

Motor technology: AC
Rated voltage U_N: **1~ 230 V±10 %***
Rated frequency f_N: **50 Hz*** (60Hz data available)
Input power P_1: **0.54 kW***
Rated current I_N: **2.50 A***
Rated speed n_N: **1310 min^{-1}***
Starting current I_A: 6.50 A
Current increase ΔI: 0 %
Service capacitor C_{400V}: 14.0 µF
Thermal class: **THCL155***
Min. permitted ambient temperature $t_{R(min)}$: -25 °C
Max. permitted ambient temperature $t_{R(max)}$: 70 °C
Electrical connection: Terminal box
Number of blades: 7
Protection class: IP54
Motor protection: thermal contact
Blades: Aluminium, uncoated
Rotor: Aluminium, uncoated
Conformity: ErP 2015, CE
ErP-data
Efficiency η_{statA}: 38.8 %
Efficiency: N_{actual} = 46.9 / N_{target} = 40**
* Rated data
**ErP 2015

Characteristic curve

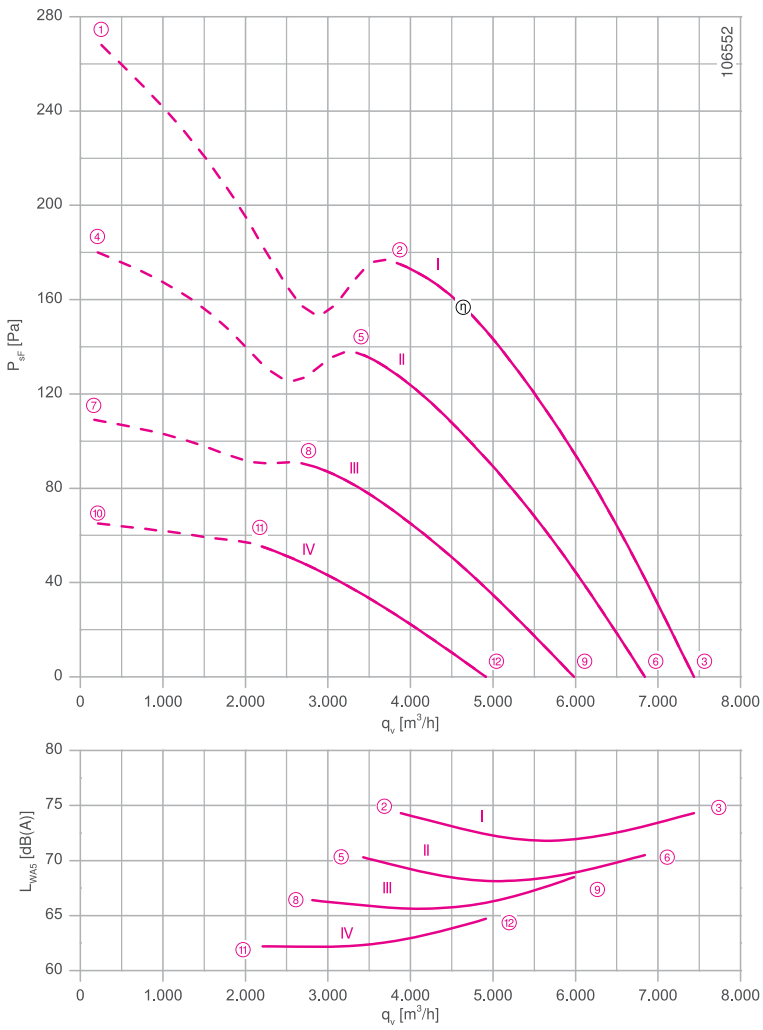

Measured in ZAplus without guard grille in installation type A according to ISO 5801

Connection diagram Page 531
1360-104XA

System components Page 430

Dimensions mm

Airflow direction

Design L - ZAplus Ontop, guard grille suction side

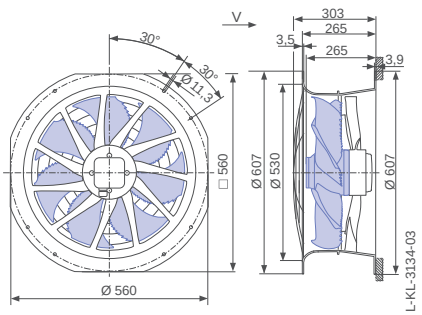

Airflow direction

Design L - ZAplus Ontop without guard grille

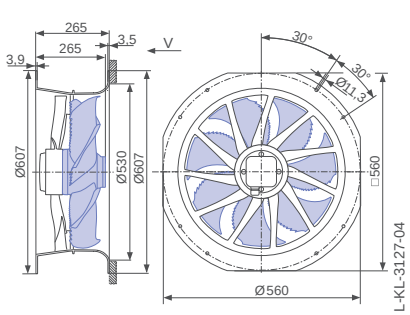

Design L - ZAplus Ontop, guard grille pressure side

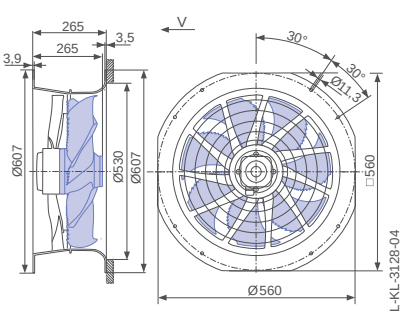

Performance data

Type	Characteristic curve	Voltage U V	Operating point	Current I A	Input power P_1 W	Speed n min^{-1}	Suction side sound power level L_{WA5} dB(A)
ZN045-4E_.4I._7P1	I	230	①	2.90	640	1250	
		230*	②	**2.50***	**540***	**1310***	74
		230	③	2.10	460	1360	74
	II	170	④	2.90	480	1020	
		170	⑤	2.50	420	1150	70
		170	⑥	2.10	350	1260	71
	III	135	⑦	2.70	340	800	
		135	⑧	2.50	320	940	67
		135	⑨	2.20	280	1100	69
	IV	110	⑩	2.40	240	620	
		110	⑪	2.30	230	740	62
		110	⑫	2.10	220	900	65

*rated data

Fan ordering information

Airflow direction	Airflow direction					
Design	L (guard grille suction side) Ontop	L (without guard grille) Ontop	L (guard grille pressure side) Ontop	Q (without guard grille)	Q (guard grille pressure side)	H (guard grille pressure side) Flattop
	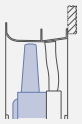		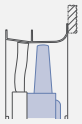		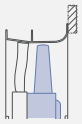	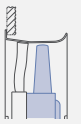
Type **Article no.**	**ZN045-4EL.4I.V7P1** **169868**	**ZN045-4EL.4I.V7P1** **166841**	**ZN045-4EL.4I.V7P1** **166842**	**ZN045-4EQ.4I.V7P1** **166846**	**ZN045-4EQ.4I.V7P1** **166847**	**ZN045-4EH.4I.V7P1** **166851**
Weight kg	13.60	14.20	14.80	14.90	15.60	14.80

ZAplus attachable on both sides.

Control technology

Frequency inverters Fcontrol 1~	Motor protection units 1~	Electronic voltage controllers 1~
		
Page 474	Page 518	Page 492

Design Q - ZAplus with adapter plate, without guard grille

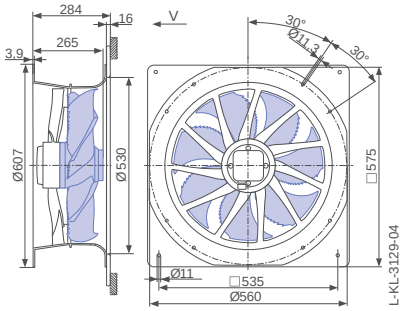

Design Q - ZAplus with adapter plate, guard grille pressure side

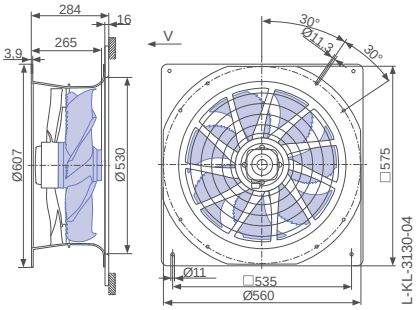

Design H - ZAplus Flattop, guard grille pressure side

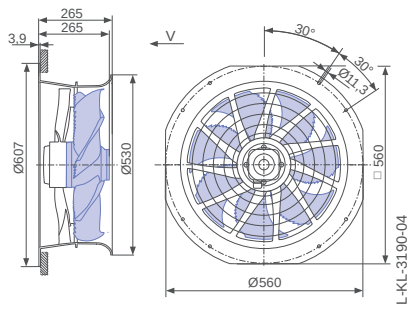

FE2owlet with ZAplus

for single phase alternating current, 6 pole

ZN045-6E



Characteristic curve

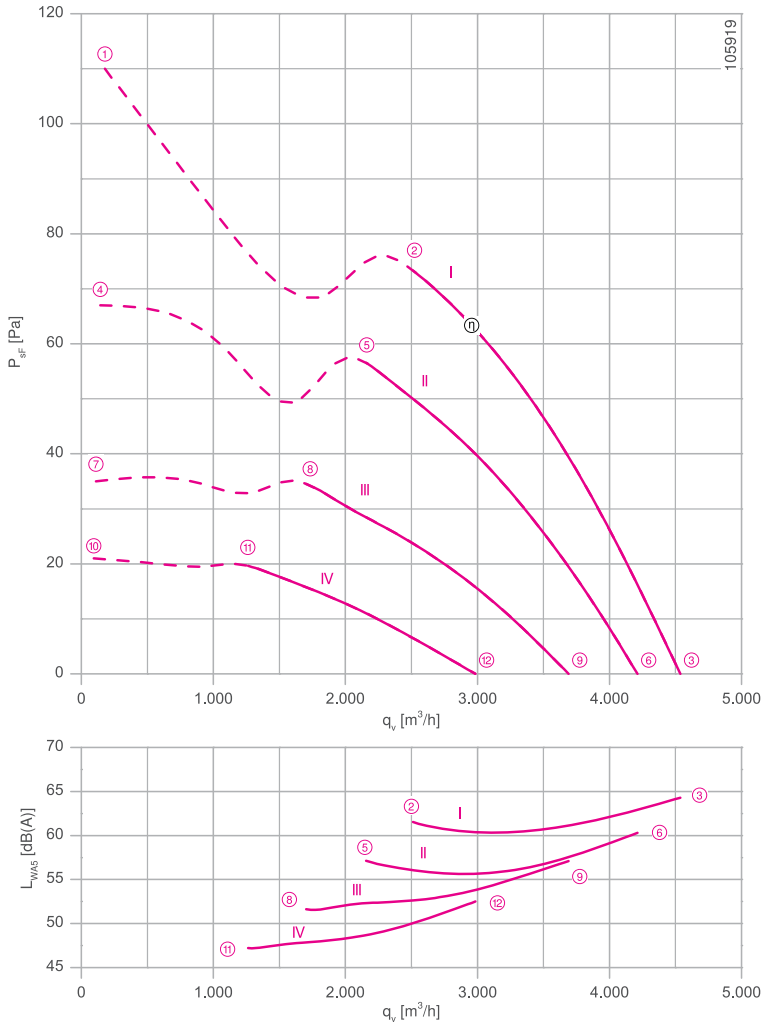

Measured in ZAplus without guard grille in installation type A according to ISO 5801

Description

Motor technology: AC
Rated voltage U_N: **1~ 230 V±10 %***
Rated frequency f_N: **50 Hz*** (60Hz data available)
Input power P_1: **180 W***
Rated current I_N: **0.80 A***
Rated speed n_N: **870 min^{-1}***
Starting current I_A: 1.50 A
Current increase ΔI: 0 %
Service capacitor C_{400V}: 6.0 µF
Thermal class: **THCL155***
Min. permitted ambient temperature $t_{R(min)}$: -25 °C
Max. permitted ambient temperature $t_{R(max)}$: 70 °C
Electrical connection: Terminal box
Number of blades: 7
Protection class: IP44
Motor protection: thermal contact
Blades: High Performance Composite Material, uncoated,
Rotor: Aluminium, 1 coat paint, jet black
Conformity: ErP 2015, CE
ErP-data
Efficiency η_{statA}: 30.0 %
Efficiency: N_{actual} = 41.1 / N_{target} = 40**
* Rated data
**ErP 2015

Connection diagram	Page 531 1360-104XA
System components	Page 430

Dimensions mm

Airflow direction

Design L - ZAplus Ontop, guard grille suction side

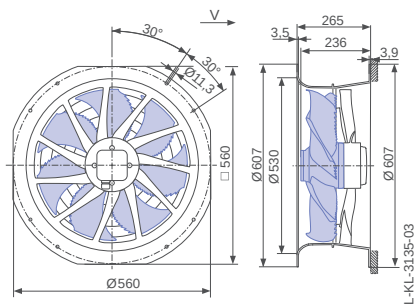

Airflow direction

Design L - ZAplus Ontop without guard grille

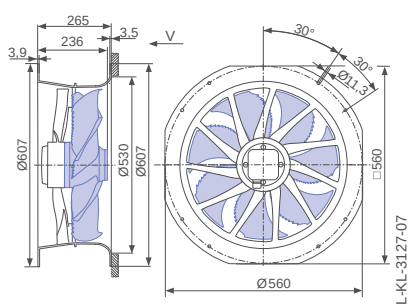

Design L - ZAplus Ontop, guard grille pressure side

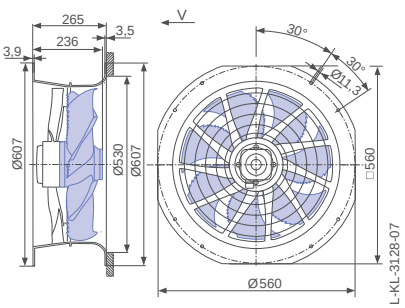

Performance data

Type	Characteristic curve	Voltage U V	Operating point	Current I A	Input power P_1 W	Speed n min^{-1}	Suction side sound power level L_{WA5} dB(A)
ZN045-6E_.2F._7P3	I	230	①	0.94	210	820	
		230*	②	**0.80***	**180***	**870***	62
		230	③	0.70	160	920	64
	II	170	④	0.90	150	630	
		170	⑤	0.76	130	760	57
		170	⑥	0.62	110	850	60
	III	135	⑦	0.78	100	460	
		135	⑧	0.74	100	590	53
		135	⑨	0.62	85	750	57
	IV	110	⑩	0.68	70	350	
		110	⑪	0.66	70	440	48
		110	⑫	0.60	65	600	53

*rated data

Fan ordering information

Airflow direction	Airflow direction					
Design	L (guard grille suction side) Ontop	L (without guard grille) Ontop	L (guard grille pressure side) Ontop	Q (without guard grille)	Q (guard grille pressure side)	H (guard grille pressure side) Flattop
	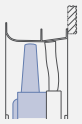		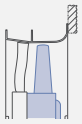		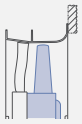	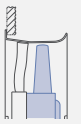
Type **Article no.**	**ZN045-6EL.2F.V7P3** **166924**	**ZN045-6EL.2F.V7P3** **166907**	**ZN045-6EL.2F.V7P3** **166908**	**ZN045-6EQ.2F.V7P3** **166912**	**ZN045-6EQ.2F.V7P3** **166913**	**ZN045-6EH.2F.V7P3** **166917**
Weight kg	9.30	8.20	8.90	9.00	9.60	8.90
ZAplus attachable on both sides.						

Control technology

Frequency inverters Fcontrol 1~	Motor protection units 1~	Electronic voltage controllers 1~
		
Page 474	Page 518	Page 492

Design Q - ZAplus with adapter plate, without guard grille

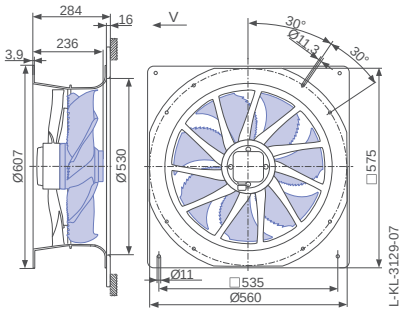

Design Q - ZAplus with adapter plate, guard grille pressure side

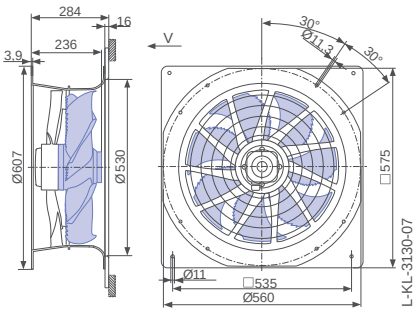

Design H - ZAplus Flattop, guard grille pressure side

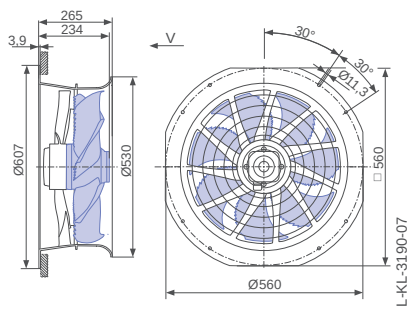

FE2owlet with ZAplus

for single phase alternating current, 6 pole

ZN045-6E



Description

Motor technology: AC
Rated voltage U_N: **1~ 230 V±10 %***
Rated frequency f_N: **50 Hz*** (60Hz data available)
Input power P_1: **190 W***
Rated current I_N: **0.92 A***
Rated speed n_N: **910 min^{-1}***
Starting current I_A: 2.00 A
Current increase ΔI: 25 %
Service capacitor C_{400V}: 6.0 µF
Thermal class: **THCL155***
Min. permitted ambient temperature $t_{R(min)}$: -25 °C
Max. permitted ambient temperature $t_{R(max)}$: 70 °C
Electrical connection: Terminal box
Number of blades: 7
Protection class: IP54
Motor protection: thermal contact
Blades: Aluminium, uncoated
Rotor: Aluminium, uncoated
Conformity: ErP 2015, CE
ErP-data
Efficiency η_{statA}: 37.0 %
Efficiency: N_{actual} = 47.9 / N_{target} = 40**
* Rated data
**ErP 2015

Characteristic curve

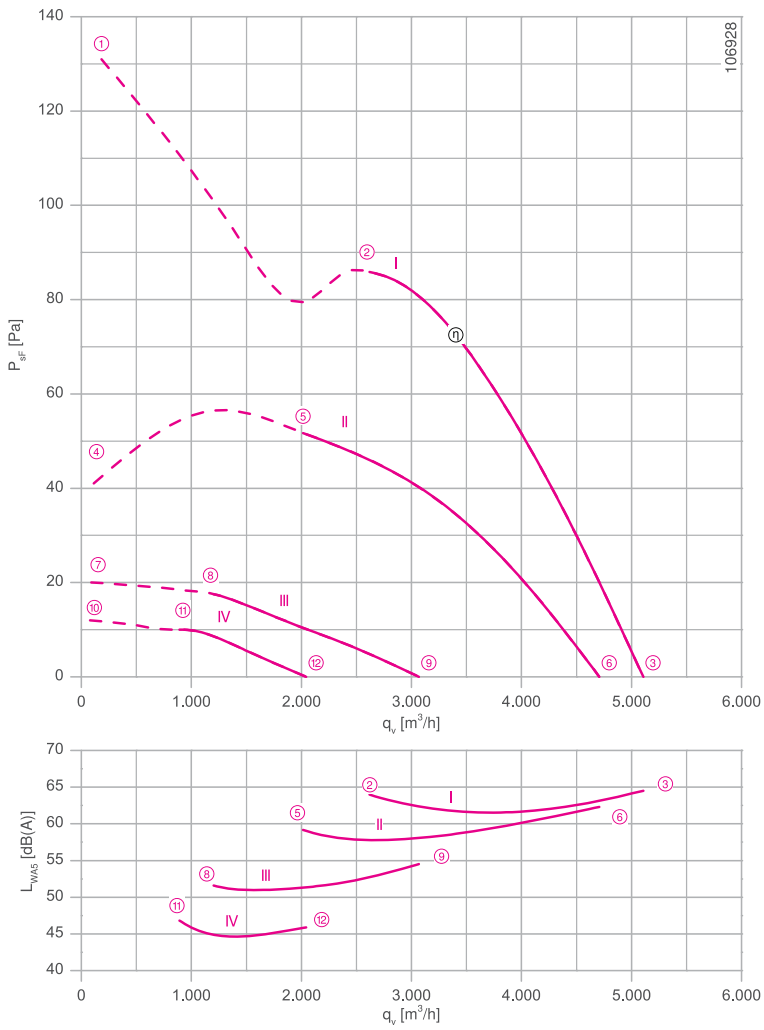

Measured in ZAplus without guard grille in installation type A according to ISO 5801

Connection diagram Page 531
1360-104XA

System components Page 430

Dimensions mm

Airflow direction

Design L - ZAplus Ontop, guard grille suction side

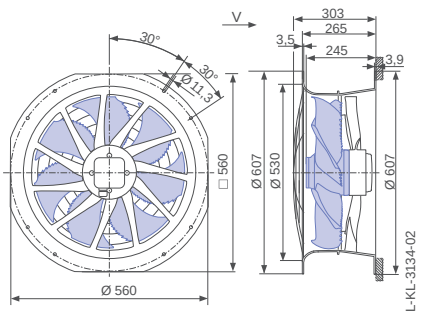

Airflow direction

Design L - ZAplus Ontop without guard grille

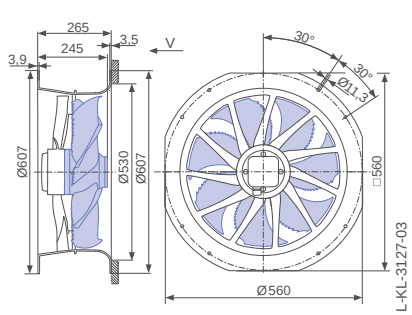

Design L - ZAplus Ontop, guard grille pressure side

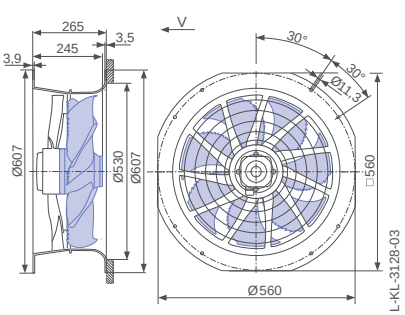

Performance data

Type	Characteristic curve	Voltage U V	Operating point	Current I A	Input power P_1 W	Speed n min^{-1}	Suction side sound power level L_{WA5} dB(A)
ZN045-6E_.4F._7P1	I	230	①	1.15	240	860	
		230*	②	**0.90***	**190***	**910***	64
		230	③	0.76	160	940	65
	II	170	④	1.30	180	490	
		170	⑤	1.10	170	710	59
		170	⑥	0.80	130	870	62
	III	135	⑦	1.00	110	330	
		135	⑧	1.00	110	400	52
		135	⑨	0.96	110	570	55
	IV	110	⑩	0.84	75	260	
		110	⑪	0.84	75	310	47
		110	⑫	0.82	70	380	46

*rated data

Fan ordering information

Airflow direction	Airflow direction					
Design	L (guard grille suction side) Ontop	L (without guard grille) Ontop	L (guard grille pressure side) Ontop	Q (without guard grille)	Q (guard grille pressure side)	H (guard grille pressure side) Flattop
	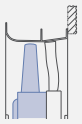		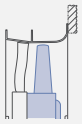		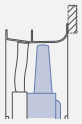	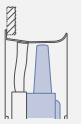
Type **Article no.**	**ZN045-6EL.4F.V7P1** **166921**	**ZN045-6EL.4F.V7P1** **166863**	**ZN045-6EL.4F.V7P1** **166864**	**ZN045-6EQ.4F.V7P1** **166868**	**ZN045-6EQ.4F.V7P1** **166869**	**ZN045-6EH.4F.V7P1** **166873**
Weight kg	13.60	12.60	13.20	13.30	14.00	13.20

ZAplus attachable on both sides.

Control technology

Frequency inverters Fcontrol 1~	Motor protection units 1~	Electronic voltage controllers 1~
		
Page 474	Page 518	Page 492

Design Q - ZAplus with adapter plate, without guard grille

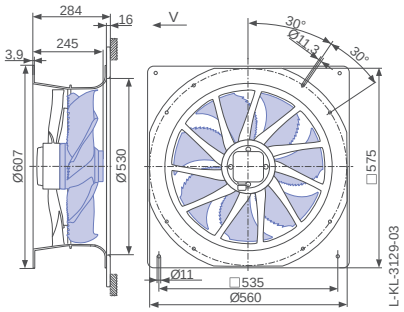

Design Q - ZAplus with adapter plate, guard grille pressure side

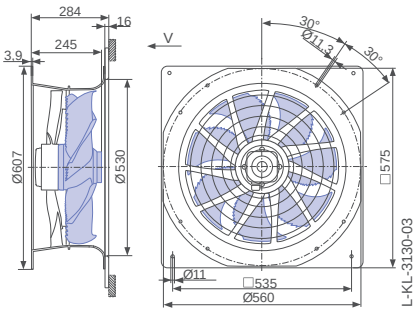

Design H - ZAplus Flattop, guard grille pressure side

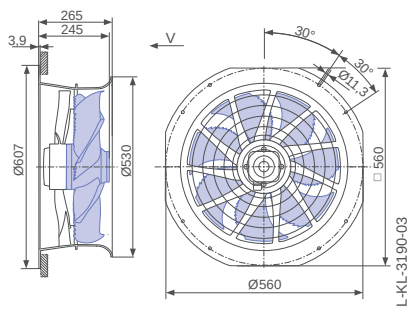

FE2owlet with ZAplus

for three phase alternating current, 4-4 pole

ZN045-VD



Characteristic curve

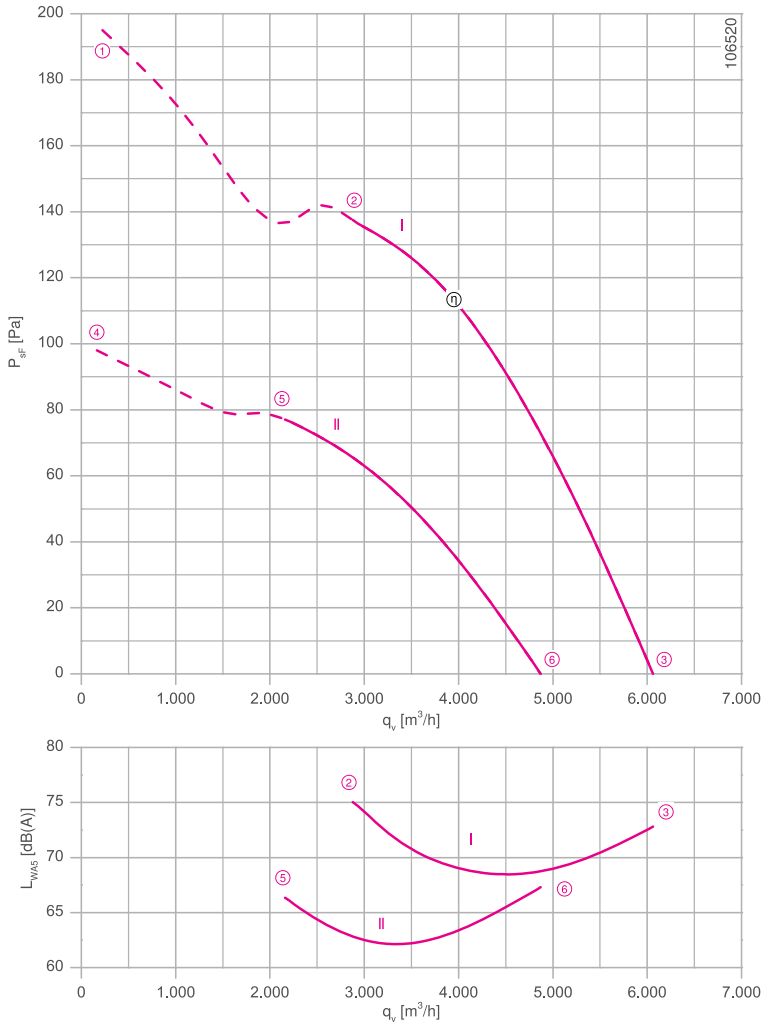

Measured in ZAplus without guard grille in installation type A according to ISO 5801

Description

Motor technology: AC
Rated voltage U_N: **3~ 400 V (Δ/Y) ±10 %***
Rated frequency f_N: **50 Hz*** (60Hz data available)
Input power P_1: **0.35/0.22 kW***
Rated current I_N: **0.64/0.35 A***
Rated speed n_N: **1260/ 950 min^{-1}***
Starting current I_A: 1.90 / 0.65 A
Current increase ΔI: 0 %
Thermal class: **THCL155***
Min. permitted ambient temperature $t_{R(min)}$: -40 °C
Max. permitted ambient temperature $t_{R(max)}$: 70 °C
Electrical connection: Terminal box
Number of blades: 7
Protection class: IP44
Motor protection: thermal contact
Blades: High Performance Composite Material, uncoated,
Rotor: Aluminium, 1 coat paint, jet black
Conformity: ErP 2015, CE
ErP-data
Efficiency η_{statA}: 38.5 %
Efficiency: N_{actual} = 47.9 / N_{target} = 40**
* Rated data
**ErP 2015

Connection diagram Page 531
1360-108XA

System components Page 430

Dimensions mm

Airflow direction

Design L - ZAplus Ontop, guard grille suction side

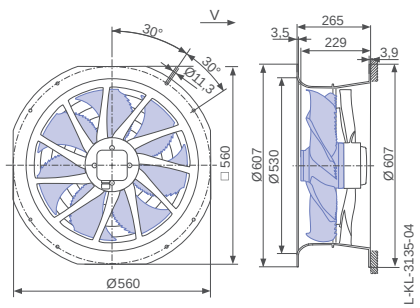

Airflow direction

Design L - ZAplus Ontop without guard grille

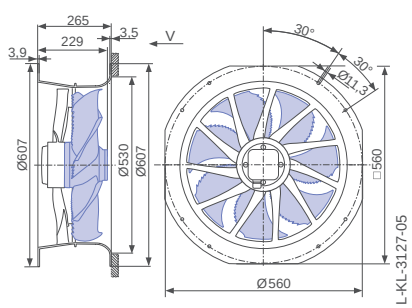

Design L - ZAplus Ontop, guard grille pressure side

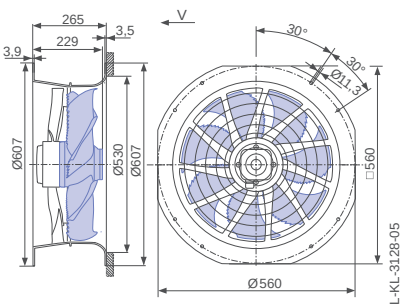

Performance data

Type	Connection	Characteristic curve	Voltage U V	Operating point	Current I A	Input power P_1 W	Speed n min^{-1}	Suction side sound power level L_{WA5} dB(A)
ZN045-VD_.2F._7P2	Δ	I	400	①	0.72	420	1190	
			400*	②	**0.64***	**350***	**1260***	75
			400	③	0.54	260	1340	73
	Y	II	400	④	0.38	240	850	
			400*	⑤	**0.34***	**220***	**950***	67
			400	⑥	0.28	180	1090	67

*rated data

Fan ordering information

Airflow direction → Airflow direction

Design	L (guard grille suction side) Ontop	L (without guard grille) Ontop	L (guard grille pressure side) Ontop	Q (without guard grille)	Q (guard grille pressure side)	H (guard grille pressure side) Flattop
	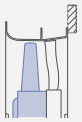		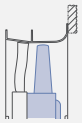	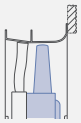		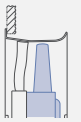
Type **Article no.**	**ZN045-VDL.2F.V7P2** **169870**	**ZN045-VDL.2F.V7P2** **166874**	**ZN045-VDL.2F.V7P2** **166875**	**ZN045-VDQ.2F.V7P2** **166879**	**ZN045-VDQ.2F.V7P2** **166880**	**ZN045-VDH.2F.V7P2** **166884**
Weight kg	9.20	8.20	8.80	8.90	9.60	8.60

ZAplus attachable on both sides.

Control technology

Frequency inverters Fcontrol 3~	Motor protection units 3~	Electronic voltage controllers 3~
		
Page 480	Page 518	Page 506

Design Q - ZAplus with adapter plate, without guard grille

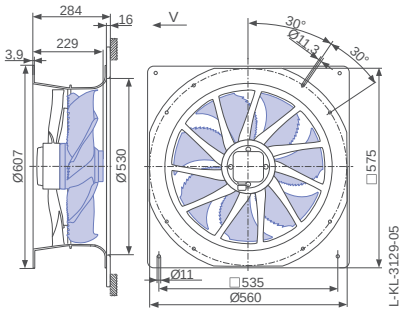

Design Q - ZAplus with adapter plate, guard grille pressure side

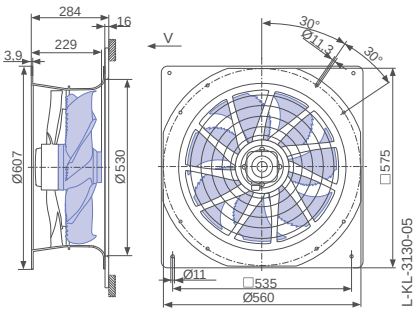

Design H - ZAplus Flattop, guard grille pressure side

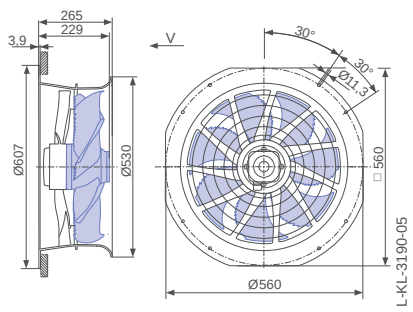

FE2owlet with ZAplus

for three phase alternating current, 4-4 pole

ZN045-VD



Description

Motor technology: AC
Rated voltage U_N: **3~ 400 V (Δ/Y) ±10 %***
Rated frequency f_N: **50 Hz*** (60Hz data available)
Input power P_1: **0.56/0.38 kW***
Rated current I_N: **1.10/0.68 A***
Rated speed n_N: **1350/1020 min^{-1}***
Starting current I_A: 4.00 / 1.20 A
Current increase ΔI: 10 %
Thermal class: **THCL155***
Min. permitted ambient temperature $t_{R(min)}$: -40 °C
Max. permitted ambient temperature $t_{R(max)}$: 70 °C
Electrical connection: Terminal box
Number of blades: 7
Protection class: IP54
Motor protection: thermal contact
Blades: Aluminium, uncoated
Rotor: Aluminium, uncoated
Conformity: ErP 2015, CE
ErP-data
Efficiency η_{statA}: 41.6 %
Efficiency: N_{actual} = 49.6 / N_{target} = 40**
* Rated data
**ErP 2015

Characteristic curve

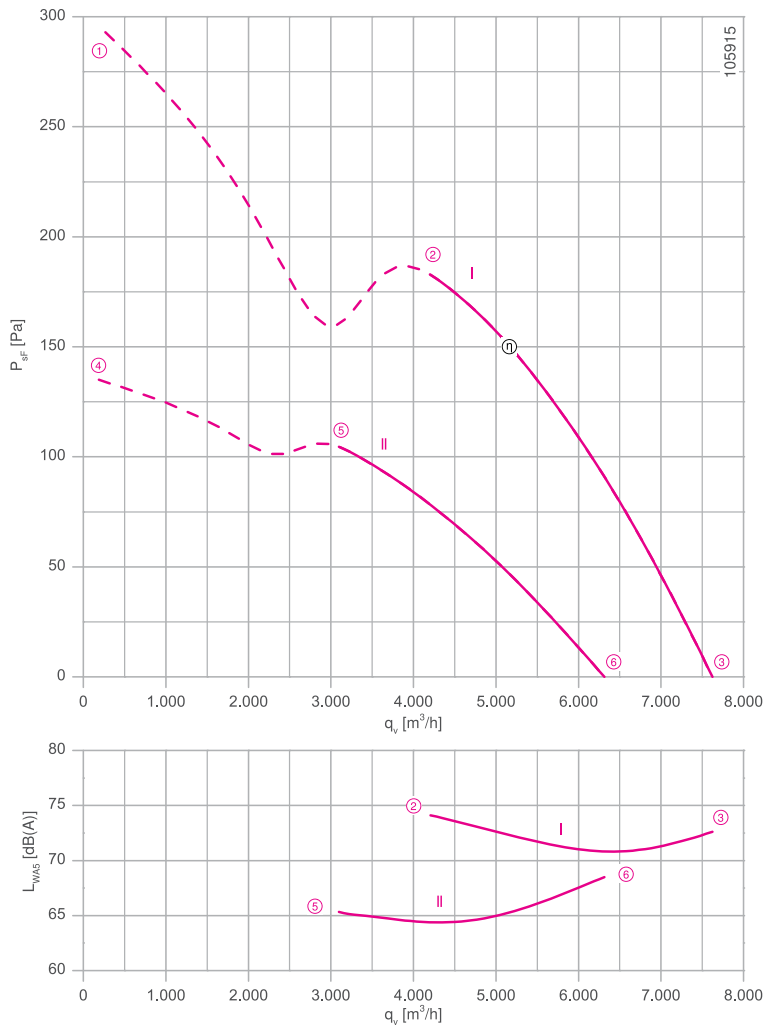

Measured in ZAplus without guard grille in installation type A according to ISO 5801

Connection diagram Page 531
1360-108XA

System components Page 430

Dimensions mm

Airflow direction

Design L - ZAplus Ontop, guard grille suction side

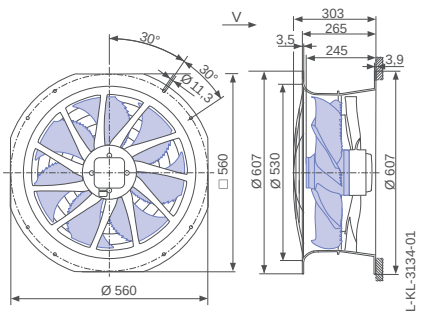

Airflow direction

Design L - ZAplus Ontop without guard grille

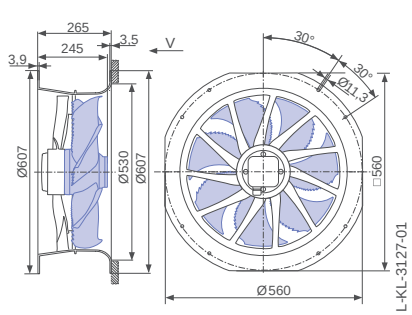

Design L - ZAplus Ontop, guard grille pressure side

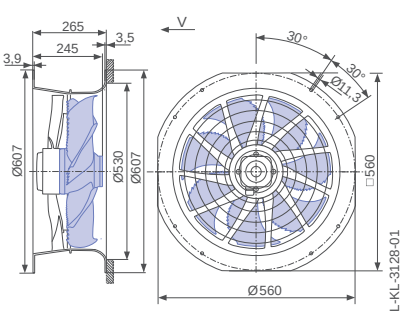

Performance data

Type	Connection	Characteristic curve	Voltage U V	Operating point	Current I A	Input power P_1 W	Speed n min^{-1}	Suction side sound power level L_{WA5} dB(A)
ZN045-VD_.4F._7P1	Δ	I	400	①	1.30	700	1300	
			400*	②	**1.10***	**560***	**1350***	74
			400	③	0.92	420	1400	73
	Y	II	400	④	0.76	420	880	
			400*	⑤	**0.68***	**380***	**1010***	66
			400	⑥	0.58	320	1160	69

*rated data

Fan ordering information

Airflow direction		Airflow direction				
Design	L (guard grille suction side) Ontop	L (without guard grille) Ontop	L (guard grille pressure side) Ontop	Q (without guard grille)	Q (guard grille pressure side)	H (guard grille pressure side) Flattop
	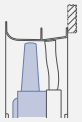		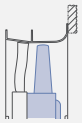	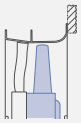		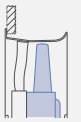
Type **Article no.**	**ZN045-VDL.4F.V7P1** **166920**	**ZN045-VDL.4F.V7P1** **166830**	**ZN045-VDL.4F.V7P1** **166831**	**ZN045-VDQ.4F.V7P1** **166835**	**ZN045-VDQ.4F.V7P1** **166836**	**ZN045-VDH.4F.V7P1** **166840**
Weight kg	13.60	12.60	13.20	13.30	14.00	13.20

ZAplus attachable on both sides.

Control technology

Frequency inverters Fcontrol 3~	Motor protection units 3~	Electronic voltage controllers 3~
		
Page 480	Page 518	Page 506

Design Q - ZAplus with adapter plate, without guard grille

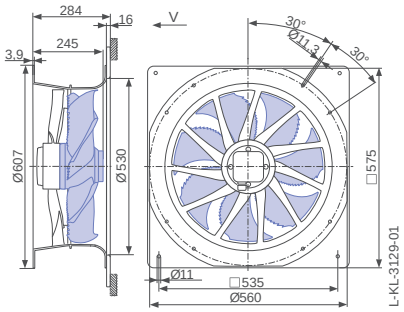

Design Q - ZAplus with adapter plate, guard grille pressure side

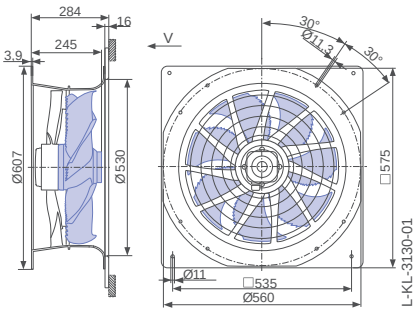

Design H - ZAplus Flattop, guard grille pressure side

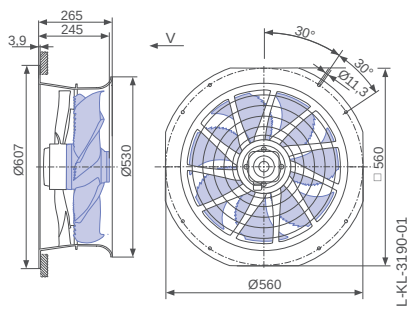

FE2owlet with ZAplus

for three phase alternating current, 6-6 pole

ZN045-SD



Characteristic curve

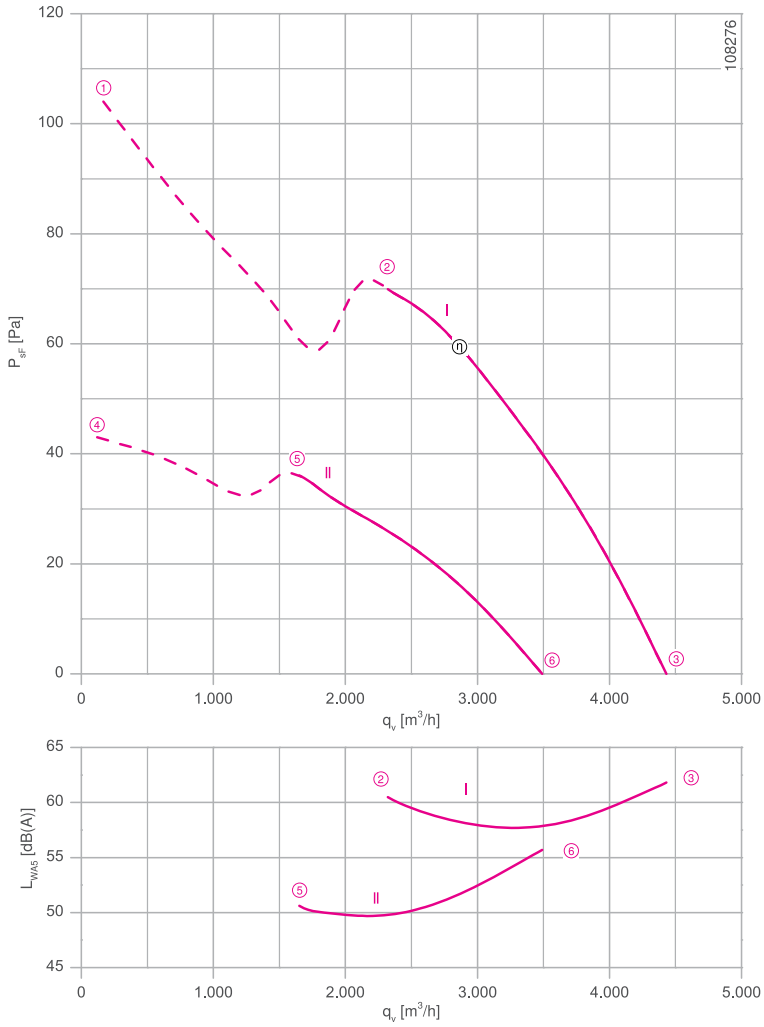

Measured in ZAplus without guard grille in installation type A according to ISO 5801

Description

Motor technology: AC
Rated voltage U_N: **3~ 400 V (Δ/Y) ±10 %***
Rated frequency f_N: **50 Hz*** (60Hz data available)
Input power P_1: **170/95 W***
Rated current I_N: **0.38/0.175 A***
Rated speed n_N: **840/ 600 min^{-1}***
Starting current I_A: 0.75 / 0.26 A
Current increase ΔI: 0 %
Thermal class: **THCL155***
Min. permitted ambient temperature $t_{R(min)}$: -40 °C
Max. permitted ambient temperature $t_{R(max)}$: 70 °C
Electrical connection: Terminal box
Number of blades: 7
Protection class: IP54
Motor protection: thermal contact
Blades: High Performance Composite Material, uncoated,
Rotor: Aluminium, 1 coat paint, jet black
Conformity: ErP 2015, CE
ErP-data
Efficiency η_{statA}: 29.1 %
Efficiency: N_{actual} = 40.3 / N_{target} = 40**
* Rated data
**ErP 2015

Connection diagram Page 531
1360-108XA

System components Page 430

Dimensions mm

Airflow direction

Design L - ZAplus Ontop, guard grille suction side

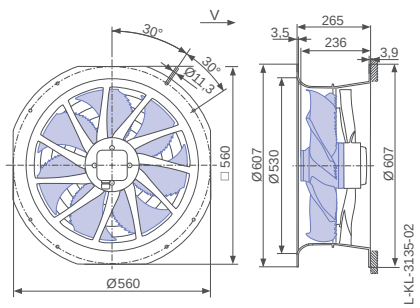

Airflow direction

Design L - ZAplus Ontop without guard grille

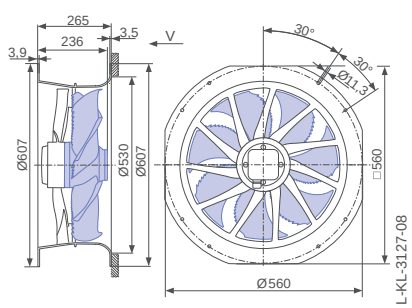

Design L - ZAplus Ontop, guard grille pressure side

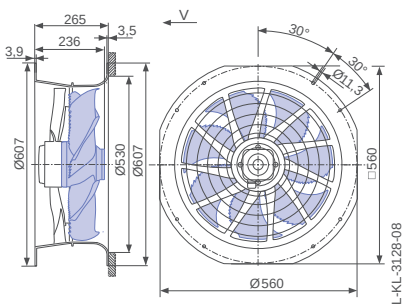

Performance data

Type	Connection	Characteristic curve	Voltage U V	Operating point	Current I A	Input power P_1 W	Speed n min^{-1}	Suction side sound power level L_{WA5} dB(A)
ZN045-SD_.2C._7P3	Δ	I	400	①	0.42	210	780	
			400*	②	**0.38***	**170***	**840***	61
			400	③	0.35	140	890	62
	Y	II	400	④	0.19	100	500	
			400*	⑤	**0.17***	**95***	**600***	51
			400	⑥	0.15	80	710	56

*rated data

Fan ordering information

Airflow direction ⟷ Airflow direction

Design	L (guard grille suction side) Ontop	L (without guard grille) Ontop	L (guard grille pressure side) Ontop	Q (without guard grille)	Q (guard grille pressure side)	H (guard grille pressure side) Flattop
	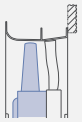		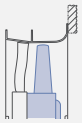	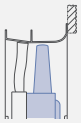		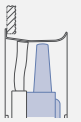
Type **Article no.**	**ZN045-SDL.2C.V7P3** **166923**	**ZN045-SDL.2C.V7P3** **166896**	**ZN045-SDL.2C.V7P3** **166897**	**ZN045-SDQ.2C.V7P3** **166901**	**ZN045-SDQ.2C.V7P3** **166902**	**ZN045-SDH.2C.V7P3** **166906**
Weight kg	8.50	7.40	8.10	8.20	8.80	8.10

ZAplus attachable on both sides.

Control technology

Frequency inverters Fcontrol 3~	Motor protection units 3~	Electronic voltage controllers 3~
		
Page 480	Page 518	Page 506

Design Q - ZAplus with adapter plate, without guard grille

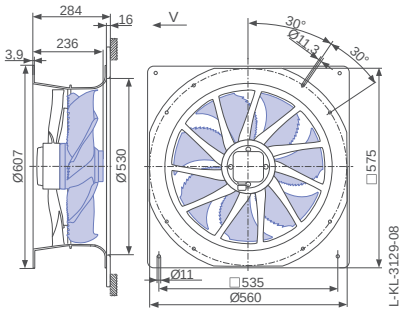

Design Q - ZAplus with adapter plate, guard grille pressure side

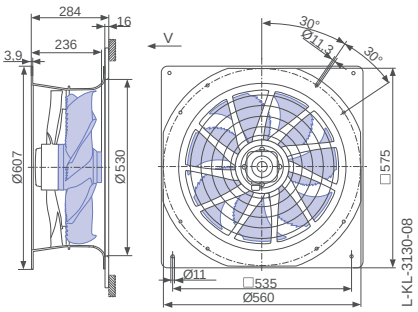

Design H - ZAplus Flattop, guard grille pressure side

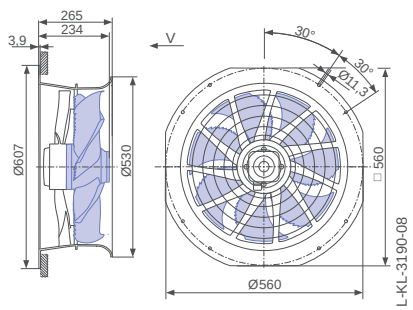

FE2owlet with ZAplus

for three phase alternating current, 6-6 pole

ZN045-SD



Description

Motor technology: AC
Rated voltage U_N: **3~ 400 V (Δ/Y) ±10 %***
Rated frequency f_N: **50 Hz*** (60Hz data available)
Input power P_1: **190/110 W***
Rated current I_N: **0.50/0.27 A***
Rated speed n_N: **910/ 650 min^{-1}***
Starting current I_A: 1.10 / 0.32 A
Current increase ΔI: 0 %
Thermal class: **THCL155***
Min. permitted ambient temperature $t_{R(min)}$: -40 °C
Max. permitted ambient temperature $t_{R(max)}$: 70 °C
Electrical connection: Terminal box
Number of blades: 7
Protection class: IP54
Motor protection: thermal contact
Blades: Aluminium, uncoated
Rotor: Aluminium, uncoated
Conformity: ErP 2015, CE
ErP-data
Efficiency η_{statA}: 36.6 %
Efficiency: N_{actual} = 47.5 / N_{target} = 40**
* Rated data
**ErP 2015

Characteristic curve

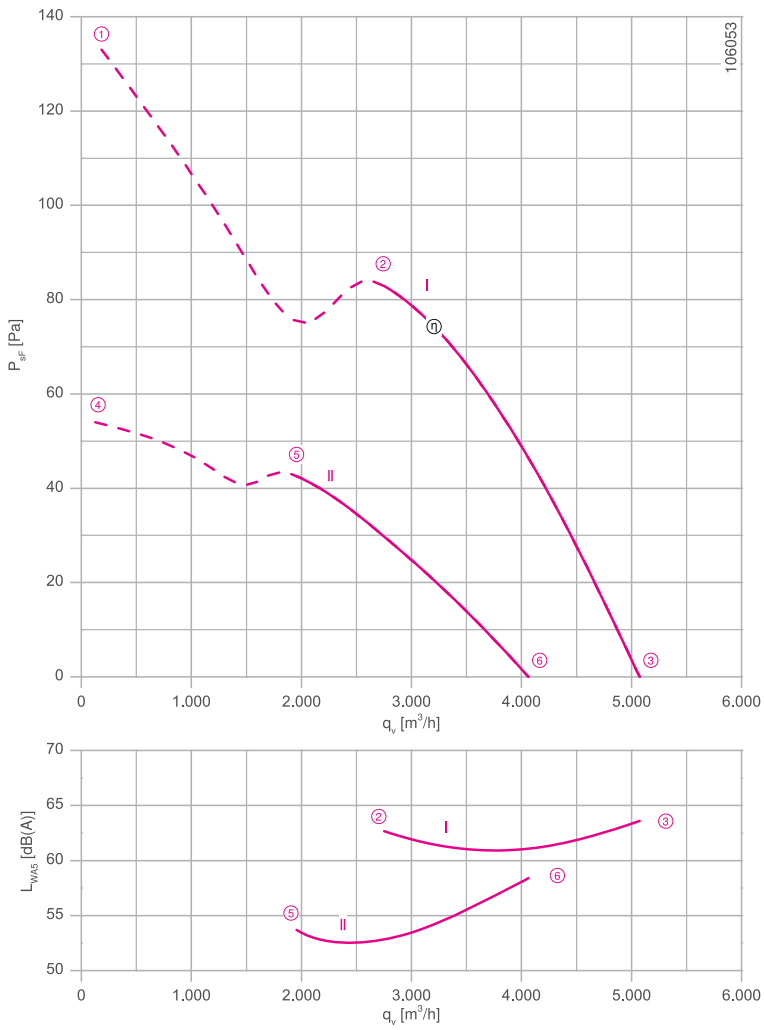

Measured in ZAplus without guard grille in installation type A according to ISO 5801

Connection diagram Page 531
1360-108XA

System components Page 430

Dimensions mm

Airflow direction

Design L - ZAplus Ontop, guard grille suction side

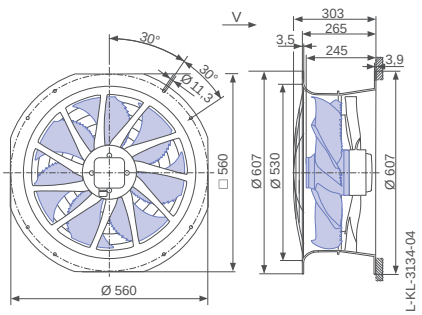

Airflow direction

Design L - ZAplus Ontop without guard grille

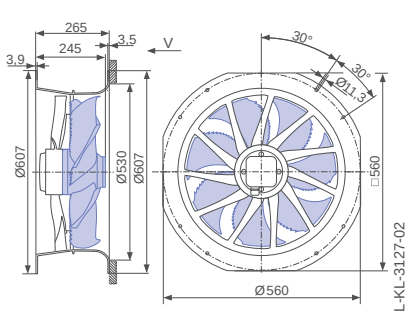

Design L - ZAplus Ontop, guard grille pressure side

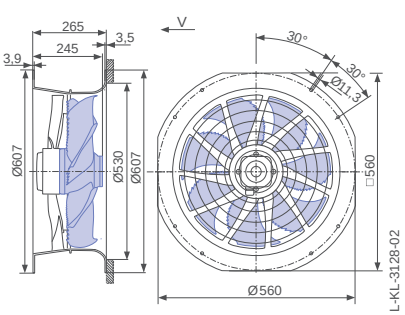

Performance data

Type	Connection	Characteristic curve	Voltage U V	Operating point	Current I A	Input power P_1 W	Speed n min^{-1}	Suction side sound power level L_{WA5} dB(A)
ZN045-SD_.4F._7P1	Δ	I	400	①	0.58	240	870	
			400*	②	**0.50***	**190***	**910***	63
			400	③	0.46	150	940	64
	Y	II	400	④	0.29	120	560	
			400*	⑤	**0.27***	**110***	**640***	54
			400	⑥	0.24	100	750	58

*rated data

Fan ordering information

Airflow direction → Airflow direction

Design	L (guard grille suction side) Ontop	L (without guard grille) Ontop	L (guard grille pressure side) Ontop	Q (without guard grille)	Q (guard grille pressure side)	H (guard grille pressure side) Flattop
	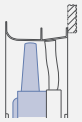		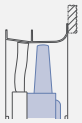	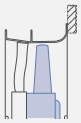		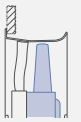
Type **Article no.**	**ZN045-SDL.4F.V7P1** **169869**	**ZN045-SDL.4F.V7P1** **166852**	**ZN045-SDL.4F.V7P1** **166853**	**ZN045-SDQ.4F.V7P1** **166857**	**ZN045-SDQ.4F.V7P1** **166858**	**ZN045-SDH.4F.V7P1** **166862**
Weight kg	13.60	12.60	13.20	13.30	14.00	13.20

ZAplus attachable on both sides.

Control technology

Frequency inverters Fcontrol 3~	Motor protection units 3~	Electronic voltage controllers 3~
		
Page 480	Page 518	Page 506

Design Q - ZAplus with adapter plate, without guard grille

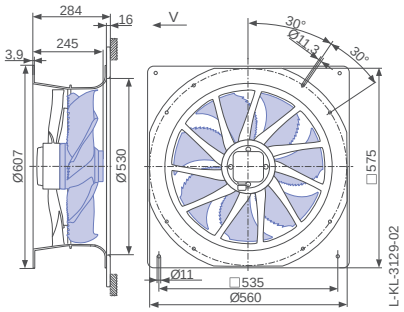

Design Q - ZAplus with adapter plate, guard grille pressure side

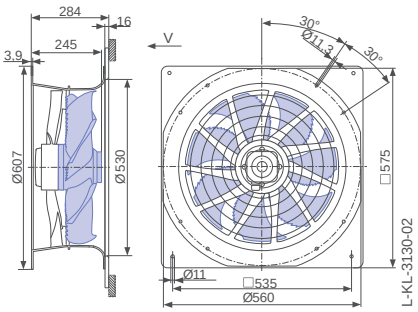

Design H - ZAplus Flattop, guard grille pressure side

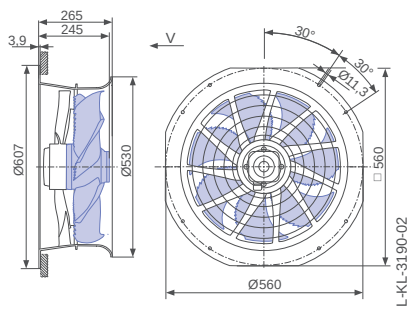

FE2owlet with ZAplus

for single phase alternating current, 4 pole

ZN050-4E



Description

Motor technology: AC
Rated voltage U_N: **1~ 230 V±10 %***
Rated frequency f_N: **50 Hz*** (60Hz data available)
Input power P_1: **0.72 kW***
Rated current I_N: **3.20 A***
Rated speed n_N: **1230 min^{-1}***
Starting current I_A: 6.50 A
Current increase ΔI: 0 %
Service capacitor C_{400V}: 16.0 µF
Thermal class: **THCL155***
Min. permitted ambient temperature $t_{R(min)}$: -25 °C
Max. permitted ambient temperature $t_{R(max)}$: 70 °C
Electrical connection: Terminal box
Number of blades: 7
Protection class: IP54
Motor protection: thermal contact
Blades: Aluminium, uncoated
Rotor: Aluminium, uncoated
Conformity: ErP 2015, CE
ErP-data
Efficiency η_{statA}: 35.8 %
Efficiency: N_{actual} = 43.1 / N_{target} = 40**
* Rated data
**ErP 2015

Characteristic curve

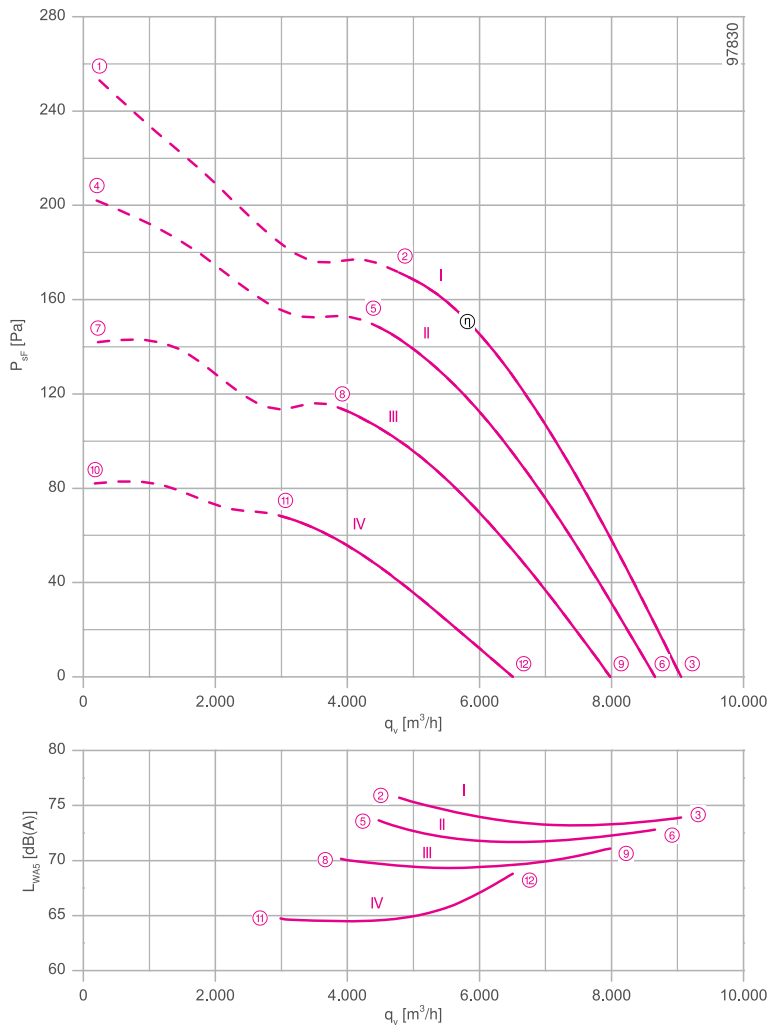

Measured in ZAplus without guard grille in installation type A according to ISO 5801

Connection diagram Page 531
1360-104XA

System components Page 430

Dimensions mm

Airflow direction

Design L - ZAplus Ontop, guard grille suction side

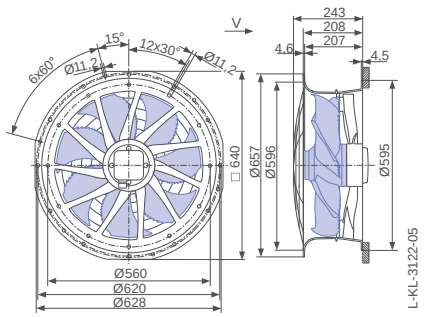

Airflow direction

Design L - ZAplus Ontop without guard grille

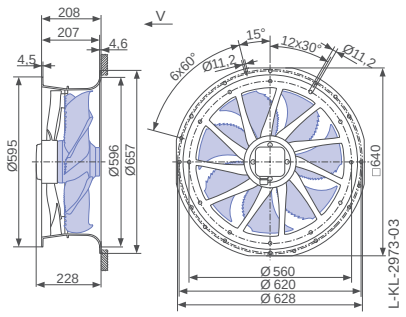

Design L - ZAplus Ontop, guard grille pressure side

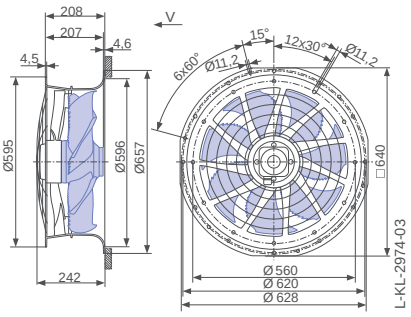

Performance data

Type	Characteristic curve	Voltage U V	Operating point	Current I A	Input power P_1 W	Speed n min^{-1}	Suction side sound power level L_{WA5} dB(A)
ZN050-4E_.4I._7P1	I	230	①	3.70	840	1120	
		230*	②	**3.20***	**720***	**1230***	76
		230	③	2.60	600	1310	74
	II	200	④	3.70	720	1000	
		200	⑤	3.20	620	1140	74
		200	⑥	2.60	520	1260	73
	III	170	⑦	3.40	560	840	
		170	⑧	3.10	520	1000	71
		170	⑨	2.60	440	1160	71
	IV	135	⑩	2.90	370	640	
		135	⑪	2.80	360	780	65
		135	⑫	2.50	330	950	69

*rated data

Fan ordering information

Airflow direction	Airflow direction				
Design	L (guard grille suction side) Ontop	L (without guard grille) Ontop	L (guard grille pressure side) Ontop	Q (guard grille pressure side)	H (guard grille pressure side) Flattop
	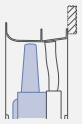		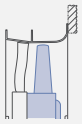		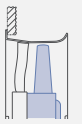
Type **Article no.**	**ZN050-4EL.4I.V7P1** **169875**	**ZN050-4EL.4I.V7P1** **161772**	**ZN050-4EL.4I.V7P1** **161773**	**ZN050-4EQ.4I.V7P1** **161777**	**ZN050-4EH.4I.V7P1** **161779**
Weight kg	16.20	14.90	16.00	17.30	15.40
ZAplus attachable on both sides.					

Control technology

Frequency inverters Fcontrol 1~	Motor protection units 1~	Electronic voltage controllers 1~
		
Page 474	Page 518	Page 492

Design Q - ZAplus with adapter plate, guard grille pressure side

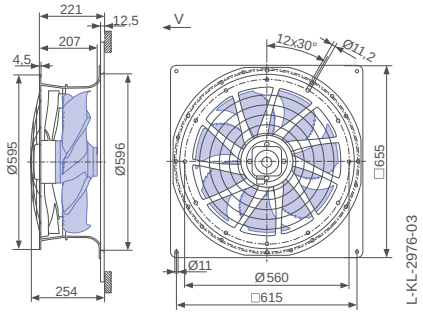

Design H - ZAplus Flattop, guard grille pressure side

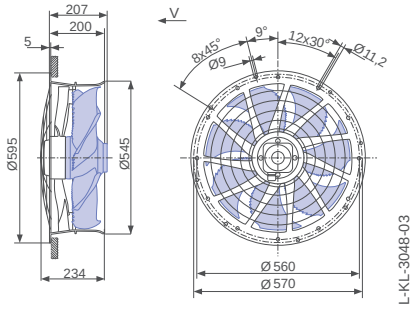

FE2owlet with ZAplus

for single phase alternating current, 6 pole

ZN050-6E



Description

Motor technology: AC
Rated voltage U_N: **1~ 230 V±10 %***
Rated frequency f_N: **50 Hz*** (60Hz data available)
Input power P_1: **290 W***
Rated current I_N: **1.30 A***
Rated speed n_N: **900 min^{-1}***
Starting current I_A: 2.60 A
Current increase ΔI: 5 %
Service capacitor C_{400V}: 10,0 µF
Thermal class: **THCL155***
Min. permitted ambient temperature $t_{R(min)}$: -25 °C
Max. permitted ambient temperature $t_{R(max)}$: 70 °C
Electrical connection: Terminal box
Number of blades: 7
Protection class: IP54
Motor protection: thermal contact
Blades: Aluminium, uncoated
Rotor: Aluminium, uncoated
Conformity: ErP 2015, CE
ErP-data
Efficiency η_{statA}: 35.0 %
Efficiency: N_{actual} = 44.8 / N_{target} = 40**
* Rated data
**ErP 2015

Characteristic curve

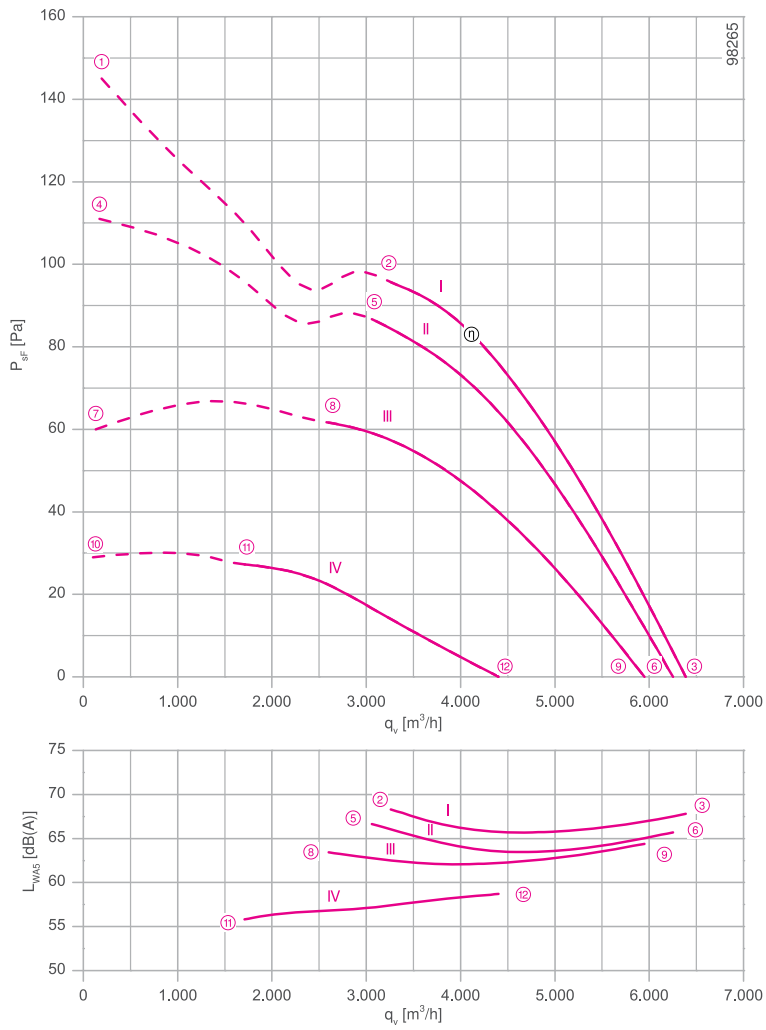

Measured in ZAplus without guard grille in installation type A according to ISO 5801

Connection diagram Page 531
1360-104XA

System components Page 430

Dimensions mm

Airflow direction

Design L - ZAplus Ontop, guard grille suction side

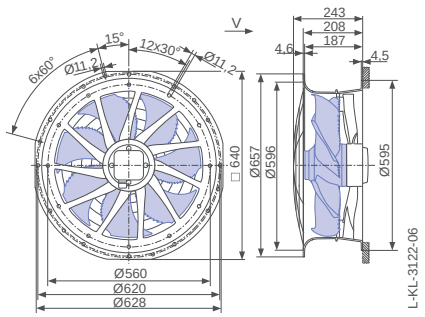

Airflow direction

Design L - ZAplus Ontop without guard grille

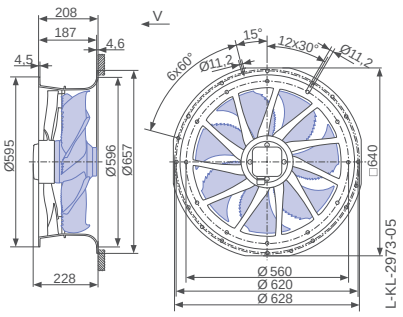

Design L - ZAplus Ontop, guard grille pressure side

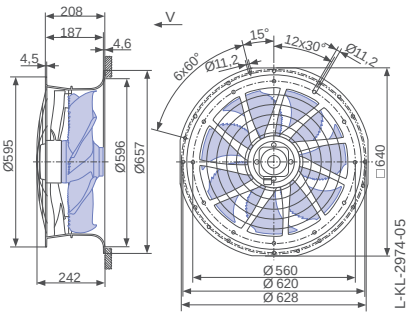

Performance data

Type	Characteristic curve	Voltage U V	Operating point	Current I A	Input power P_1 W	Speed n min^{-1}	Suction side sound power level L_{WA5} dB(A)
ZN050-6E_.4F._7P1	I	230	①	1.55	340	840	
		230*	②	**1.30***	**290***	**900***	68
		230	③	1.10	240	930	68
	II	200	④	1.60	300	730	
		200	⑤	1.30	250	850	67
		200	⑥	1.05	200	910	66
	III	170	⑦	1.50	220	540	
		170	⑧	1.35	210	720	64
		170	⑨	1.05	180	870	64
	IV	135	⑩	1.20	140	380	
		135	⑪	1.20	140	480	56
		135	⑫	1.10	140	650	59

*rated data

Fan ordering information

Airflow direction → Airflow direction

Design	L (guard grille suction side) Ontop	L (without guard grille) Ontop	L (guard grille pressure side) Ontop	Q (guard grille pressure side)	H (guard grille pressure side) Flattop
	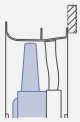		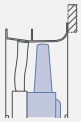		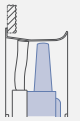
Type	**ZN050-6EL.4F.V7P1**	**ZN050-6EL.4F.V7P1**	**ZN050-6EL.4F.V7P1**	**ZN050-6EQ.4F.V7P1**	**ZN050-6EH.4F.V7P1**
Article no.	**169876**	**161788**	**161789**	**161793**	**161795**
Weight kg	14.70	13.40	14.50	15.80	13.90

ZAplus attachable on both sides.

Control technology

Frequency inverters Fcontrol 1~	Motor protection units 1~	Electronic voltage controllers 1~
		
Page 474	Page 518	Page 492

Design Q - ZAplus with adapter plate, guard grille pressure side

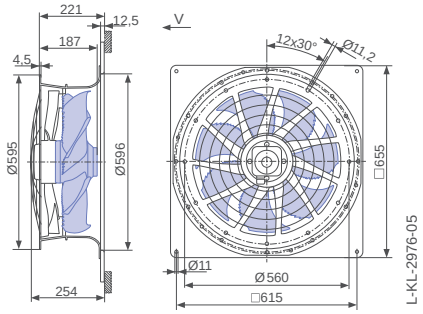

Design H - ZAplus Flattop, guard grille pressure side

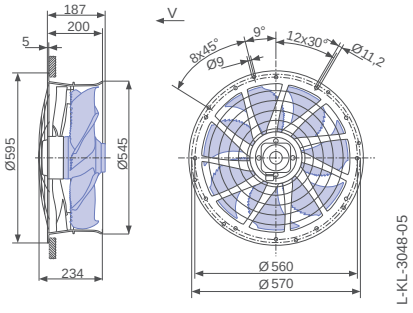

FE2owlet with ZAplus

for single phase alternating current, 8 pole

ZN050-8E



Characteristic curve

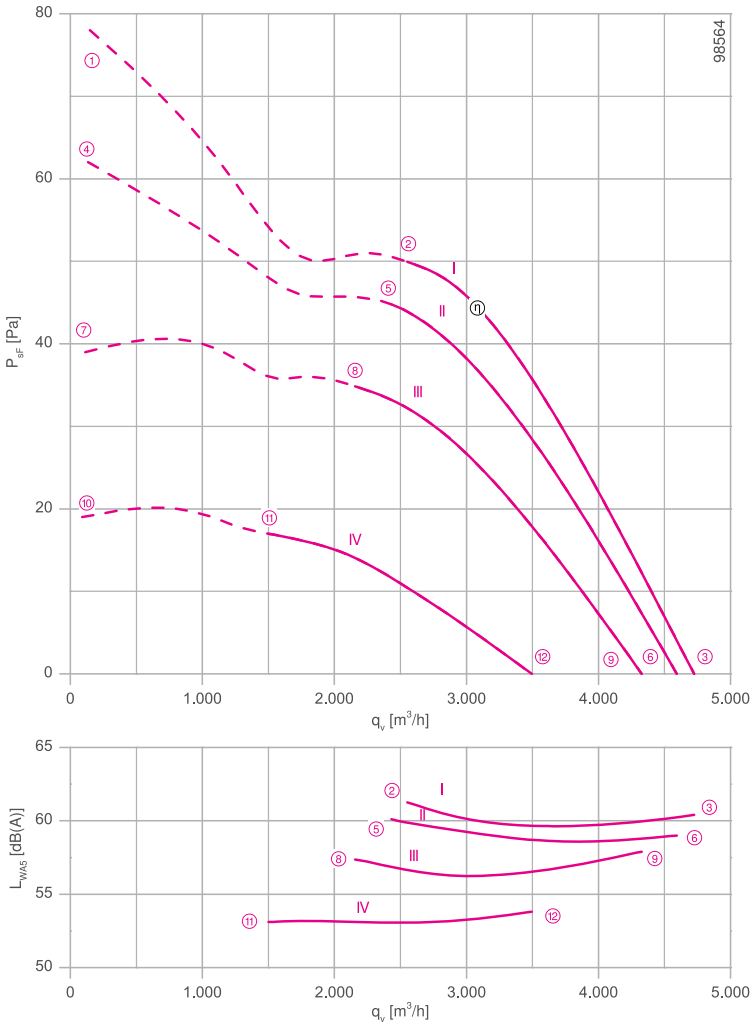

Measured in ZAplus without guard grille in installation type A according to ISO 5801

Description

Motor technology: AC
Rated voltage U_N: **1~ 230 V±10 %***
Rated frequency f_N: **50 Hz*** (60Hz data available)
Input power P_1: **140 W***
Rated current I_N: **0.68 A***
Rated speed n_N: **670 min^{-1}***
Starting current I_A: 1.30 A
Current increase ΔI: 0 %
Service capacitor C_{400V}: 3.0 µF
Thermal class: **THCL155***
Min. permitted ambient temperature $t_{R(min)}$: -25 °C
Max. permitted ambient temperature $t_{R(max)}$: 70 °C
Electrical connection: Terminal box
Number of blades: 7
Protection class: IP54
Motor protection: thermal contact
Blades: Aluminium, uncoated
Rotor: Aluminium, uncoated
Conformity: ErP 2015, CE
ErP-data
Efficiency η_{statA}: 28.3 %
Efficiency: N_{actual} = 40.0 / N_{target} = 40**
* Rated data
**ErP 2015

Connection diagram	Page 531 1360-104XA
System components	Page 430

Dimensions mm

Airflow direction

Design L - ZAplus Ontop, guard grille suction side

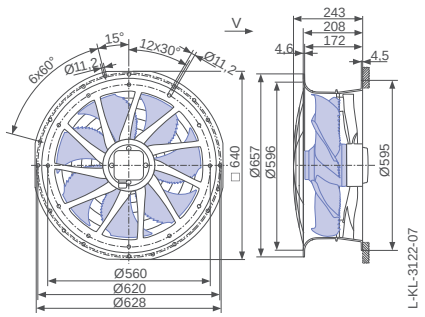

Airflow direction

Design L - ZAplus Ontop without guard grille

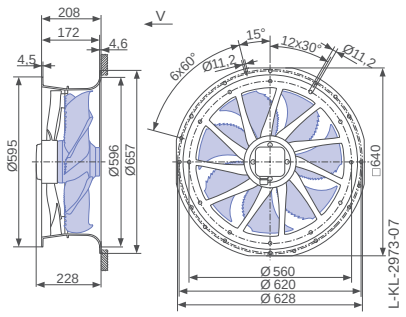

Design L - ZAplus Ontop, guard grille pressure side

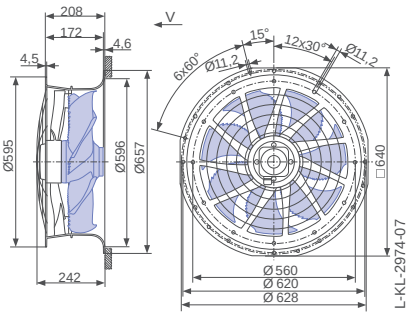

Performance data

Type	Characteristic curve	Voltage U V	Operating point	Current I A	Input power P_1 W	Speed n min^{-1}	Suction side sound power level L_{WA5} dB(A)
ZN050-8E_.4C.V7P1	I	230	①	0.80	170	620	
		230*	②	**0.68***	**140***	**670***	61
		230	③	0.60	120	690	60
	II	200	④	0.80	150	560	
		200	⑤	0.66	120	630	60
		200	⑥	0.56	100	680	59
	III	170	⑦	0.78	120	440	
		170	⑧	0.68	110	560	57
		170	⑨	0.56	85	640	58
	IV	135	⑩	0.66	80	310	
		135	⑪	0.64	75	400	53
		135	⑫	0.58	70	520	54

*rated data

Fan ordering information

Airflow direction → Airflow direction

Design	L (guard grille suction side) Ontop	L (without guard grille) Ontop	L (guard grille pressure side) Ontop	Q (guard grille pressure side)	H (guard grille pressure side) Flattop
	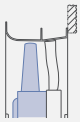		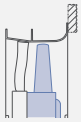		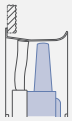
Type	**ZN050-8EL.4C.V7P1**	**ZN050-8EL.4C.V7P1**	**ZN050-8EL.4C.V7P1**	**ZN050-8EQ.4C.V7P1**	**ZN050-8EH.4C.V7P1**
Article no.	**169877**	**161804**	**161805**	**161809**	**161811**
Weight kg	13.00	11.70	12.80	14.10	12.20

ZAplus attachable on both sides.

Control technology

Frequency inverters Fcontrol 1~	Motor protection units 1~	Electronic voltage controllers 1~
		
Page 474	Page 518	Page 492

Design Q - ZAplus with adapter plate, guard grille pressure side

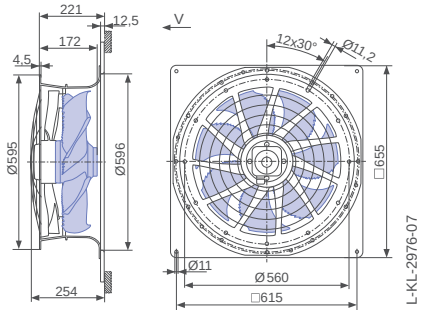

Design H - ZAplus Flattop, guard grille pressure side

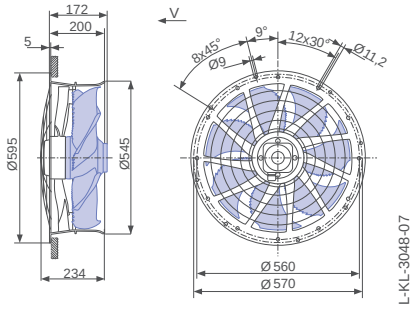

FE2owlet with ZAplus

for three phase alternating current, 4-4 pole

ZN050-VD



Description

Motor technology: AC
Rated voltage U_N: **3~ 400 V (Δ/Y) ±10 %***
Rated frequency f_N: **50 Hz***
Input power P_1: **0.80/0.54 kW***
Rated current I_N: **1.40/0.94 A***
Rated speed n_N: **1330/ 960 min^{-1}***
Starting current I_A: 5.00 / 1.60 A
Current increase ΔI: 15 %
Thermal class: **THCL155***
Min. permitted ambient temperature $t_{R(min)}$: -40 °C
Max. permitted ambient temperature $t_{R(max)}$: 70 °C
Electrical connection: Terminal box
Number of blades: 7
Protection class: IP54
Motor protection: thermal contact
Blades: Aluminium, uncoated
Rotor: Aluminium, uncoated
Conformity: ErP 2015, CE
ErP-data
Efficiency η_{statA}: 41.2 %
Efficiency: N_{actual} = 48.3 / N_{target} = 40**
* Rated data
**ErP 2015

Characteristic curve

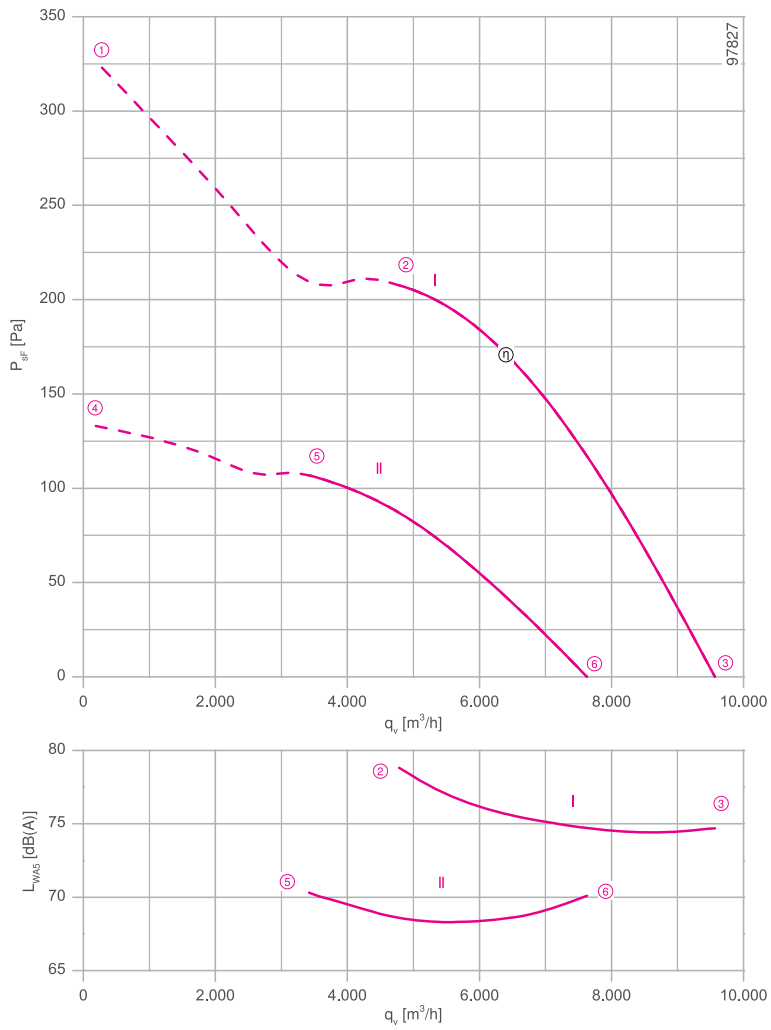

Measured in ZAplus without guard grille in installation type A according to ISO 5801

Connection diagram Page 531
1360-108XA

System components Page 430

Dimensions mm

Airflow direction

Design L - ZAplus Ontop, guard grille suction side

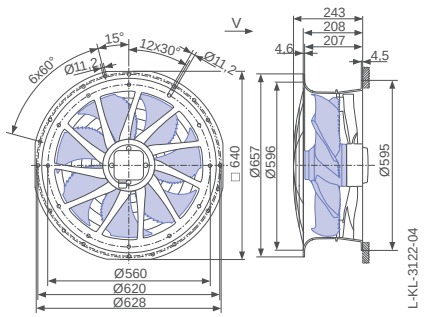

Airflow direction

Design L - ZAplus Ontop without guard grille

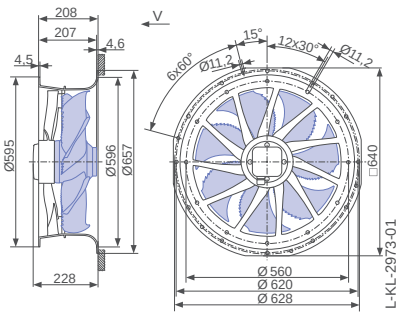

Design L - ZAplus Ontop, guard grille pressure side

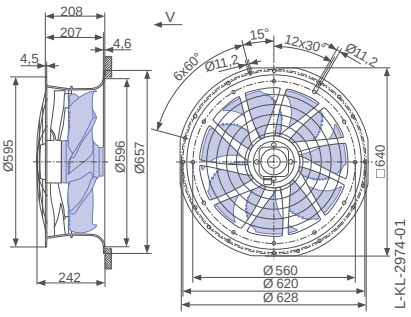

Performance data

Type	Connection	Characteristic curve	Voltage U V	Operating point	Current I A	Input power P_1 W	Speed n min^{-1}	Suction side sound power level L_{WA5} dB(A)
ZN050-VD_.4I.V7P1	Δ	I	400	①	1.80	1050	1260	
			400*	②	**1.40***	**800***	**1330***	79
			400	③	1.10	580	1390	75
	Y	II	400	④	1.05	580	810	
			400*	⑤	**0.94***	**540***	**950***	71
			400	⑥	0.78	460	1110	70

*rated data

Fan ordering information

Airflow direction → Airflow direction

Design	L (guard grille suction side) Ontop	L (without guard grille) Ontop	L (guard grille pressure side) Ontop	Q (guard grille pressure side)	H (guard grille pressure side) Flattop
	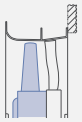		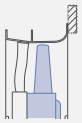	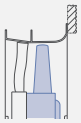	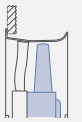
Type **Article no.**	**ZN050-VDL.4I.V7P1** **169874**	**ZN050-VDL.4I.V7P1** **161756**	**ZN050-VDL.4I.V7P1** **161757**	**ZN050-VDQ.4I.V7P1** **161761**	**ZN050-VDH.4I.V7P1** **161763**
Weight kg	16.20	14.90	16.00	17.30	15.40

ZAplus attachable on both sides.

Control technology

Frequency inverters Fcontrol 3~	Motor protection units 3~	Electronic voltage controllers 3~
		
Page 480	Page 518	Page 506

Design Q - ZAplus with adapter plate, guard grille pressure side

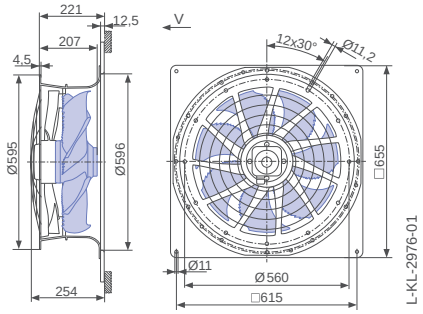

Design H - ZAplus Flattop, guard grille pressure side

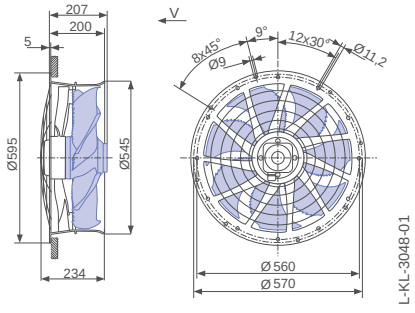

FE2owlet with ZAplus

for three phase alternating current, 4-4 pole

ZN050-VD



Description

Motor technology: AC
Rated voltage U_N: **3~ 400 V (Δ/Y) ±10 %***
Rated frequency f_N: **50 Hz*** (60Hz data available)
Input power P_1: **0.74/0.46 kW***
Rated current I_N: **1.60/0.80 A***
Rated speed n_N: **1290/1020 min^{-1}***
Current increase ΔI: 0 %
Thermal class: **THCL155***
Min. permitted ambient temperature $t_{R(min)}$: -40 °C
Max. permitted ambient temperature $t_{R(max)}$: 70 °C
Electrical connection: Terminal box
Number of blades: 7
Protection class: IP54
Motor protection: thermal contact
Blades: Aluminium, uncoated
Rotor: Aluminium, uncoated
Conformity: ErP 2015, CE
ErP-data
Efficiency η_{statA}: 41.0 %
Efficiency: N_{actual} = 48.3 / N_{target} = 40**
* Rated data
**ErP 2015

Characteristic curve

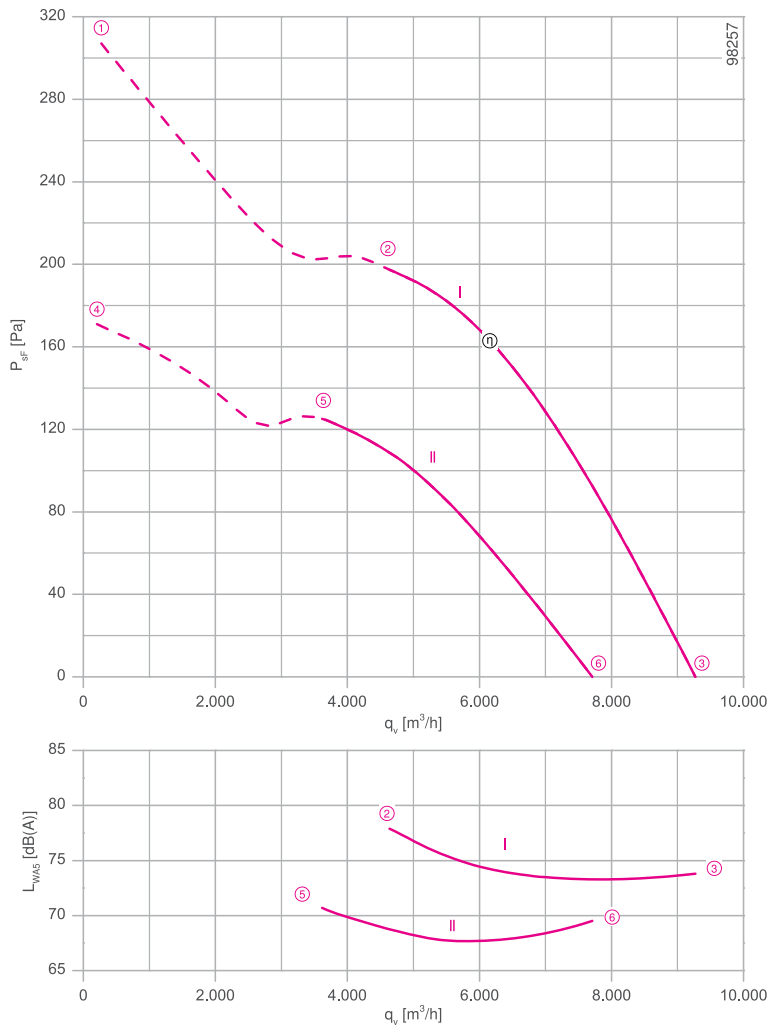

Measured in ZAplus without guard grille in installation type A according to ISO 5801

Connection diagram Page 531
1360-108XA

System components Page 430

Dimensions mm

Airflow direction

Design L - ZAplus Ontop, guard grille suction side

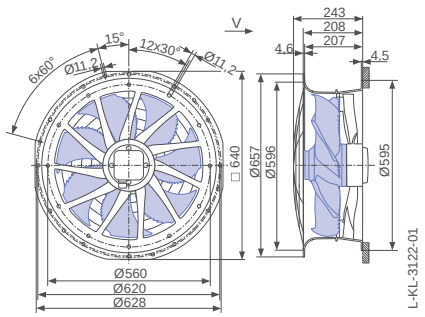

Airflow direction

Design L - ZAplus Ontop without guard grille

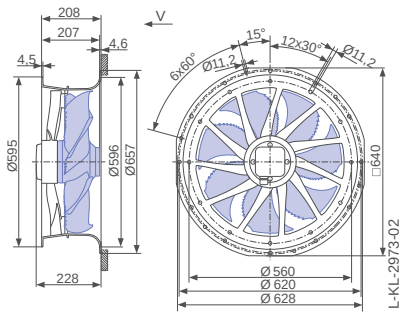

Design L - ZAplus Ontop, guard grille pressure side

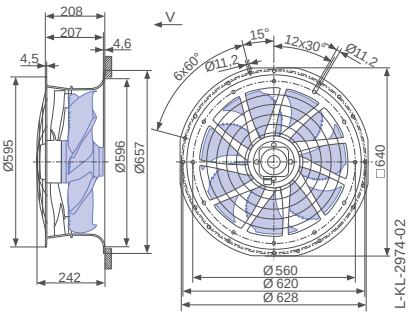

Performance data

Type	Connection	Characteristic curve	Voltage U V	Operating point	Current I A	Input power P_1 W	Speed n min^{-1}	Suction side sound power level L_{WA5} dB(A)
ZN050-VD_.4I.V7P1	Δ	I	400	①	1.80	900	1230	
			400*	②	**1.60***	**740***	**1290***	78
			400	③	1.45	560	1340	74
	Y	II	400	④	0.90	520	910	
			400*	⑤	**0.80***	**460***	**1020***	71
			400	⑥	0.68	380	1120	70

*rated data

Fan ordering information

Airflow direction		Airflow direction		
Design	L (guard grille suction side) Ontop	L (without guard grille) Ontop	L (guard grille pressure side) Ontop	Q (guard grille pressure side)	H (guard grille pressure side) Flattop
	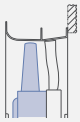		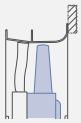		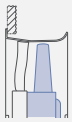
Type **Article no.**	**ZN050-VDL.4I.V7P1** **165327**	**ZN050-VDL.4I.V7P1** **161764**	**ZN050-VDL.4I.V7P1** **161765**	**ZN050-VDQ.4I.V7P1** **161769**	**ZN050-VDH.4I.V7P1** **161771**
Weight kg	16.20	14.90	16.00	17.30	15.40

ZAplus attachable on both sides.

Control technology

Frequency inverters Fcontrol 3~	Motor protection units 3~	Electronic voltage controllers 3~
		
Page 480	Page 518	Page 506

Design Q - ZAplus with adapter plate, guard grille pressure side

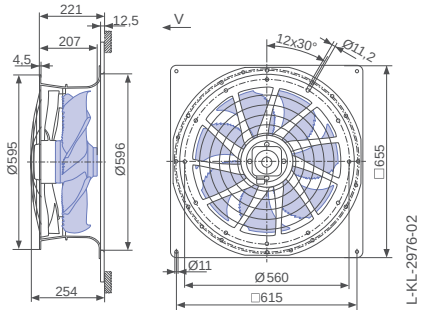

Design H - ZAplus Flattop, guard grille pressure side

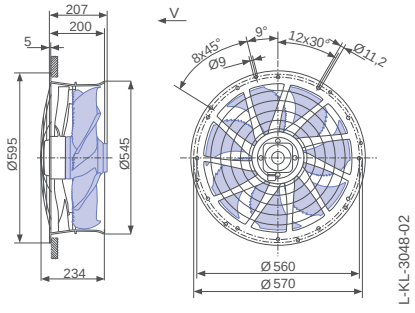

FE2owlet with ZAplus

for three phase alternating current, 6-6 pole

ZN050-SD



Description

Motor technology: AC
Rated voltage U_N: **3~ 400 V (Δ/Y) ±10 %***
Rated frequency f_N: **50 Hz*** (60Hz data available)
Input power P_1: **270/150 W***
Rated current I_N: **0.66/0.34 A***
Rated speed n_N: **880/ 600 min^{-1}***
Starting current I_A: 1.50 / 0.40 A
Current increase ΔI: 0 %
Thermal class: **THCL155***
Min. permitted ambient temperature $t_{R(min)}$: -40 °C
Max. permitted ambient temperature $t_{R(max)}$: 70 °C
Electrical connection: Terminal box
Number of blades: 7
Protection class: IP54
Motor protection: thermal contact
Blades: Aluminium, uncoated
Rotor: Aluminium, uncoated
Conformity: ErP 2015, CE
ErP-data
Efficiency η_{statA}: 33.8 %
Efficiency: N_{actual} = 43.8 / N_{target} = 40**
* Rated data
**ErP 2015

Characteristic curve

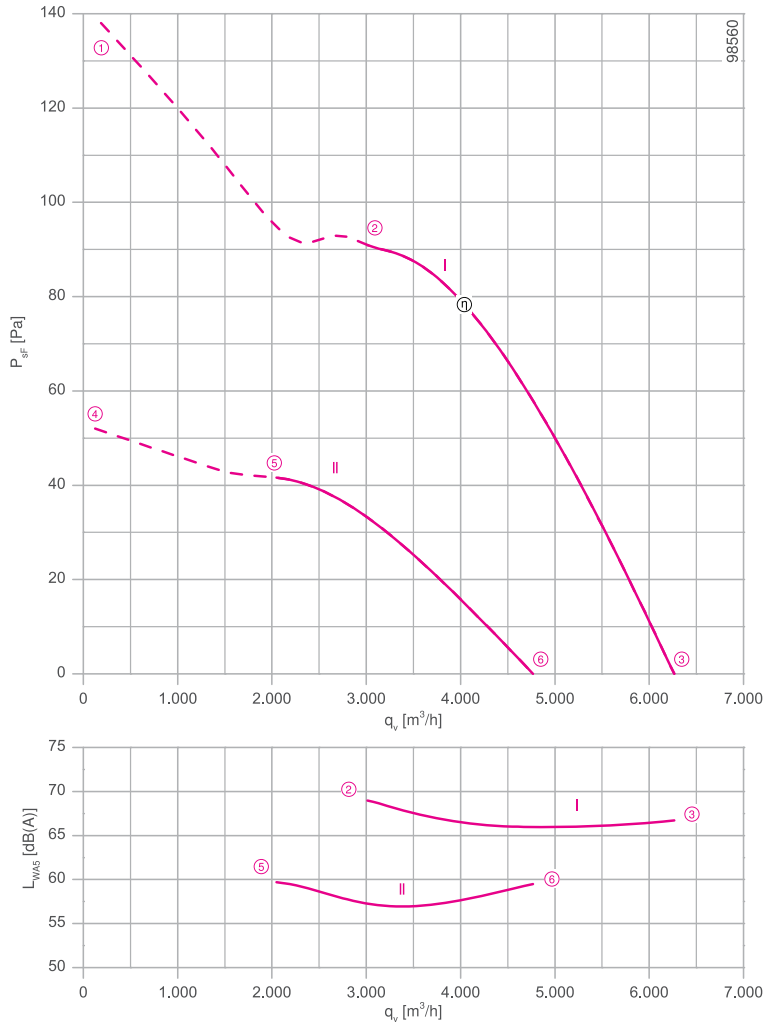

Measured in ZAplus without guard grille in installation type A according to ISO 5801

Connection diagram Page 531
1360-108XA

System components Page 430

Dimensions mm

Airflow direction

Design L - ZAplus Ontop, guard grille suction side

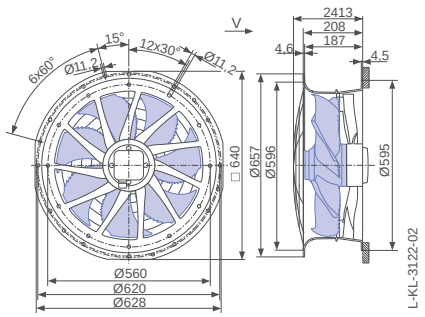

Airflow direction

Design L - ZAplus Ontop without guard grille

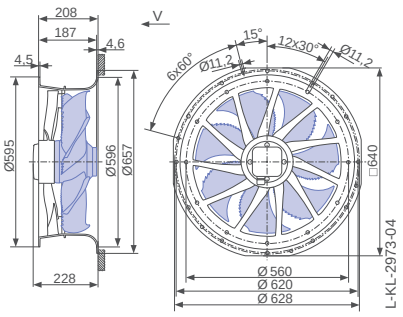

Design L - ZAplus Ontop, guard grille pressure side

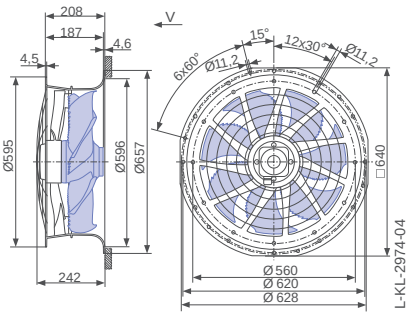

Performance data

Type	Connection	Characteristic curve	Voltage U V	Operating point	Current I A	Input power P_1 W	Speed n min^{-1}	Suction side sound power level L_{WA5} dB(A)
ZN050-SD_.4F.V7P1	Δ	I	400	①	0.78	340	830	
			400*	②	**0.68***	**280***	**880***	69
			400	③	0.58	210	920	67
	Y	II	400	④	0.36	150	510	
			400*	⑤	**0.34***	**150***	**590***	60
			400	⑥	0.31	130	700	60

*rated data

Fan ordering information

Airflow direction		Airflow direction			
Design	L (guard grille suction side) Ontop	L (without guard grille) Ontop	L (guard grille pressure side) Ontop	Q (guard grille pressure side)	H (guard grille pressure side) Flattop
	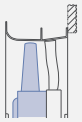		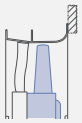	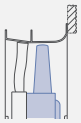	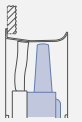
Type **Article no.**	**ZN050-SDL.4F.V7P1** **165328**	**ZN050-SDL.4F.V7P1** **161780**	**ZN050-SDL.4F.V7P1** **161781**	**ZN050-SDQ.4F.V7P1** **161785**	**ZN050-SDH.4F.V7P1** **161787**
Weight kg	14.70	13.40	14.50	15.80	13.90

ZAplus attachable on both sides.

Control technology

Frequency inverters Fcontrol 3~	Motor protection units 3~	Electronic voltage controllers 3~
		
Page 480	Page 518	Page 506

Design Q - ZAplus with adapter plate, guard grille pressure side

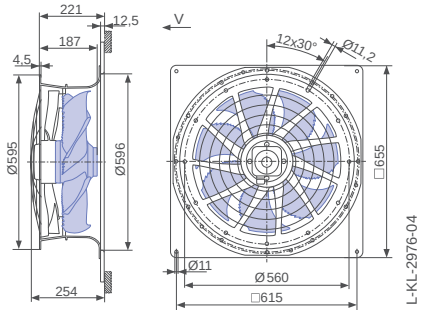

Design H - ZAplus Flattop, guard grille pressure side

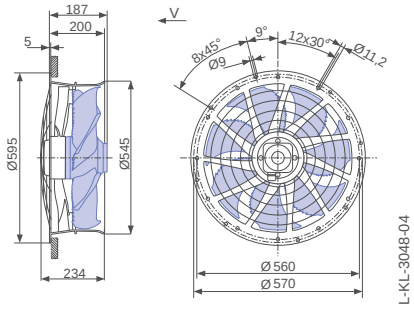

FE2owlet with ZAplus

for three phase alternating current, 8-8 pole

ZN050-AD



Description

Motor technology: AC
Rated voltage U_N: **3~ 400 V (Δ/Y) ±10 %***
Rated frequency f_N: **50 Hz*** (60Hz data available)
Input power P_1: **130/80 W***
Rated current I_N: **0.31/0.155 A***
Rated speed n_N: **670/530 min^{-1}***
Starting current I_A: 0.80 / 0.26 A
Current increase ΔI: 0 %
Thermal class: **THCL155***
Min. permitted ambient temperature $t_{R(min)}$: -40 °C
Max. permitted ambient temperature $t_{R(max)}$: 70 °C
Electrical connection: Terminal box
Number of blades: 7
Protection class: IP54
Motor protection: thermal contact
Blades: Aluminium, uncoated
Rotor: Aluminium, uncoated
Conformity: ErP 2015, CE
ErP-data
Efficiency η_{statA}: 30.6 %
Efficiency: N_{actual} = 42.5 / N_{target} = 40**
* Rated data
**ErP 2015

Characteristic curve

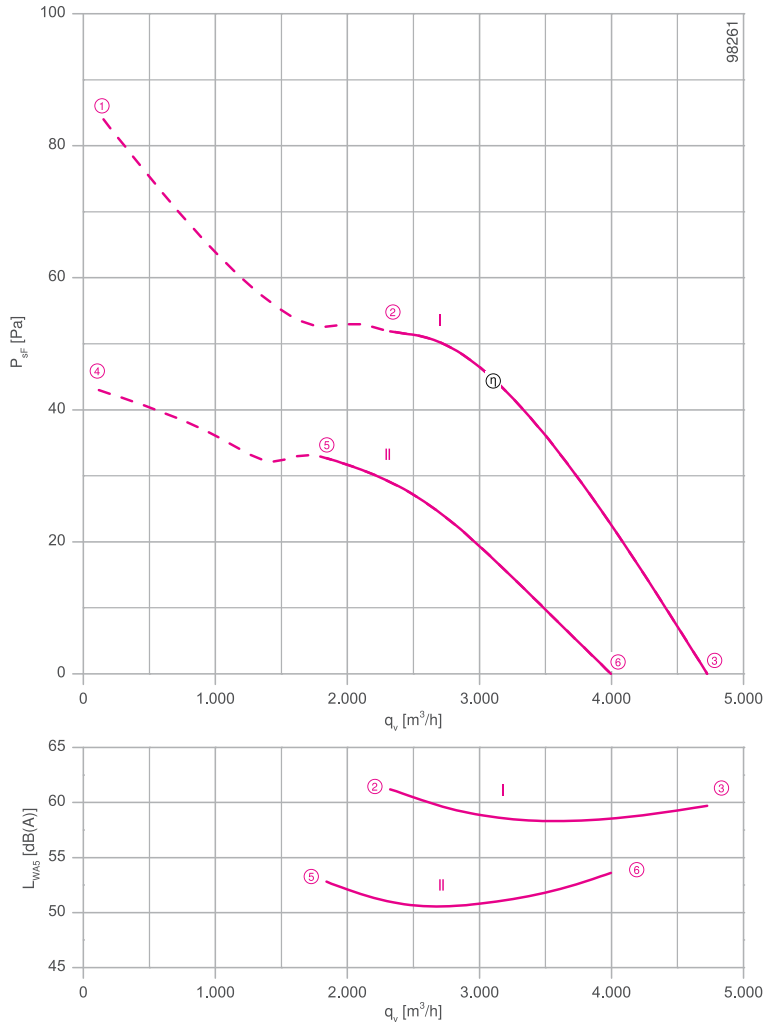

Measured in ZAplus without guard grille in installation type A according to ISO 5801

Connection diagram Page 531
1360-108XA

System components Page 430

Dimensions mm

Airflow direction

Design L - ZAplus Ontop, guard grille suction side

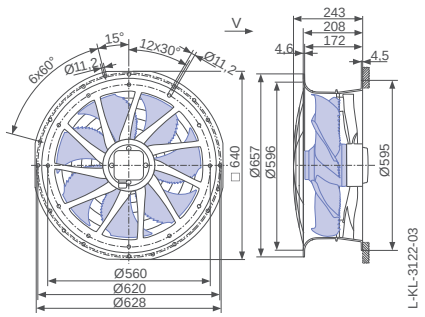

Airflow direction

Design L - ZAplus Ontop without guard grille

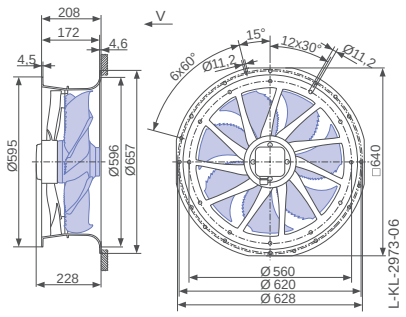

Design L - ZAplus Ontop, guard grille pressure side

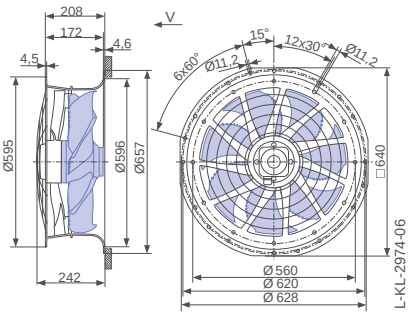

Performance data

Type	Connection	Characteristic curve	Voltage U V	Operating point	Current I A	Input power P_1 W	Speed n min^{-1}	Suction side sound power level L_{WA5} dB(A)
ZN050-AD_.4C.V7P1	Δ	I	400	①	0.34	160	640	
			400*	②	**0.31***	**130***	**670***	61
			400	③	0.30	110	700	60
	Y	II	400	④	0.17	95	460	
			400*	⑤	**0.15***	**85***	**530***	53
			400	⑥	0.13	70	590	54

*rated data

Fan ordering information

Airflow direction		Airflow direction			
Design	L (guard grille suction side) Ontop	L (without guard grille) Ontop	L (guard grille pressure side) Ontop	Q (guard grille pressure side)	H (guard grille pressure side) Flattop
	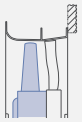		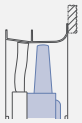	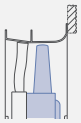	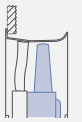
Type **Article no.**	**ZN050-ADL.4C.V7P1** **165329**	**ZN050-ADL.4C.V7P1** **161796**	**ZN050-ADL.4C.V7P1** **161797**	**ZN050-ADQ.4C.V7P1** **161801**	**ZN050-ADH.4C.V7P1** **161803**
Weight kg	13.00	11.70	12.80	14.10	12.20

ZAplus attachable on both sides.

Control technology

Frequency inverters Fcontrol 3~	Motor protection units 3~	Electronic voltage controllers 3~
		
Page 480	Page 518	Page 506

Design Q - ZAplus with adapter plate, guard grille pressure side

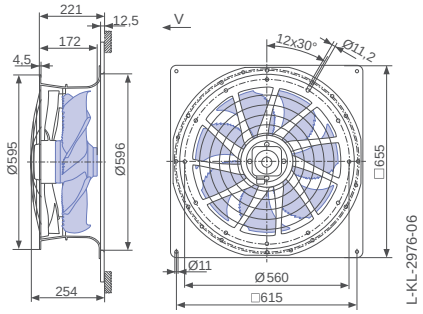

Design H - ZAplus Flattop, guard grille pressure side

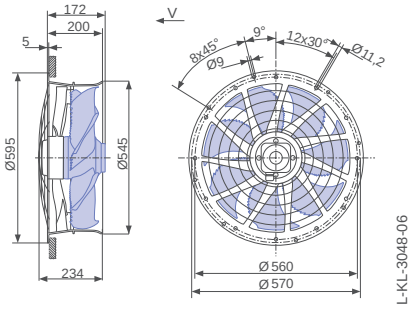

FE2owlet with ZAplus

for single phase alternating current, 6 pole

ZN063-6E



Characteristic curve

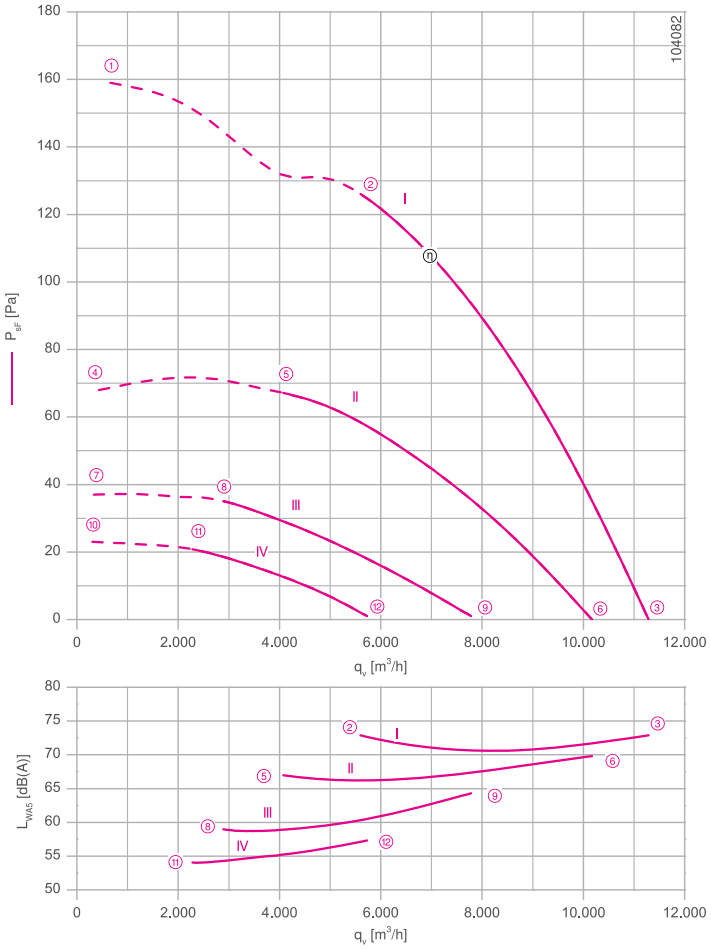

Measured in ZAplus without guard grille in installation type A according to ISO 5801

Description

Motor technology: AC
Rated voltage U_N: **1~ 230 V±10 %***
Rated frequency f_N: **50 Hz***
Input power P_1: **0.64 kW***
Rated current I_N: **2.90 A***
Rated speed n_N: **860 min^{-1}***
Starting current I_A: 5.50 A
Current increase ΔI: 5 %
Service capacitor C_{400V}: 12.0 µF
Thermal class: **THCL155***
Min. permitted ambient temperature $t_{R(min)}$: -25 °C
Max. permitted ambient temperature $t_{R(max)}$: 70 °C
Electrical connection: Terminal box
Number of blades: 7
Protection class: IP54
Motor protection: thermal contact
Blades: Aluminium, uncoated
Rotor: Aluminium, uncoated
Conformity: ErP 2015, CE
ErP-data
Efficiency η_{statA}: 35.5 %
Efficiency: N_{actual} = 43.2 / N_{target} = 40**
* Rated data
**ErP 2015

Connection diagram Page 531
1360-104XA

System components Page 430

Dimensions mm

Airflow direction

Design L - ZAplus Ontop, guard grille suction side

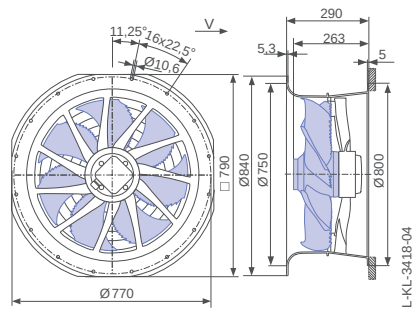

Airflow direction

Design L - ZAplus Ontop without guard grille

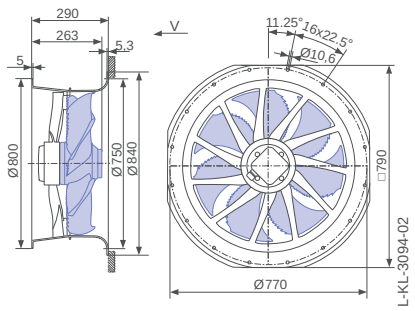

Design L - ZAplus Ontop, guard grille pressure side

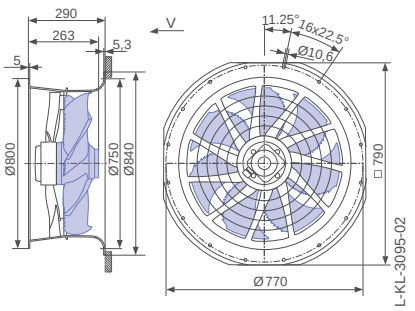

Performance data

Type	Characteristic curve	Voltage U V	Operating point	Current I A	Input power P_1 W	Speed n min^{-1}	Suction side sound power level L_{WA5} dB(A)
ZN063-6E_.4I.V7P1	I	230	①	3.60	760	750	
		230*	②	**2.90***	**620***	**860***	73
		230	③	2.10	460	930	73
	II	170	④	3.10	460	490	
		170	⑤	2.90	440	630	67
		170	⑥	2.20	360	850	70
	III	135	⑦	2.50	290	360	
		135	⑧	2.40	290	460	59
		135	⑨	2.20	270	650	64
	IV	110	⑩	2.10	200	290	
		110	⑪	2.10	200	350	54
		110	⑫	2.00	190	480	57

*rated data

Fan ordering information

Airflow direction → Airflow direction

Design	L (guard grille suction side) Ontop	L (without guard grille) Ontop	L (guard grille pressure side) Ontop	Q (without guard grille)	Q (guard grille pressure side)	H (guard grille pressure side) Flattop
	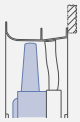		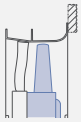		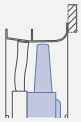	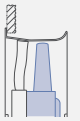
Type	**ZN063-6EL.4I.V7P1**	**ZN063-6EL.4I.V7P1**	**ZN063-6EL.4I.V7P1**	**ZN063-6EQ.4I.V7P1**	**ZN063-6EQ.4I.V7P1**	**ZN063-6EH.4I.V7P1**
Article no.	**169883**	**164366**	**164367**	**164371**	**164372**	**164376**
Weight kg	20.40	18.50	19.60	20.60	21.60	18.70
ZAplus attachable on both sides.						

Control technology

Frequency inverters Fcontrol 1~	Motor protection units 1~	Electronic voltage controllers 1~
		
Page 474	Page 518	Page 492

Design Q - ZAplus with adapter plate, without guard grille

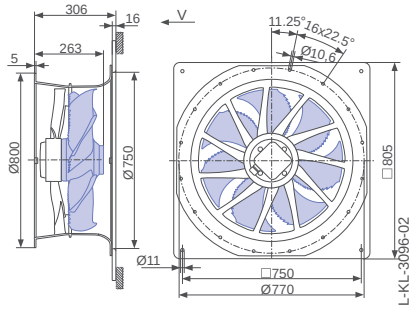

Design Q - ZAplus with adapter plate, guard grille pressure side

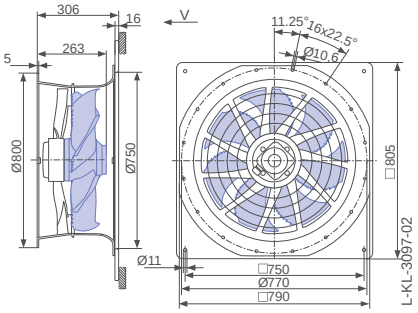

Design H - ZAplus Flattop, guard grille pressure side

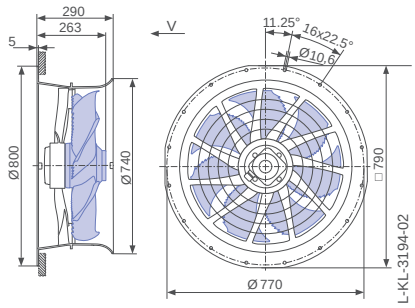

FE2owlet with ZAplus

for single phase alternating current, 6 pole

ZN063-6E



Characteristic curve

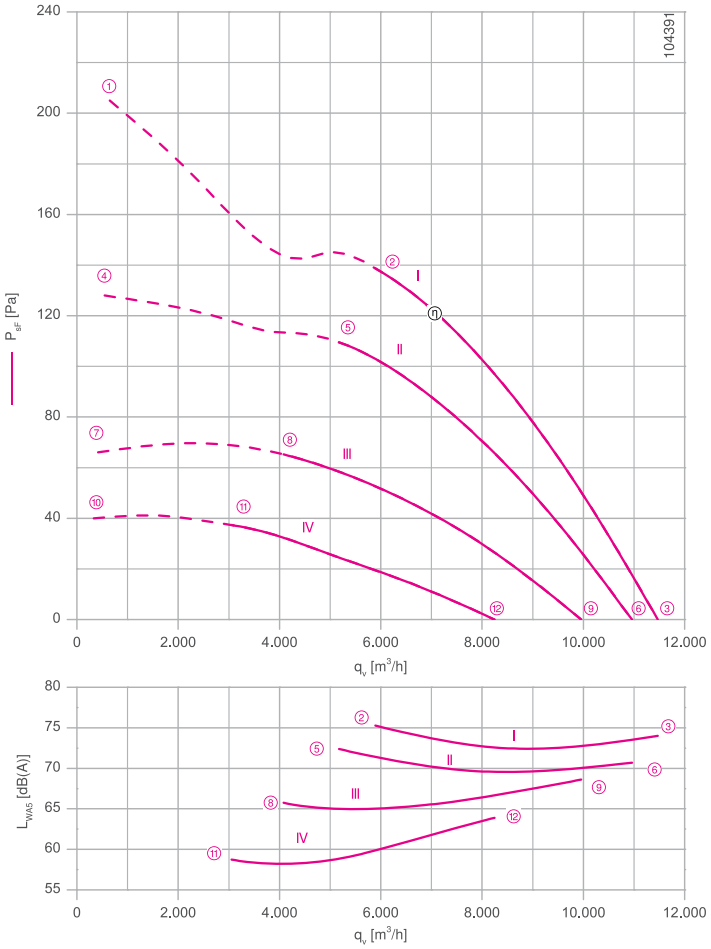

Measured in ZAplus without guard grille in installation type A according to ISO 5801

Description

Motor technology: AC
Rated voltage U_N: **1~ 230 V±10 %***
Rated frequency f_N: **50 Hz*** (60Hz data available)
Input power P_1: **0.70 kW***
Rated current I_N: **3.30 A***
Rated speed n_N: **920 min^{-1}***
Starting current I_A: 8.00 A
Current increase ΔI: 5 %
Service capacitor C_{400V}: 16.0 µF
Thermal class: **THCL155***
Min. permitted ambient temperature $t_{R(min)}$: -25 °C
Max. permitted ambient temperature $t_{R(max)}$: 70 °C
Electrical connection: Terminal box
Number of blades: 7
Protection class: IP54
Motor protection: thermal contact
Blades: Aluminium, uncoated
Rotor: Aluminium, uncoated
Conformity: ErP 2015, CE
ErP-data
Efficiency η_{statA}: 35.7 %
Efficiency: N_{actual} = 43.1 / N_{target} = 40**
* Rated data
**ErP 2015

Connection diagram Page 531
1360-104XA

System components Page 430

Dimensions mm

Airflow direction

Design L - ZAplus Ontop, guard grille suction side

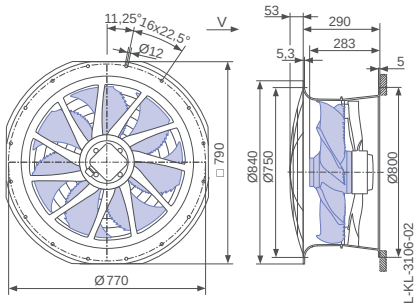

Airflow direction

Design L - ZAplus Ontop without guard grille

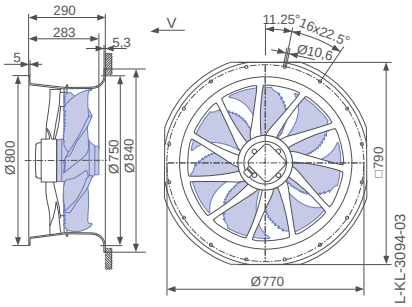

Design L - ZAplus Ontop, guard grille pressure side

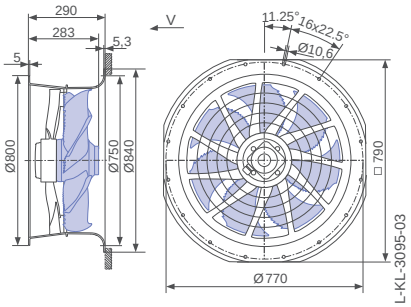

Performance data

Type	Characteristic curve	Voltage U V	Operating point	Current I A	Input power P_1 W	Speed n min^{-1}	Suction side sound power level L_{WA5} dB(A)
ZN063-6E_.4M.V7P1	I	230	①	4.00	860	870	
		230*	②	**3.20***	**700***	**920***	75
		230	③	2.60	540	950	74
	II	170	④	4.20	660	680	
		170	⑤	3.40	560	810	73
		170	⑥	2.40	390	910	71
	III	135	⑦	3.70	440	500	
		135	⑧	3.40	420	630	66
		135	⑨	2.50	330	830	69
	IV	110	⑩	3.10	310	380	
		110	⑪	3.00	300	480	59
		110	⑫	2.60	270	690	64

*rated data

Fan ordering information

Airflow direction | Airflow direction

Design	L (guard grille suction side) Ontop	L (without guard grille) Ontop	L (guard grille pressure side) Ontop	Q (without guard grille)	Q (guard grille pressure side)	H (guard grille pressure side) Flattop
	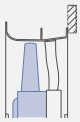		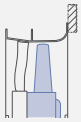		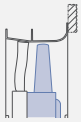	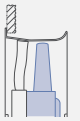
Type **Article no.**	**ZN063-6EL.4M.V7P1** **169884**	**ZN063-6EL.4M.V7P1** **164377**	**ZN063-6EL.4M.V7P1** **164378**	**ZN063-6EQ.4M.V7P1** **164382**	**ZN063-6EQ.4M.V7P1** **164383**	**ZN063-6EH.4M.V7P1** **164387**
Weight kg	22.70	20.70	21.80	22.70	23.80	21.80

ZAplus attachable on both sides.

Control technology

Frequency inverters Fcontrol 1~	Motor protection units 1~	Electronic voltage controllers 1~
		
Page 474	Page 518	Page 492

Design Q - ZAplus with adapter plate, without guard grille

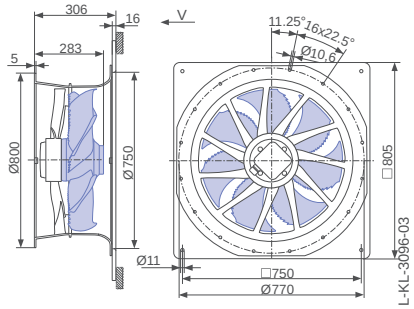

Design Q - ZAplus with adapter plate, guard grille pressure side

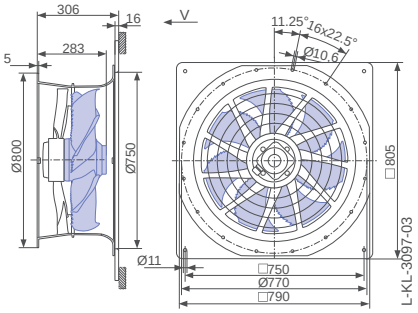

Design H - ZAplus Flattop, guard grille pressure side

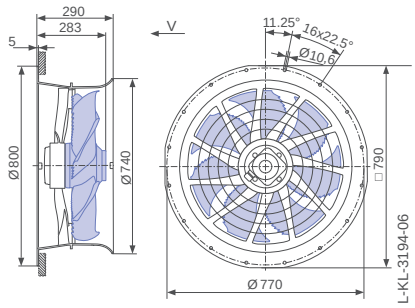

FE2owlet with ZAplus

for three phase alternating current, 4-4 pole

ZN063-VD



Characteristic curve

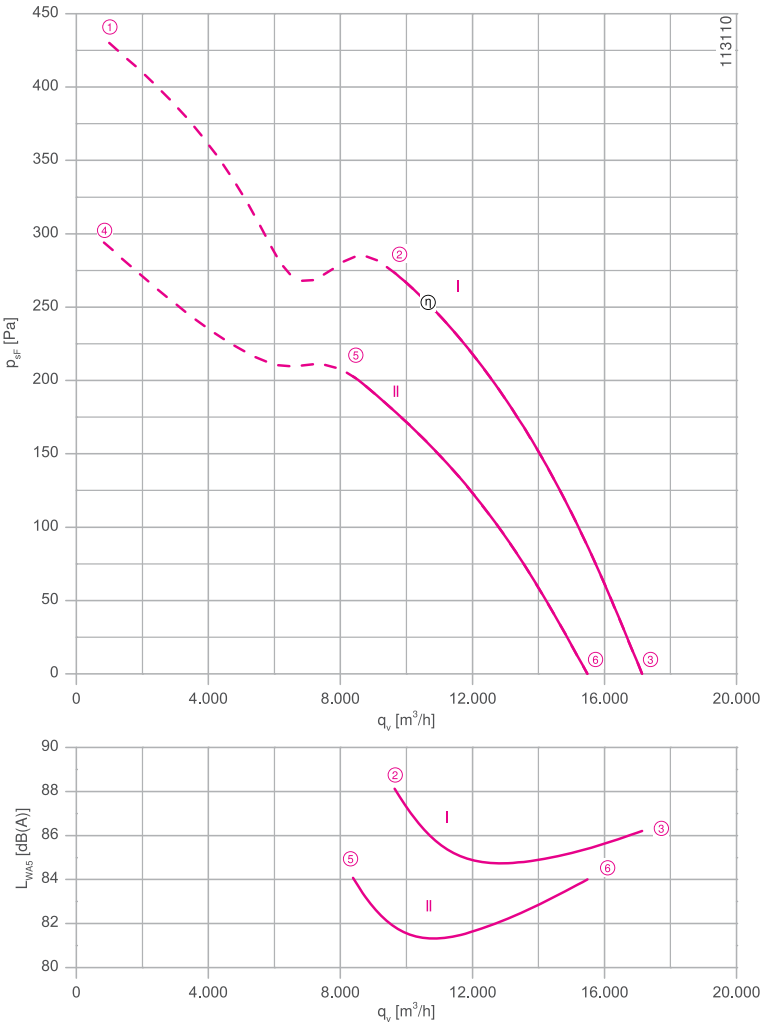

Measured in ZAplus without guard grille in installation type A according to ISO 5801

Description

Motor technology: AC
Rated voltage U_N: **3~ 400 V (Δ/Y) ±10 %***
Rated frequency f_N: **50 Hz*** (60Hz data available)
Input power P_1: **1.75/1.35 kW***
Rated current I_N: **3.70/2.20 A***
Rated speed n_N: **1400/1210 min^{-1}***
Starting current I_A: 20.00 / 6.50 A
Current increase ΔI: 5 %
Thermal class: **THCL155***
Min. permitted ambient temperature $t_{R(min)}$: -40 °C
Max. permitted ambient temperature $t_{R(max)}$: 70 °C
Electrical connection: Terminal box
Number of blades: 7
Protection class: IP54
Motor protection: thermal contact
Blades: Aluminium, uncoated
Rotor: Aluminium, uncoated
Conformity: ErP 2015, CE
ErP-data
Efficiency η_{statA}: 44.8 %
Efficiency: N_{actual} = 49.7 / N_{target} = 40**
* Rated data
**ErP 2015

Connection diagram	Seite 531 1360-108XA
System components	Seite 430

Dimensions mm

Airflow direction

Design L - ZAplus Ontop, guard grille suction side

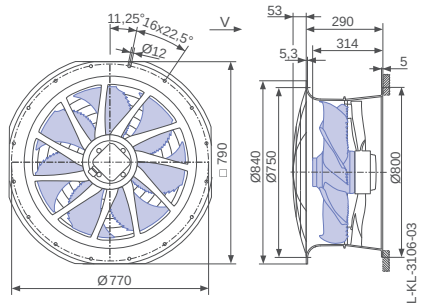

Airflow direction

Design L - ZAplus Ontop without guard grille

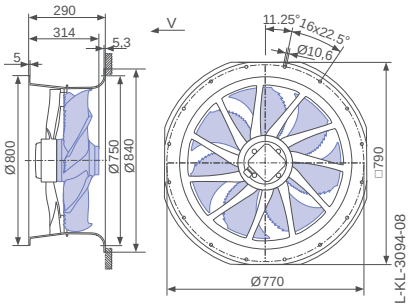

Design L - ZAplus Ontop, guard grille pressure side

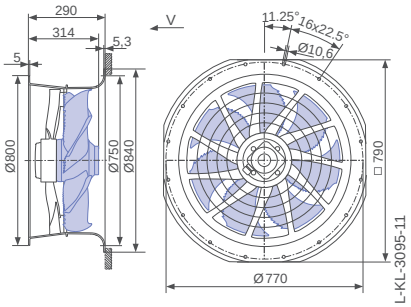

Performance data

Type	Connection	Characteristic curve	Voltage U V	Operating point	Current I A	Input power P_1 W	Speed n min^{-1}	Suction side sound power level L_{WA5} dB(A)
ZN063-VD_.6N.V7P6	Δ	I	400	①	4.20	2200	1370	
			400*	②	**3.70***	**1750***	**1400***	88
			400	③	3.10	1250	1440	86
	Y	II	400	④	2.60	1550	1130	
			400*	⑤	**2.20***	**1300***	**1210***	84
			400	⑥	1.75	1000	1300	84

*rated data

Fan ordering information

Airflow direction → Airflow direction

Design	L (guard grille suction side) Ontop	L (without guard grille) Ontop	L (guard grille pressure side) Ontop	Q (guard grille pressure side)	H (guard grille pressure side) Flattop
	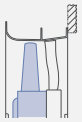		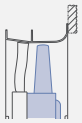	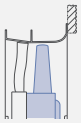	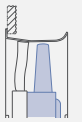
Type **Article no.**	**ZN063-VDL.6N.V7P6** **170238**	**ZN063-VDL.6N.V7P6** **169028**	**ZN063-VDL.6N.V7P6** **169025**	**ZN063-VDQ.6N.V7P6** **169024**	**ZN063-VDH.6N.V7P6** **169022**
Weight kg	32.30	30.30	31.30	33.40	30.70

ZAplus attachable on both sides.

Control technology

Frequency inverters Fcontrol 3~	Motor protection units 3~	Electronic voltage controllers 3~
		
Seite 480	Seite 518	Seite 506

Design Q - ZAplus with adapter plate, guard grille pressure side

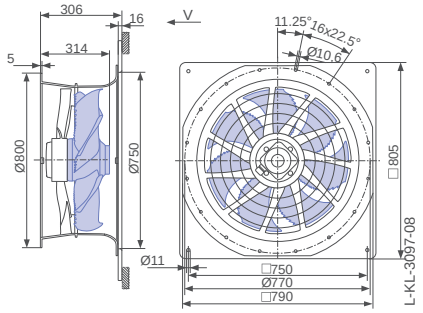

Design H - ZAplus Flattop, guard grille pressure side

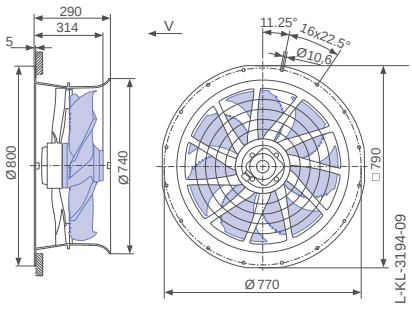

FE2owlet with ZAplus

for three phase alternating current, 4-4 pole

ZN063-VD



Description

Motor technology: AC
Rated voltage U_N: **3~ 400 V (Δ/Y) ±10 %***
Rated frequency f_N: **50 Hz***
Input power P_1: **2.70/1.75 kW***
Rated current I_N: **5.00/2.90 A***
Rated speed n_N: **1330/1040 min^{-1}***
Starting current I_A: 19.00 / 6.00 A
Current increase ΔI: 5 %
Thermal class: **THCL155***
Min. permitted ambient temperature $t_{R(min)}$: -40 °C
Max. permitted ambient temperature $t_{R(max)}$: 60 °C
Electrical connection: Terminal box
Number of blades: 7
Protection class: IP54
Motor protection: thermal contact
Blades: Aluminium, uncoated
Rotor: Aluminium, uncoated
Conformity: ErP 2015, CE
ErP-data
Efficiency η_{statA}: 43.1 %
Efficiency: N_{actual} = 46.8 / N_{target} = 40**
* Rated data
**ErP 2015

Characteristic curve

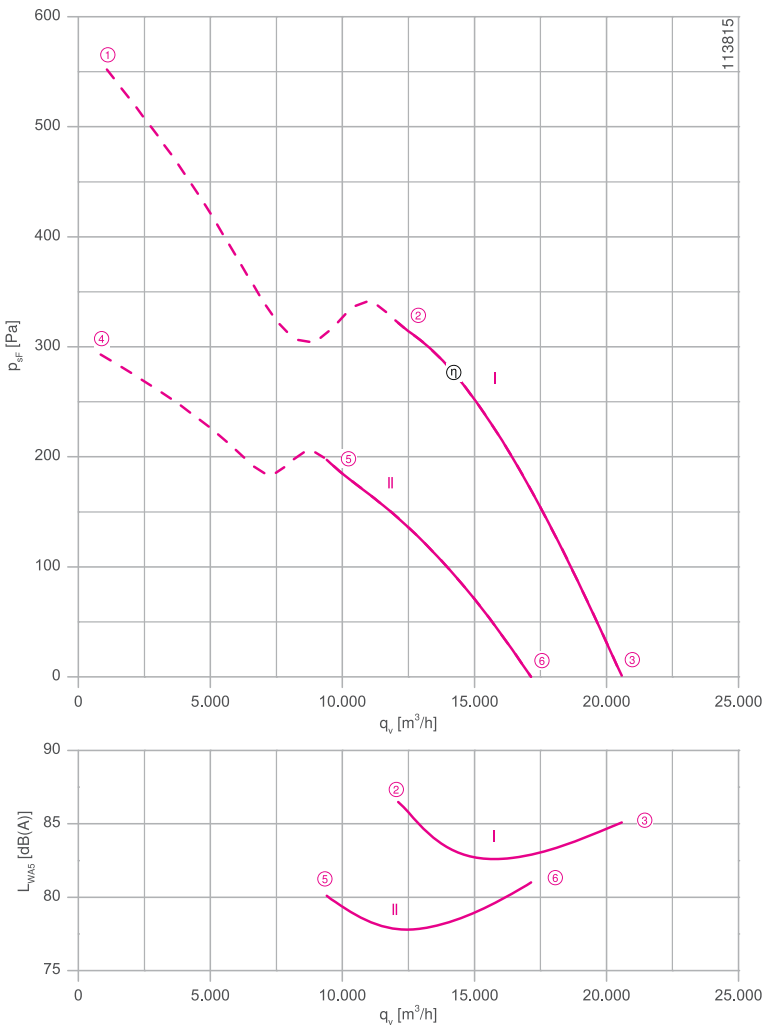

Measured in ZAplus without guard grille in installation type A according to ISO 5801

Connection diagram Page 531
1360-108XA

System components Page 430

Dimensions mm

Airflow direction

Design L - ZAplus Ontop, guard grille suction side

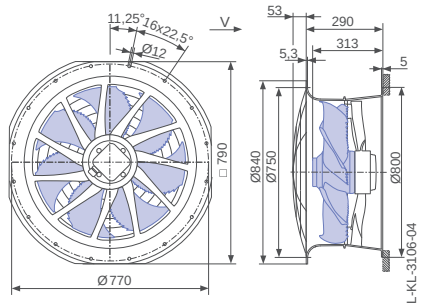

Airflow direction

Design L - ZAplus Ontop without guard grille

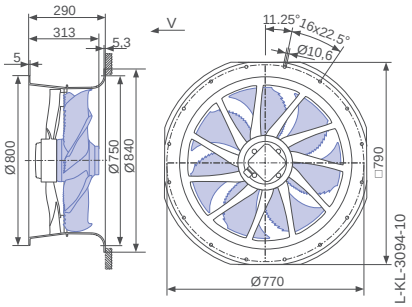

Design L - ZAplus Ontop, guard grille pressure side

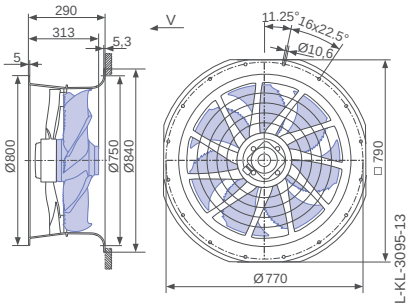

Performance data

Type	Connection	Characteristic curve	Voltage U V	Operating point	Current I A	Input power P_1 W	Speed n min^{-1}	Suction side sound power level L_{WA5} dB(A)
ZN063-VD_.6N._7P7	Δ	I	400	①	6.00	3400	1270	
			400*	②	**5.00***	**2700***	**1330***	87
			400	③	4.00	2000	1380	85
	Y	II	400	④	3.40	2000	920	
			400*	⑤	**2.90***	**1750***	**1040***	80
			400	⑥	2.50	1450	1150	81

*rated data

Fan ordering information

Airflow direction ◀▶ Airflow direction

Design	L (guard grille suction side) Ontop	L (without guard grille) Ontop	L (guard grille pressure side) Ontop	Q (without guard grille)	Q (guard grille pressure side)	H (guard grille pressure side) Flattop
	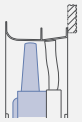		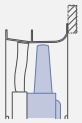	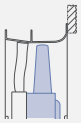		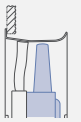
Type **Article no.**	**ZN063-VDL.6N.V7P7** **170239**	**ZN063-VDL.6N.V7P7** **169703**	**ZN063-VDL.6N.V7P7** **169704**	**ZN063-VDQ.6N.V7P7** **169705**	**ZN063-VDQ.6N.V7P7** **169706**	**ZN063-VDH.6N.V7P7** **169708**
Weight kg	35.30	33.30	34.30	35.30	36.40	33.70

ZAplus attachable on both sides.

Control technology

Frequency inverters Fcontrol 3~	Motor protection units 3~	Electronic voltage controllers 3~
		
Page 480	Page 518	Page 506

Design Q - ZAplus with adapter plate, without guard grille

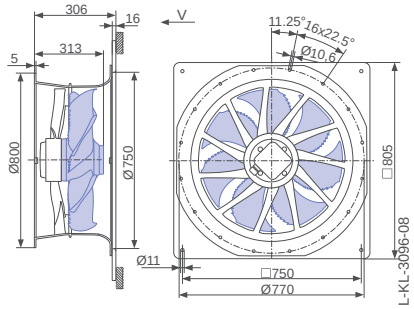

Design Q - ZAplus with adapter plate, guard grille pressure side

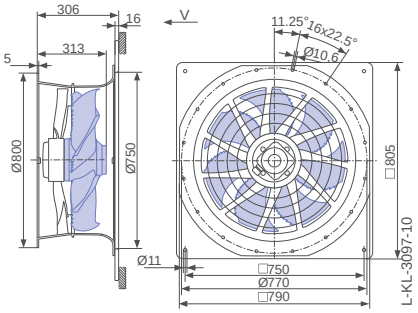

Design H - ZAplus Flattop, guard grille pressure side

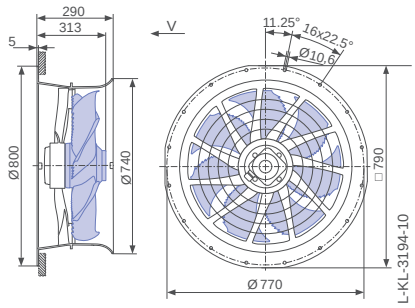

FE2owlet with ZAplus

for three phase alternating current, 6-6 pole

ZN063-SD



Description

Motor technology: AC
Rated voltage U_N: **3~ 400 V (Δ/Y) ±10 %***
Rated frequency f_N: **50 Hz*** (60Hz data available)
Input power P_1: **0.60/0.37 kW***
Rated current I_N: **1.30/0.70 A***
Rated speed n_N: **890/ 660 min^{-1}***
Starting current I_A: 4.40 / 1.40 A
Current increase ΔI: 0 %
Thermal class: **THCL155***
Min. permitted ambient temperature $t_{R(min)}$: -40 °C
Max. permitted ambient temperature $t_{R(max)}$: 70 °C
Electrical connection: Terminal box
Number of blades: 7
Protection class: IP54
Motor protection: thermal contact
Blades: Aluminium, uncoated
Rotor: Aluminium, uncoated
Conformity: ErP 2015, CE
ErP-data
Efficiency η_{statA}: 39.3 %
Efficiency: N_{actual} = 47.1 / N_{target} = 40**
* Rated data
**ErP 2015

Characteristic curve

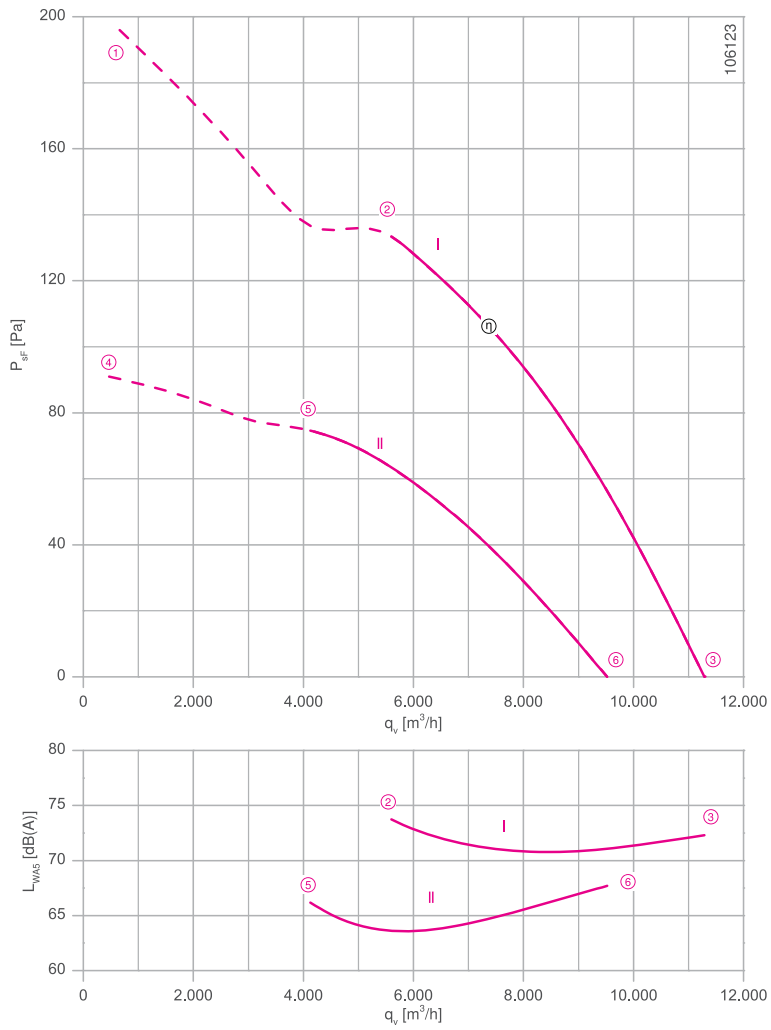

Measured in ZAplus without guard grille in installation type A according to ISO 5801

Connection diagram Page 531
1360-108XA

System components Page 430

Dimensions mm

Airflow direction

Design L - ZAplus Ontop, guard grille suction side

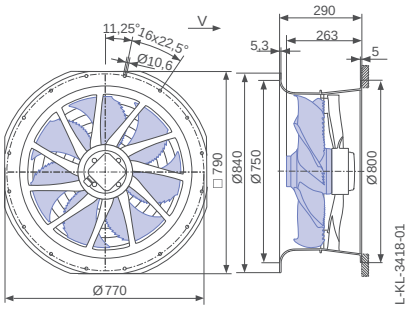

Airflow direction

Design L - ZAplus Ontop without guard grille

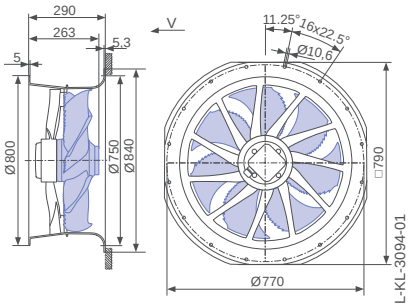

Design L - ZAplus Ontop, guard grille pressure side

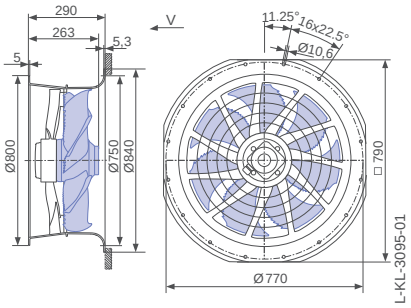

Performance data

Type	Connection	Characteristic curve	Voltage U V	Operating point	Current I A	Input power P_1 W	Speed n min^{-1}	Suction side sound power level L_{WA5} dB(A)
ZN063-SD_.4I.V7P1	Δ	I	400	①	1.50	780	840	
			400*	②	**1.30***	**600***	**890***	74
			400	③	1.10	400	930	72
	Y	II	400	④	0.78	420	570	
			400*	⑤	**0.70***	**370***	**670***	66
			400	⑥	0.54	290	790	68

*rated data

Fan ordering information

Airflow direction ⟷ Airflow direction

Design	L (guard grille suction side) Ontop	L (without guard grille) Ontop	L (guard grille pressure side) Ontop	Q (without guard grille)	Q (guard grille pressure side)	H (guard grille pressure side) Flattop
	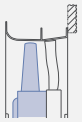		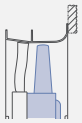	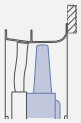		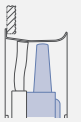
Type **Article no.**	**ZN063-SDL.4I.V7P1** **166783**	**ZN063-SDL.4I.V7P1** **164355**	**ZN063-SDL.4I.V7P1** **164356**	**ZN063-SDQ.4I.V7P1** **164360**	**ZN063-SDQ.4I.V7P1** **164361**	**ZN063-SDH.4I.V7P1** **164365**
Weight kg	20.40	18.50	19.60	20.60	21.60	18.70

ZAplus attachable on both sides.

Control technology

Frequency inverters Fcontrol 3~	Motor protection units 3~	Electronic voltage controllers 3~
		
Page 480	Page 518	Page 506

Design Q - ZAplus with adapter plate, without guard grille

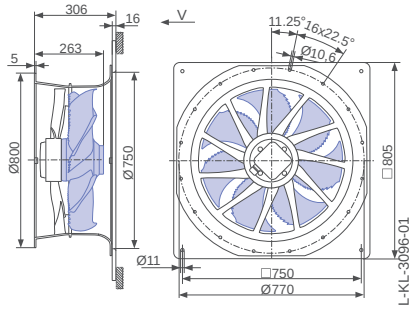

Design Q - ZAplus with adapter plate, guard grille pressure side

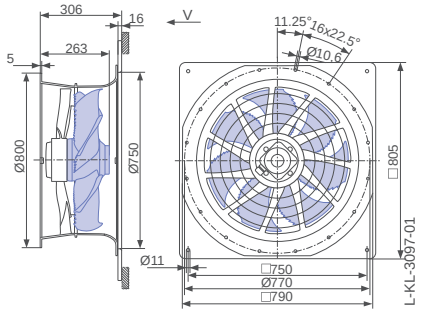

Design H - ZAplus Flattop, guard grille pressure side

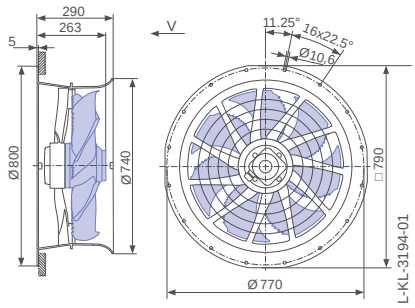

FE2owlet with ZAplus

for three phase alternating current, 8-8 pole

ZN063-AD



Description

Motor technology: AC
Rated voltage U_N: **3~ 400 V (Δ/Y) ±10 %***
Rated frequency f_N: **50 Hz*** (60Hz data available)
Input power P_1: **290/170 W***
Rated current I_N: **0.78/0.37 A***
Rated speed n_N: **660/ 490 min^{-1}***
Starting current I_A: 1.70 / 0.50 A
Current increase ΔI: 0 %
Thermal class: **THCL155***
Min. permitted ambient temperature $t_{R(min)}$: -40 °C
Max. permitted ambient temperature $t_{R(max)}$: 70 °C
Electrical connection: Terminal box
Number of blades: 7
Protection class: IP54
Motor protection: thermal contact
Blades: Aluminium, uncoated
Rotor: Aluminium, uncoated
Conformity: ErP 2015, CE
ErP-data
Efficiency η_{statA}: 33.6 %
Efficiency: N_{actual} = 43.5 / N_{target} = 40**
* Rated data
**ErP 2015

Characteristic curve

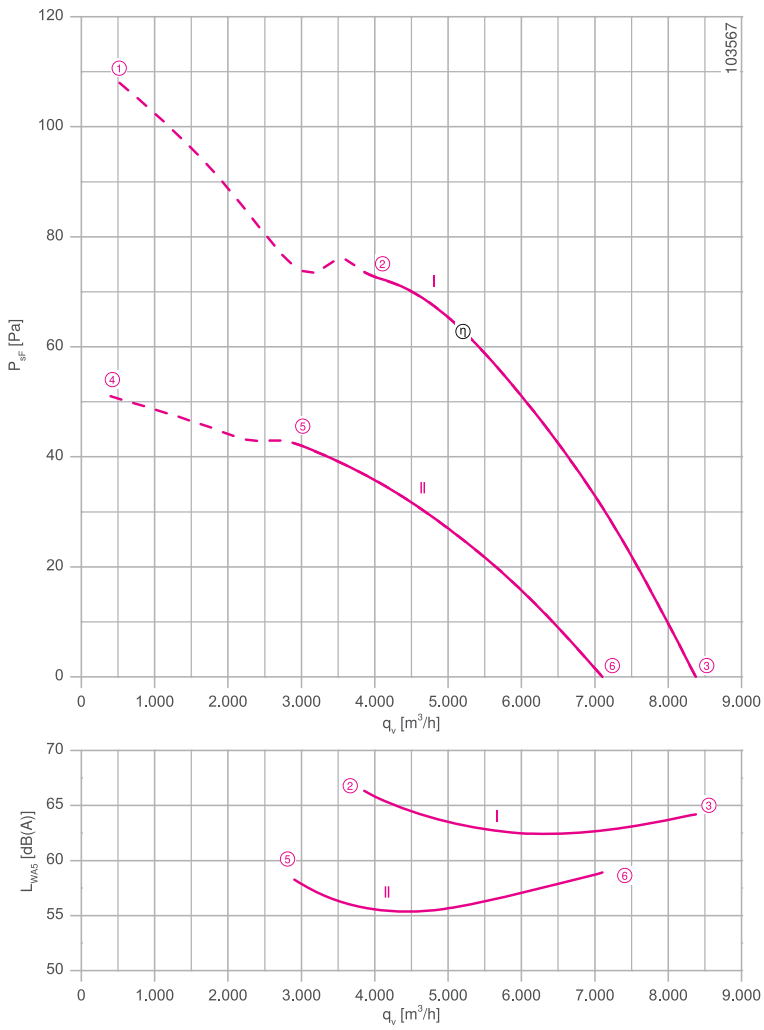

Measured in ZAplus without guard grille in installation type A according to ISO 5801

Connection diagram Page 531
1360-108XA

System components Page 430

Dimensions mm

Airflow direction

Design L - ZAplus Ontop, guard grille suction side

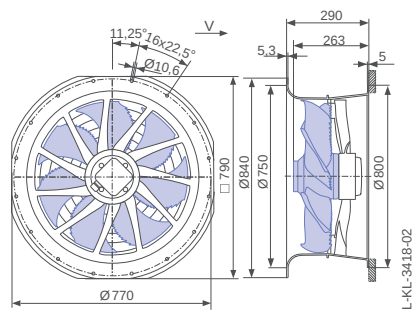

Airflow direction

Design L - ZAplus Ontop without guard grille

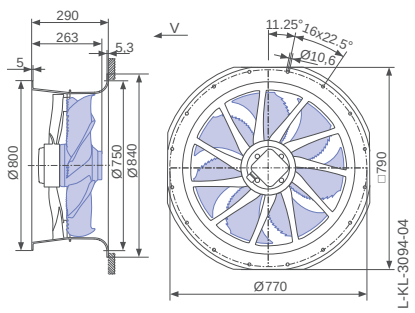

Design L - ZAplus Ontop, guard grille pressure side

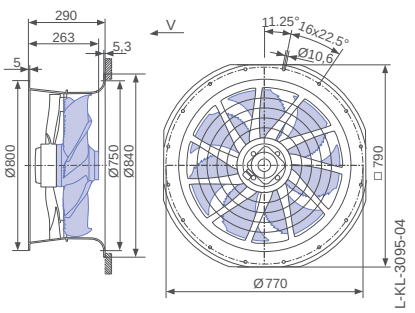

Performance data

Type	Connection	Characteristic curve	Voltage U V	Operating point	Current I A	Input power P_1 W	Speed n min^{-1}	Suction side sound power level L_{WA5} dB(A)
ZN063-AD_.4I.V7P1	Δ	I	400	①	0.88	360	620	
			400*	②	**0.78***	**290***	**660***	67
			400	③	0.72	210	690	64
	Y	II	400	④	0.40	180	430	
			400*	⑤	**0.37***	**170***	**490***	58
			400	⑥	0.31	130	590	59

*rated data

Fan ordering information

Airflow direction ◀▶ Airflow direction

Design	L (guard grille suction side) Ontop	L (without guard grille) Ontop	L (guard grille pressure side) Ontop	Q (without guard grille)	Q (guard grille pressure side)	H (guard grille pressure side) Flattop
	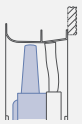		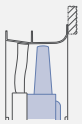		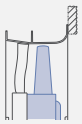	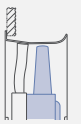
Type **Article no.**	**ZN063-ADL.4I.V7P1** **166784**	**ZN063-ADL.4I.V7P1** **164388**	**ZN063-ADL.4I.V7P1** **164389**	**ZN063-ADQ.4I.V7P1** **164393**	**ZN063-ADQ.4I.V7P1** **164394**	**ZN063-ADH.4I.V7P1** **164398**
Weight kg	20.40	18.50	19.60	20.60	21.60	18.70

ZAplus attachable on both sides.

Control technology

Frequency inverters Fcontrol 3~	Motor protection units 3~	Electronic voltage controllers 3~
		
Page 480	Page 518	Page 506

Design Q - ZAplus with adapter plate, without guard grille

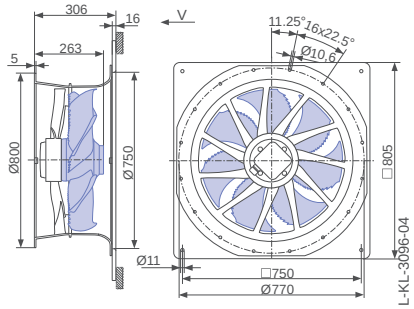

Design Q - ZAplus with adapter plate, guard grille pressure side

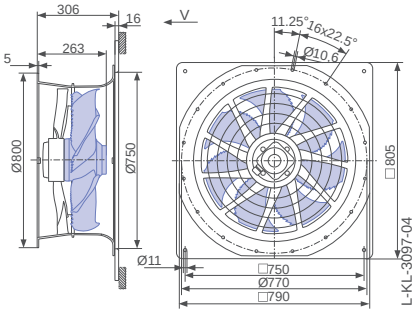

Design H - ZAplus Flattop, guard grille pressure side

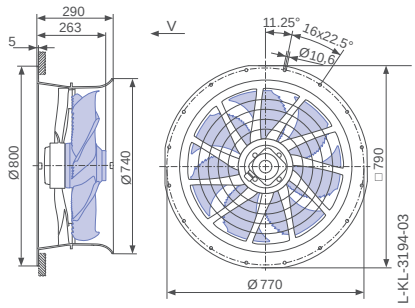

FE2owlet with ZAplus

for three phase alternating current, 12-12 pole

ZN063-ND



Description

Motor technology: AC
Rated voltage U_N: **3~ 400 V (Δ/Y) ±10 %***
Rated frequency f_N: **50 Hz*** (60Hz data available)
Input power P_1: **120/65 W***
Rated current I_N: **0.31/0.13 A***
Rated speed n_N: **440/ 340 min^{-1}***
Current increase ΔI: 0 %
Thermal class: **THCL155***
Min. permitted ambient temperature $t_{R(min)}$: -40 °C
Max. permitted ambient temperature $t_{R(max)}$: 70 °C
Electrical connection: Terminal box
Number of blades: 7
Protection class: IP54
Motor protection: thermal contact
Blades: Aluminium, uncoated
Rotor: Aluminium, uncoated
Conformity: CE
ErP-data
Not subject to the regulations of ErP directive (P_1< 125 W)
* Rated data

Characteristic curve

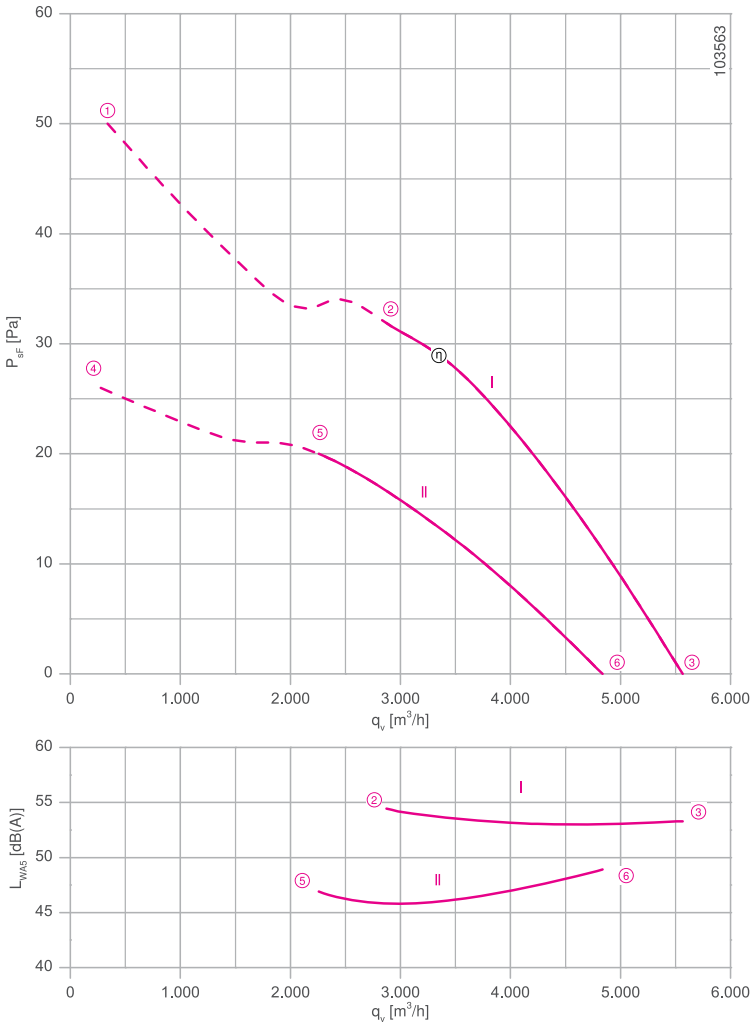

Measured in ZAplus without guard grille in installation type A according to ISO 5801

Connection diagram Page 531
1360-108XA

System components Page 430

Dimensions mm

Airflow direction

Design L - ZAplus Ontop, guard grille suction side

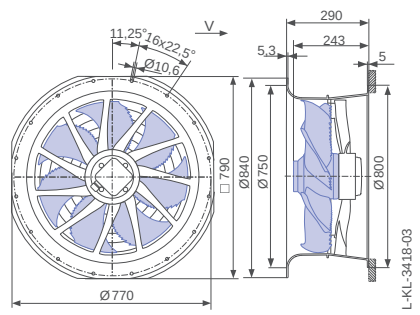

Airflow direction

Design L - ZAplus Ontop without guard grille

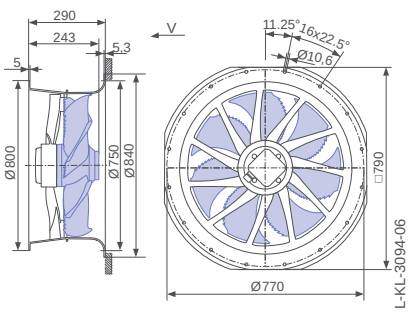

Design L - ZAplus Ontop, guard grille pressure side

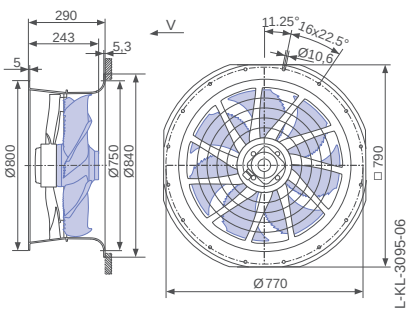

Performance data

Type	Connection	Characteristic curve	Voltage U V	Operating point	Current I A	Input power P_1 W	Speed n min^{-1}	Suction side sound power level L_{WA5} dB(A)
ZN063-ND_.4F.V7P1	Δ	I	400	①	0.32	140	420	
			400*	②	**0.31***	**120***	**440***	55
			400	③	0.29	95	460	53
	Y	II	400	④	0.14	70	300	
			400*	⑤	**0.13***	**65***	**350***	47
			400	⑥	0.11	50	400	49

*rated data

Fan ordering information

Airflow direction ◀ ▶ Airflow direction

Design	L (guard grille suction side) Ontop	L (without guard grille) Ontop	L (guard grille pressure side) Ontop	Q (without guard grille)	Q (guard grille pressure side)	H (guard grille pressure side) Flattop
	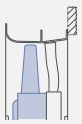		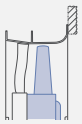		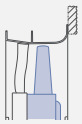	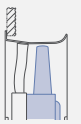
Type **Article no.**	**ZN063-NDL.4F.V7P1** **166785**	**ZN063-NDL.4F.V7P1** **164410**	**ZN063-NDL.4F.V7P1** **164411**	**ZN063-NDQ.4F.V7P1** **164415**	**ZN063-NDQ.4F.V7P1** **164416**	**ZN063-NDH.4F.V7P1** **164420**
Weight kg	18.80	16.90	18.00	19.00	20.00	17.10

ZAplus attachable on both sides.

Control technology

Frequency inverters Fcontrol 3~	Motor protection units 3~	Electronic voltage controllers 3~
		
Page 480	Page 518	Page 506

Design Q - ZAplus with adapter plate, without guard grille

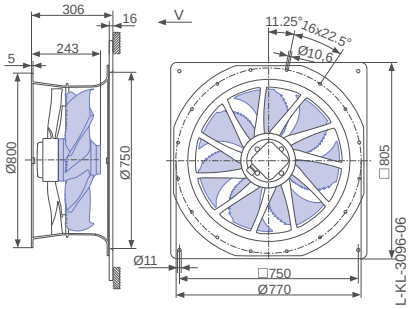

Design Q - ZAplus with adapter plate, guard grille pressure side

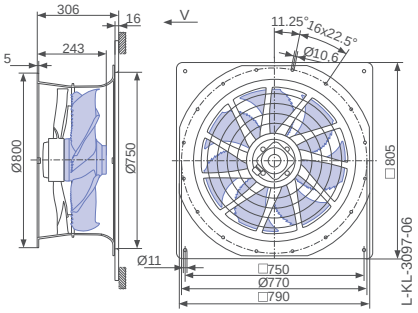

Design H - ZAplus Flattop, guard grille pressure side

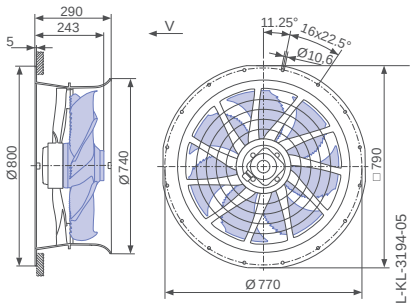

FE2owlet with ZAplus

for three phase alternating current, 4-4 pole

ZN071-VD



Description

Motor technology: AC
Rated voltage U_N: **3~ 400 V (Δ/Y) ±10 %***
Rated frequency f_N: **50 Hz***
Input power P_1: **2.60/1.80 kW***
Rated current I_N: **4.80/3.00 A***
Rated speed n_N: **1340/1060 min^{-1}***
Starting current I_A: 20.00 / 6.50 A
Current increase ΔI: 5 %
Thermal class: **THCL155***
Min. permitted ambient temperature $t_{R(min)}$: -40 °C
Max. permitted ambient temperature $t_{R(max)}$: 60 °C
Electrical connection: Terminal box
Number of blades: 7
Protection class: IP54
Motor protection: thermal contact
Blades: Aluminium, uncoated
Rotor: Aluminium, uncoated
Conformity: ErP 2015, CE
ErP-data
Efficiency η_{statA}: 44.7 %
Efficiency: N_{actual} = 48.4 / N_{target} = 40**
* Rated data
**ErP 2015

Characteristic curve

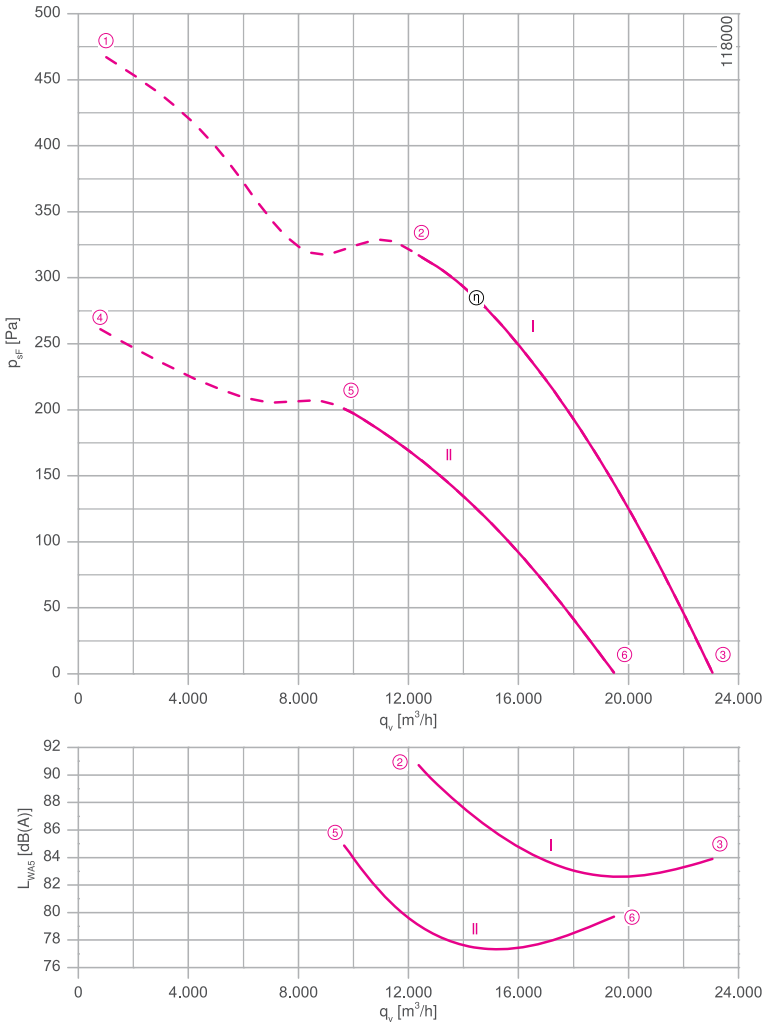

Measured in ZAplus without guard grille in installation type A according to ISO 5801

Connection diagram Page 531
1360-108XA

System components Page 430

Dimensions mm

Airflow direction

Design L - ZAplus Ontop, guard grille suction side

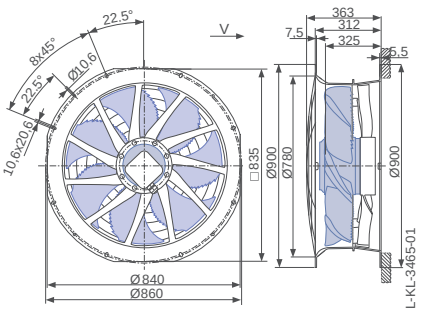

Airflow direction

Design L - ZAplus Ontop without guard grille

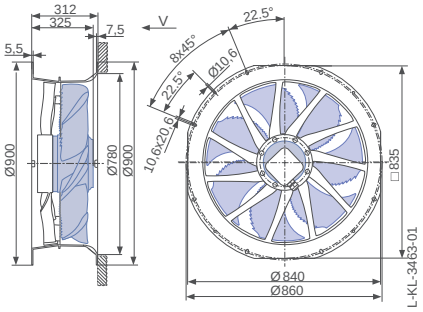

Design L - ZAplus Ontop, guard grille pressure side

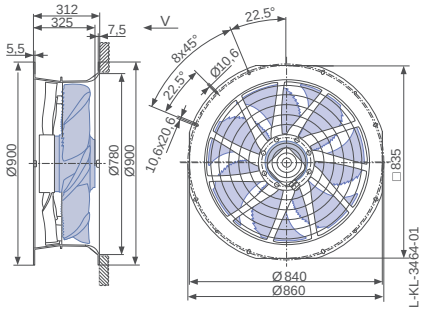

Performance data

Type	Connection	Characteristic curve	Voltage U V	Operating point	Current I A	Input power P_1 W	Speed n min^{-1}	Suction side sound power level L_{WA5} dB(A)
ZN071-VD_.6N._7P2	Δ	I	400	①	5.80	3300	1290	
			400*	②	**4.80***	**2600***	**1340***	91
			400	③	3.90	1900	1390	84
	Y	II	400	④	3.40	2100	950	
			400*	⑤	**2.90***	**1800***	**1060***	85
			400	⑥	2.40	1450	1180	80

*rated data

Fan ordering information

Airflow direction	Airflow direction				
Design	L (guard grille suction side) Ontop	L (without guard grille) Ontop	L (guard grille pressure side) Ontop	H (without guard grille) Flattop	H (guard grille pressure side) Flattop
	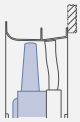		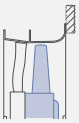		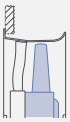
Type **Article no.**	**ZN071-VDL.6N.V7P2** **170443**	**ZN071-VDL.6N.V7P2** **170353**	**ZN071-VDL.6N.V7P2** **170354**	**ZN071-VDH.6N.V7P2** **170441**	**ZN071-VDH.6N.V7P2** **170442**
Weight kg	34.40	31.80	33.00	30.90	32.10

ZAplus attachable on both sides.

Control technology

Frequency inverters Fcontrol 3~	Motor protection units 3~	Electronic voltage controllers 3~
		
Page 480	Page 518	Page 506

Design H - ZAplus Flattop, without guard grille

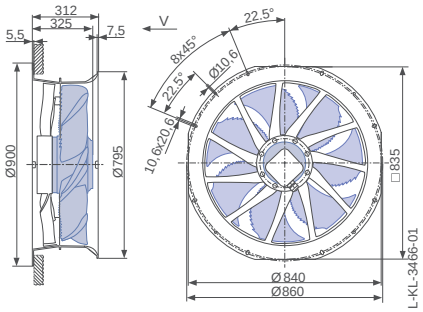

Design H - ZAplus Flattop, guard grille pressure side

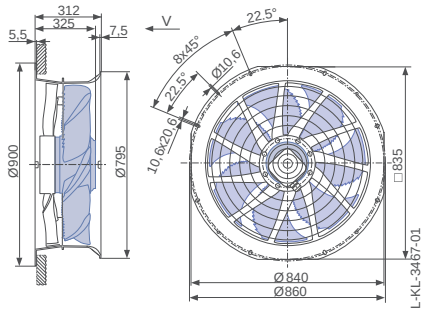

FE2owlet with ZAplus

for three phase alternating current, 6-6 pole

ZN071-SD



Characteristic curve

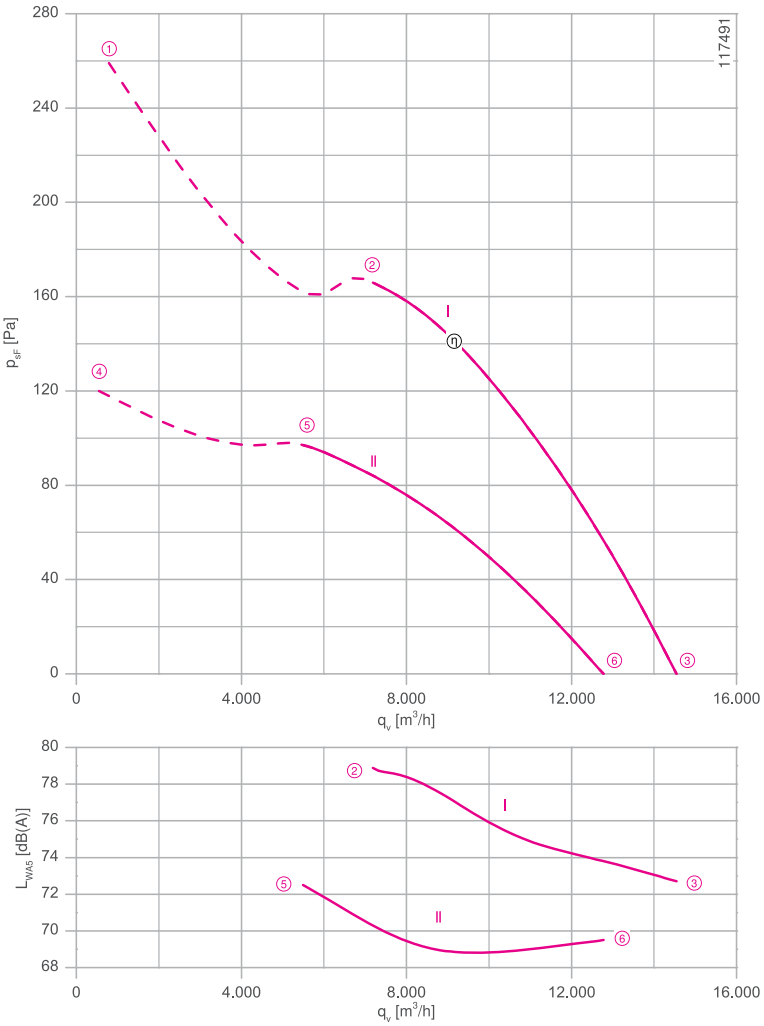

Measured in ZAplus without guard grille in installation type A according to ISO 5801

Description

Motor technology: AC
Rated voltage U_N: **3~ 400 V (Δ/Y) ±10 %***
Rated frequency f_N: **50 Hz***
Input power P_1: **0.88/0.62 kW***
Rated current I_N: **1.65/1.10 A***
Rated speed n_N: **900/ 690 min^{-1}***
Starting current I_A: 6.00 / 1.80 A
Current increase ΔI: 10 %
Thermal class: **THCL155***
Min. permitted ambient temperature $t_{R(min)}$: -40 °C
Max. permitted ambient temperature $t_{R(max)}$: 70 °C
Electrical connection: Terminal box
Number of blades: 7
Protection class: IP54
Motor protection: thermal contact
Blades: Aluminium, uncoated
Rotor: Aluminium, uncoated
Conformity: ErP 2015, CE
ErP-data
Efficiency η_{statA}: 43.8 %
Efficiency: N_{actual} = 50.6 / N_{target} = 40**
* Rated data
**ErP 2015

Connection diagram Page 531
1360-108XA

System components Page 430

Dimensions mm

Airflow direction

Design L - ZAplus Ontop, guard grille suction side

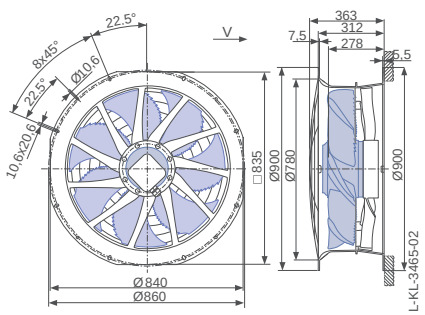

Airflow direction

Design L - ZAplus Ontop without guard grille

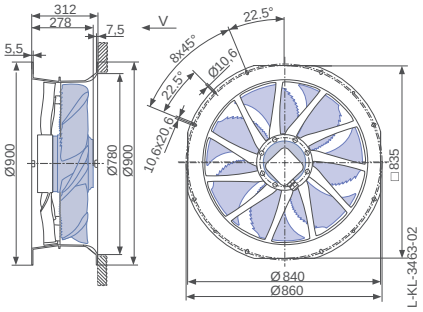

Design L - ZAplus Ontop, guard grille pressure side

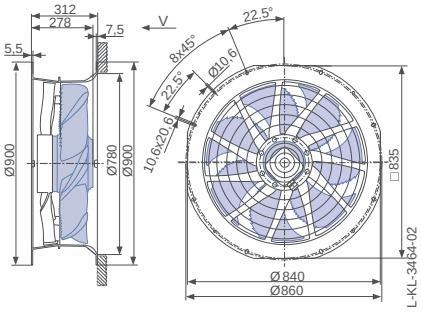

Performance data

Type	Connection	Characteristic curve	Voltage U V	Operating point	Current I A	Input power P_1 W	Speed n min^{-1}	Suction side sound power level L_{WA5} dB(A)
ZN071-SD_.6F._7P1	Δ	I	400	①	2.10	1200	850	
			400*	②	**1.65***	**880***	**900***	79
			400	③	1.30	540	950	73
	Y	II	400	④	1.25	720	570	
			400*	⑤	**1.05***	**620***	**690***	73
			400	⑥	0.74	440	830	70

*rated data

Fan ordering information

Airflow direction → Airflow direction

Design	L (guard grille suction side) Ontop	L (without guard grille) Ontop	L (guard grille pressure side) Ontop	H (without guard grille) Flattop	H (guard grille pressure side) Flattop
	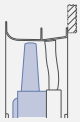		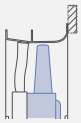		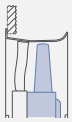
Type **Article no.**	**ZN071-SDL.6F.V7P1** **170447**	**ZN071-SDL.6F.V7P1** **170355**	**ZN071-SDL.6F.V7P1** **170356**	**ZN071-SDH.6F.V7P1** **170445**	**ZN071-SDH.6F.V7P1** **170446**
Weight kg	28.90	26.40	27.50	25.40	26.60

ZAplus attachable on both sides.

Control technology

Frequency inverters Fcontrol 3~	Motor protection units 3~	Electronic voltage controllers 3~
		
Page 480	Page 518	Page 506

Design H - ZAplus Flattop, without guard grille

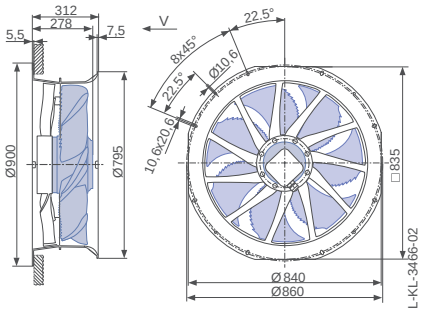

Design H - ZAplus Flattop, guard grille pressure side

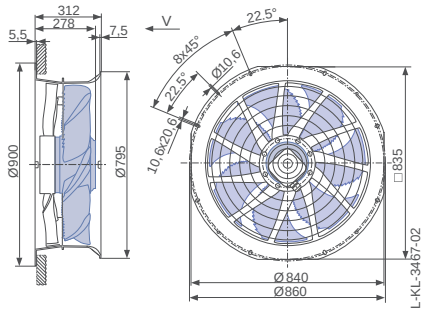

FE2owlet with ZAplus

for three phase alternating current, 6-6 pole

ZN071-SD



Characteristic curve

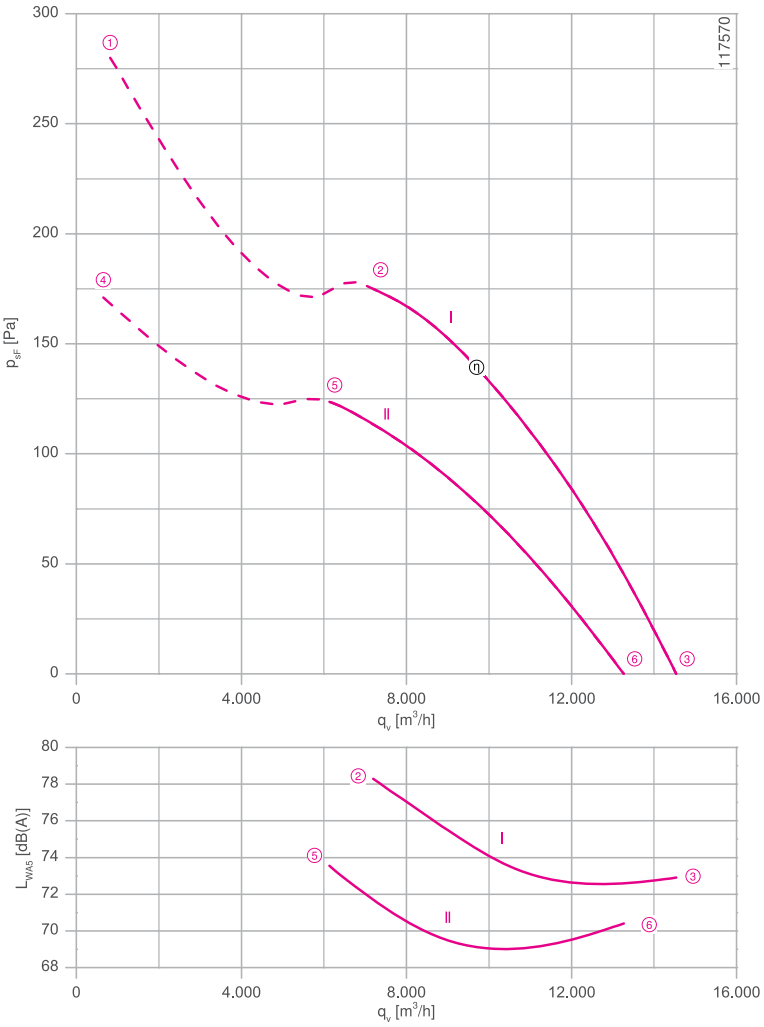

Measured in ZAplus without guard grille in installation type A according to ISO 5801

Description

Motor technology: AC
Rated voltage U_N: **3~ 400 V (Δ/Y) ±10 %***
Rated frequency f_N: **50 Hz*** (60Hz data available)
Input power P_1: **0.94/0.66 kW***
Rated current I_N: **2.40/1.20 A***
Rated speed n_N: **920/ 770 min^{-1}***
Starting current I_A: 9.50 / 3.00 A
Current increase ΔI: 0 %
Thermal class: **THCL155***
Min. permitted ambient temperature $t_{R(min)}$: -40 °C
Max. permitted ambient temperature $t_{R(max)}$: 70 °C
Electrical connection: Terminal box
Number of blades: 7
Protection class: IP54
Motor protection: thermal contact
Blades: Aluminium, uncoated
Rotor: Aluminium, uncoated
Conformity: ErP 2015, CE
ErP-data
Efficiency η_{statA}: 43.9 %
Efficiency: N_{actual} = 50.6 / N_{target} = 40**
* Rated data
**ErP 2015

Connection diagram Page 531
1360-108XA

System components Page 430

Dimensions mm

Airflow direction

Design L - ZAplus Ontop, guard grille suction side

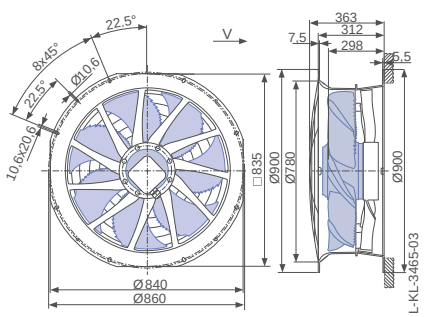

Airflow direction

Design L - ZAplus Ontop without guard grille

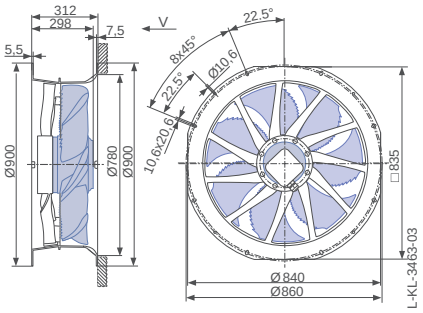

Design L - ZAplus Ontop, guard grille pressure side

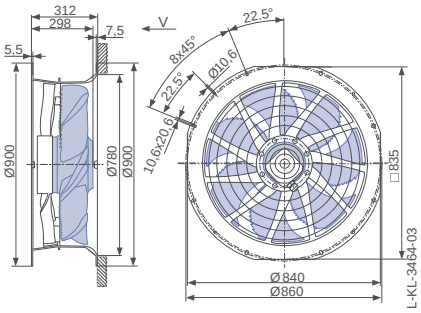

Performance data

Type	Connection	Characteristic curve	Voltage U V	Operating point	Current I A	Input power P_1 W	Speed n min^{-1}	Suction side sound power level L_{WA5} dB(A)
ZN071-SD_.6K.V7P1	Δ	I	400	①	2.70	1250	880	
			400*	②	**2.40***	**940***	**920***	78
			400	③	2.10	580	950	73
	Y	II	400	④	1.45	800	690	
			400*	⑤	**1.20***	**660***	**770***	74
			400	⑥	0.86	440	870	70

*rated data

Fan ordering information

Airflow direction		Airflow direction			
Design	L (guard grille suction side) Ontop	L (without guard grille) Ontop	L (guard grille pressure side) Ontop	H (without guard grille) Flattop	H (guard grille pressure side) Flattop
	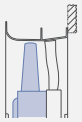		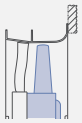	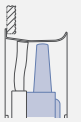	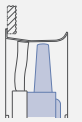
Type **Article no.**	**ZN071-SDL.6K.V7P1** **170455**	**ZN071-SDL.6K.V7P1** **170357**	**ZN071-SDL.6K.V7P1** **170358**	**ZN071-SDH.6K.V7P1** **170452**	**ZN071-SDH.6K.V7P1** **170453**
Weight kg	32.50	30.00	31.20	29.00	30.20

ZAplus attachable on both sides.

Control technology

Frequency inverters Fcontrol 3~	Motor protection units 3~	Electronic voltage controllers 3~
		
Page 480	Page 518	Page 506

Design H - ZAplus Flattop, without guard grille

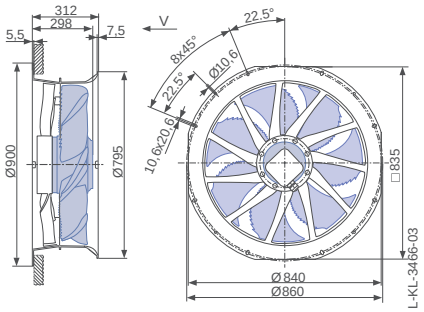

Design H - ZAplus Flattop, guard grille pressure side

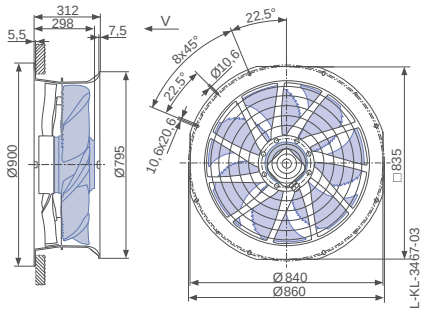

FE2owlet with ZAplus

for three phase alternating current, 8-8 pole

ZN071-AD



Characteristic curve

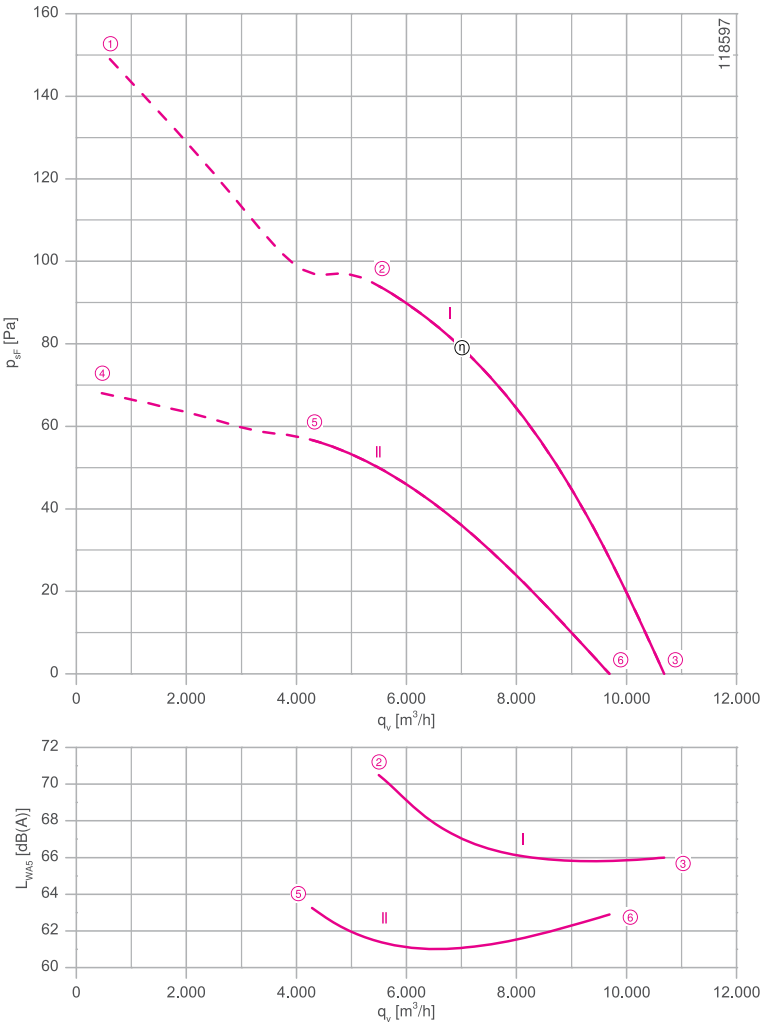

Measured in ZAplus without guard grille in installation type A according to ISO 5801

Description

Motor technology: AC
Rated voltage U_N: **3~ 400 V (Δ/Y) ±10 %***
Rated frequency f_N: **50 Hz*** (60Hz data available)
Input power P_1: **0.44/0.30 kW***
Rated current I_N: **1.05/0.60 A***
Rated speed n_N: **680/ 530 min^{-1}***
Starting current I_A: 3.20 / 0.95 A
Current increase ΔI: 0 %
Thermal class: **THCL155***
Min. permitted ambient temperature $t_{R(min)}$: -40 °C
Max. permitted ambient temperature $t_{R(max)}$: 70 °C
Electrical connection: Terminal box
Number of blades: 7
Protection class: IP54
Motor protection: thermal contact
Blades: Aluminium, uncoated
Rotor: Aluminium, uncoated
Conformity: ErP 2015, CE
ErP-data
Efficiency η_{statA}: 38.0 %
Efficiency: N_{actual} = 46.7 / N_{target} = 40**
* Rated data
**ErP 2015

Connection diagram Page 531
1360-108XA

System components Page 430

Dimensions mm

Airflow direction

Design L - ZAplus Ontop, guard grille suction side

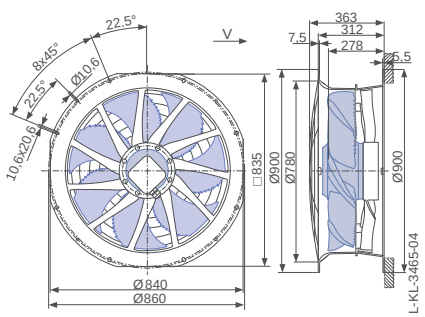

Airflow direction

Design L - ZAplus Ontop without guard grille

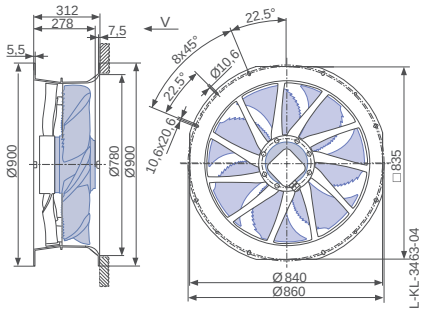

Design L - ZAplus Ontop, guard grille pressure side

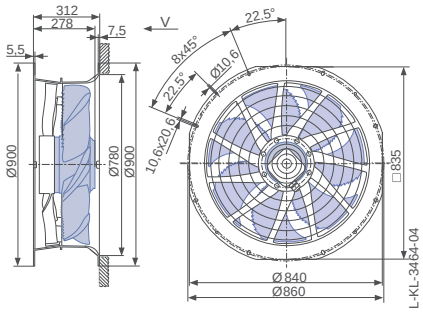

Performance data

Type	Connection	Characteristic curve	Voltage U V	Operating point	Current I A	Input power P_1 W	Speed n min^{-1}	Suction side sound power level L_{WA5} dB(A)
ZN071-AD_.6F._7P1	Δ	I	400	①	1.25	580	650	
			400*	②	**1.05***	**440***	**680***	71
			400	③	0.92	290	710	66
	Y	II	400	④	0.68	330	440	
			400*	⑤	**0.58***	**290***	**530***	63
			400	⑥	0.42	210	630	63

*rated data

Fan ordering information

Airflow direction	Airflow direction				
Design	L (guard grille suction side) Ontop	L (without guard grille) Ontop	L (guard grille pressure side) Ontop	H (without guard grille) Flattop	H (guard grille pressure side) Flattop
	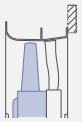		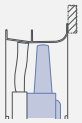	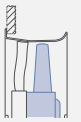	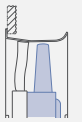
Type **Article no.**	**ZN071-ADL.6F.V7P1** **170465**	**ZN071-ADL.6F.V7P1** **170456**	**ZN071-ADL.6F.V7P1** **170457**	**ZN071-ADH.6F.V7P1** **170462**	**ZN071-ADH.6F.V7P1** **170463**
Weight kg	28.90	26.40	27.60	25.40	26.60

ZAplus attachable on both sides.

Control technology

Frequency inverters Fcontrol 3~	Motor protection units 3~	Electronic voltage controllers 3~
		
Page 480	Page 518	Page 506

Design H - ZAplus Flattop, without guard grille

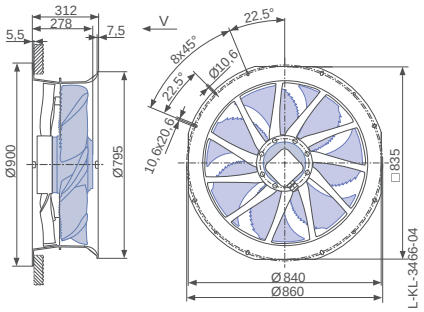

Design H - ZAplus Flattop, guard grille pressure side

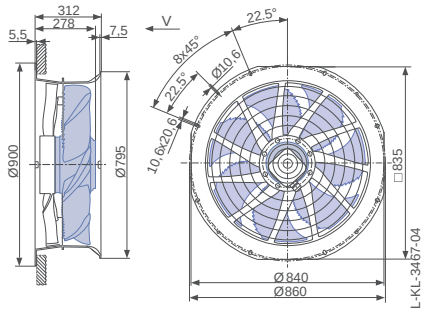

FE2owlet with ZAplus

for three phase alternating current, 12-12 pole

ZN071-ND



Description

Motor technology: AC
Rated voltage U_N: **3~ 400 V (Δ/Y) ±10 %***
Rated frequency f_N: **50 Hz*** (60Hz data available)
Input power P_1: **170/100 W***
Rated current I_N: **0.54/0.23 A***
Rated speed n_N: **450/ 360 min^{-1}***
Starting current I_A: 1.10 / 0.34 A
Current increase ΔI: 0 %
Thermal class: **THCL155***
Min. permitted ambient temperature $t_{R(min)}$: -40 °C
Max. permitted ambient temperature $t_{R(max)}$: 70 °C
Electrical connection: Terminal box
Number of blades: 7
Protection class: IP54
Motor protection: thermal contact
Blades: Aluminium, uncoated
Rotor: Aluminium, uncoated
Conformity: ErP 2015, CE
ErP-data
Efficiency η_{statA}: 28.8 %
Efficiency: N_{actual} = 40.1 / N_{target} = 40**
* Rated data
**ErP 2015

Characteristic curve

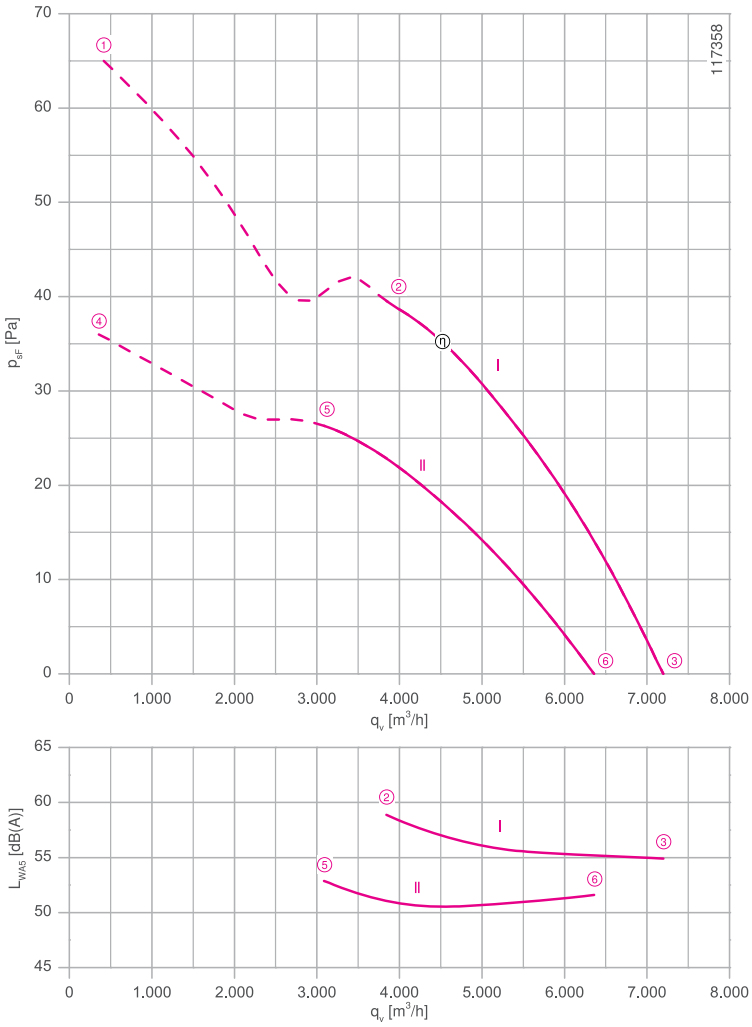

Measured in ZAplus without guard grille in installation type A according to ISO 5801

Connection diagram Page 531
1360-108XA

System components Page 430

Dimensions mm

Airflow direction

Design L - ZAplus Ontop, guard grille suction side

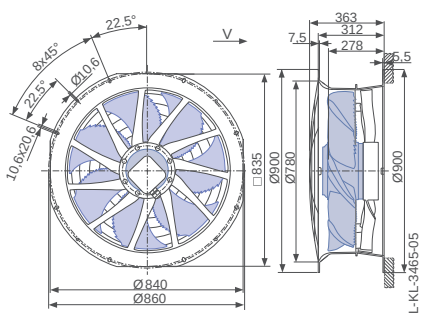

Airflow direction

Design L - ZAplus Ontop without guard grille

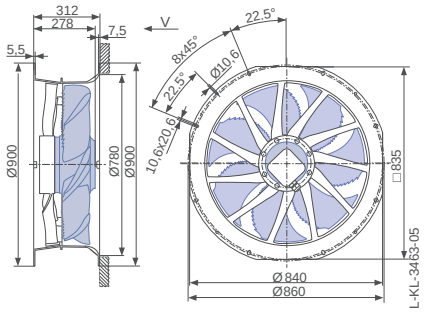

Design L - ZAplus Ontop, guard grille pressure side

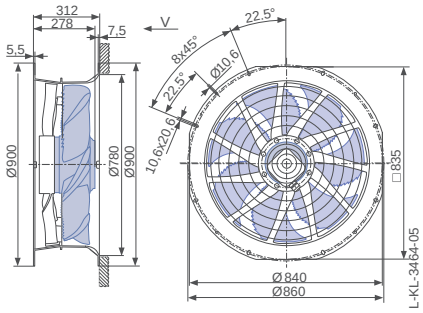

Performance data

Type	Connection	Characteristic curve	Voltage U V	Operating point	Current I A	Input power P_1 W	Speed n min^{-1}	Suction side sound power level L_{WA5} dB(A)
ZN071-ND_.6F._7P1	Δ	I	400	①	0.56	210	430	
			400*	②	**0.54***	**170***	**450***	59
			400	③	0.52	130	470	55
	Y	II	400	④	0.25	110	320	
			400*	⑤	**0.23***	**100***	**370***	53
			400	⑥	0.19	75	420	52

*rated data

Fan ordering information

Airflow direction → Airflow direction

Design	L (guard grille suction side) Ontop	L (without guard grille) Ontop	L (guard grille pressure side) Ontop	H (without guard grille) Flattop	H (guard grille pressure side) Flattop
	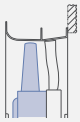		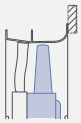		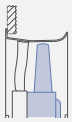
Type **Article no.**	**ZN071-NDL.6F.V7P1** **170475**	**ZN071-NDL.6F.V7P1** **170466**	**ZN071-ADL.6F.V7P1** **170467**	**ZN071-NDH.6F.V7P1** **170472**	**ZN071-ADH.6F.V7P1** **170473**
Weight kg	28.90	26.40	27.60	25.40	26.60

ZAplus attachable on both sides.

Control technology

Frequency inverters Fcontrol 3~	Motor protection units 3~	Electronic voltage controllers 3~
		
Page 480	Page 518	Page 506

Design H - ZAplus Flattop, without guard grille

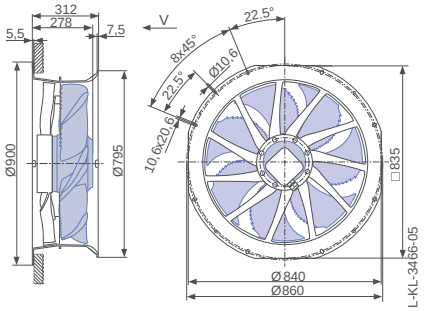

Design H - ZAplus Flattop, guard grille pressure side

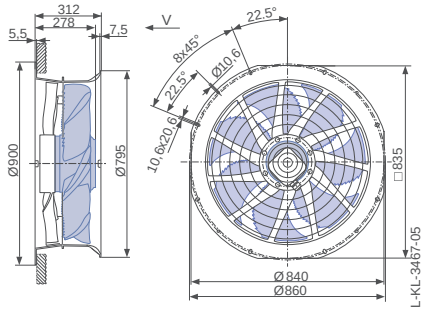

FE2owlet with ZAplus

for three phase alternating current, 6-6 pole

ZN080-SD



Description

Motor technology: AC
Rated voltage U_N: **3~ 400 V (Δ/Y) ±10 %***
Rated frequency f_N: **50 Hz***
Input power P_1: **1.85/1.05 kW***
Rated current I_N: **3.80/2.00 A***
Rated speed n_N: **870/ 640 min^{-1}***
Starting current I_A: 11.00 / 3.40 A
Current increase ΔI: 0 %
Thermal class: **THCL155***
Min. permitted ambient temperature $t_{R(min)}$: -40 °C
Max. permitted ambient temperature $t_{R(max)}$: 60 °C
Electrical connection: Terminal box
Number of blades: 7
Protection class: IP54
Motor protection: thermal contact
Blades: Aluminium, uncoated
Rotor: Aluminium, uncoated
Conformity: ErP 2015, CE
ErP-data
Efficiency η_{statA}: 42.7 %
Efficiency: N_{actual} = 47.5 / N_{target} = 40**
* Rated data
**ErP 2015

Characteristic curve

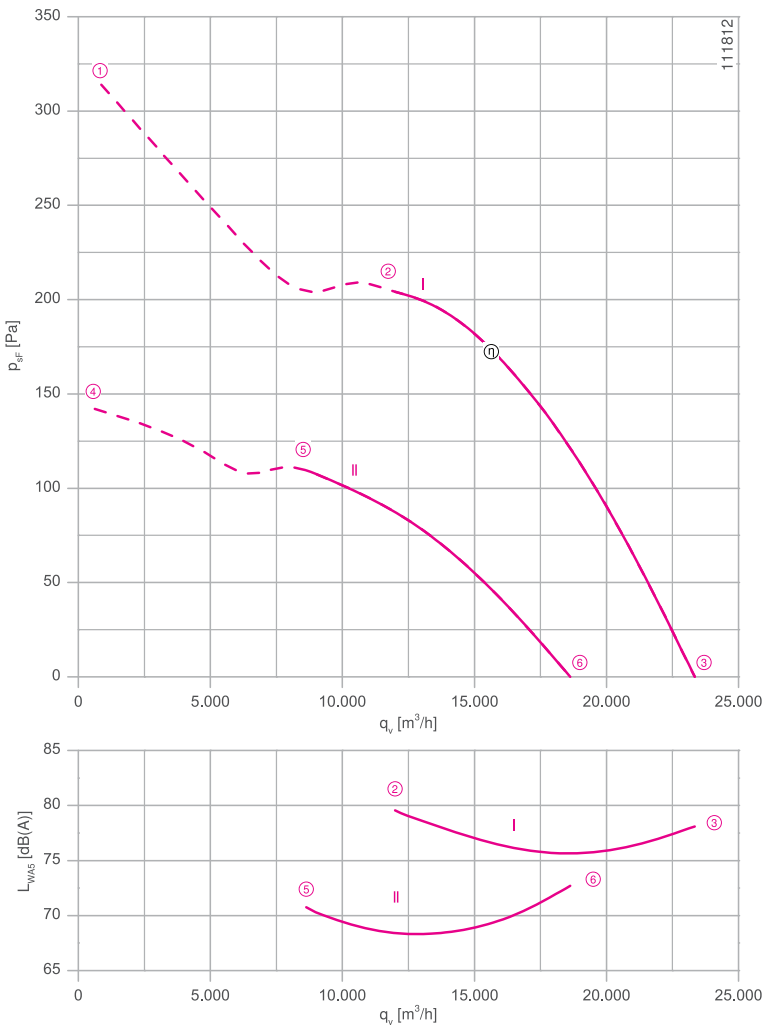

Measured in ZAplus without guard grille in installation type A according to ISO 5801

Connection diagram Page 531
1360-108XA

System components Page 430

Dimensions mm

Airflow direction

Design L - ZAplus Ontop, guard grille suction side

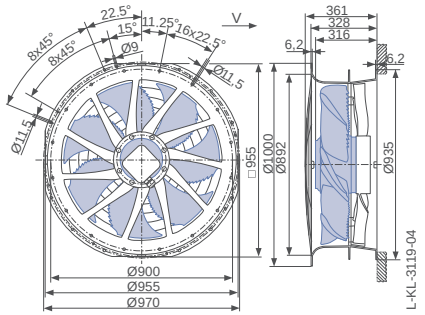

Airflow direction

Design L - ZAplus Ontop without guard grille

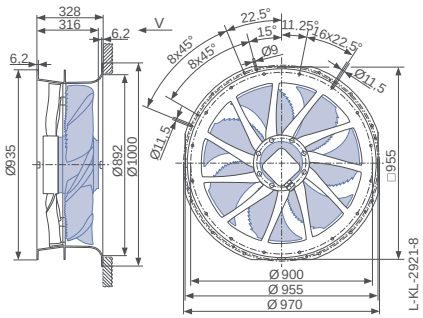

Design L - ZAplus Ontop, guard grille pressure side

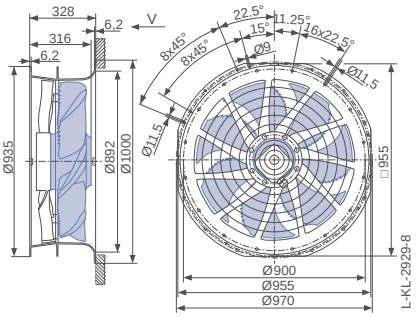

Performance data

Type	Connection	Characteristic curve	Voltage U V	Operating point	Current I A	Input power P_1 W	Speed n min^{-1}	Suction side sound power level L_{WA5} dB(A)
ZN080-SD_.6N.V7P5	Δ	I	400	①	4.80	2400	800	
			400*	②	**3.80***	**1850***	**870***	80
			400	③	3.10	1350	920	78
	Y	II	400	④	2.20	1200	540	
			400*	⑤	**2.00***	**1050***	**640***	71
			400	⑥	1.70	900	730	73

*rated data

Fan ordering information

Airflow direction → Airflow direction

Design	L (guard grille suction side) Ontop	L (without guard grille) Ontop	L (guard grille pressure side) Ontop	Q (without guard grille)	Q (guard grille pressure side)	H (guard grille pressure side) Flattop
	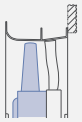		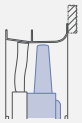	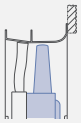		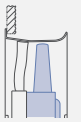
Type **Article no.**	**ZN080-SDL.6N.V7P5** **170240**	**ZN080-SDL.6N.V7P5** **168918**	**ZN080-SDL.6N.V7P5** **168919**	**ZN080-SDQ.6N.V7P5** **168920**	**ZN080-SDQ.6N.V7P5** **168921**	**ZN080-SDH.6N.V7P5** **168925**
Weight kg	41.70	38.80	40.30	41.90	43.40	38.60

ZAplus attachable on both sides.

Control technology

Frequency inverters Fcontrol 3~	Motor protection units 3~	Electronic voltage controllers 3~
		
Page 480	Page 518	Page 506

Design Q - ZAplus with adapter plate, without guard grille

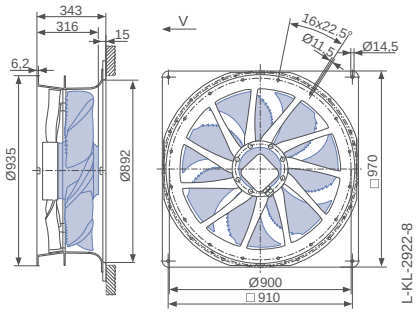

Design Q - ZAplus with adapter plate, guard grille pressure side

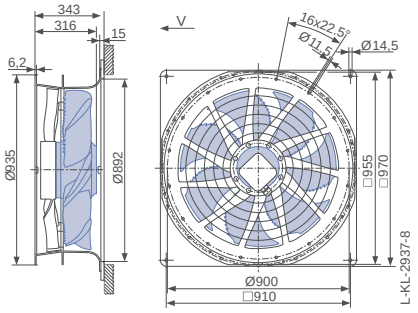

Design H - ZAplus Flattop, guard grille pressure side

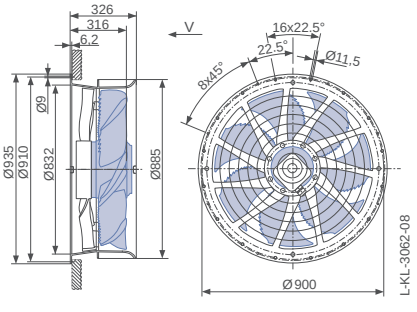

FE2owlet with ZAplus

for three phase alternating current, 6-6 pole

ZN080-SD



Description

Motor technology: AC
Rated voltage U_N: **3~ 400 V (Δ/Y) ±10 %***
Rated frequency f_N: **50 Hz*** (60Hz data available)
Input power P_1: **1.60/0.80 kW***
Rated current I_N: **3.50/1.55 A***
Rated speed n_N: **800/ 560 min^{-1}***
Starting current I_A: 9.50 / 3.00 A
Current increase ΔI: 0 %
Thermal class: **THCL155***
Min. permitted ambient temperature $t_{R(min)}$: -40 °C
Max. permitted ambient temperature $t_{R(max)}$: 70 °C
Electrical connection: Terminal box
Number of blades: 7
Protection class: IP54
Motor protection: thermal contact
Blades: Aluminium, uncoated
Rotor: Aluminium, uncoated
Conformity: ErP 2015, CE
ErP-data
Efficiency η_{statA}: 39.6 %
Efficiency: N_{actual} = 44.7 / N_{target} = 40**
* Rated data
**ErP 2015

Characteristic curve

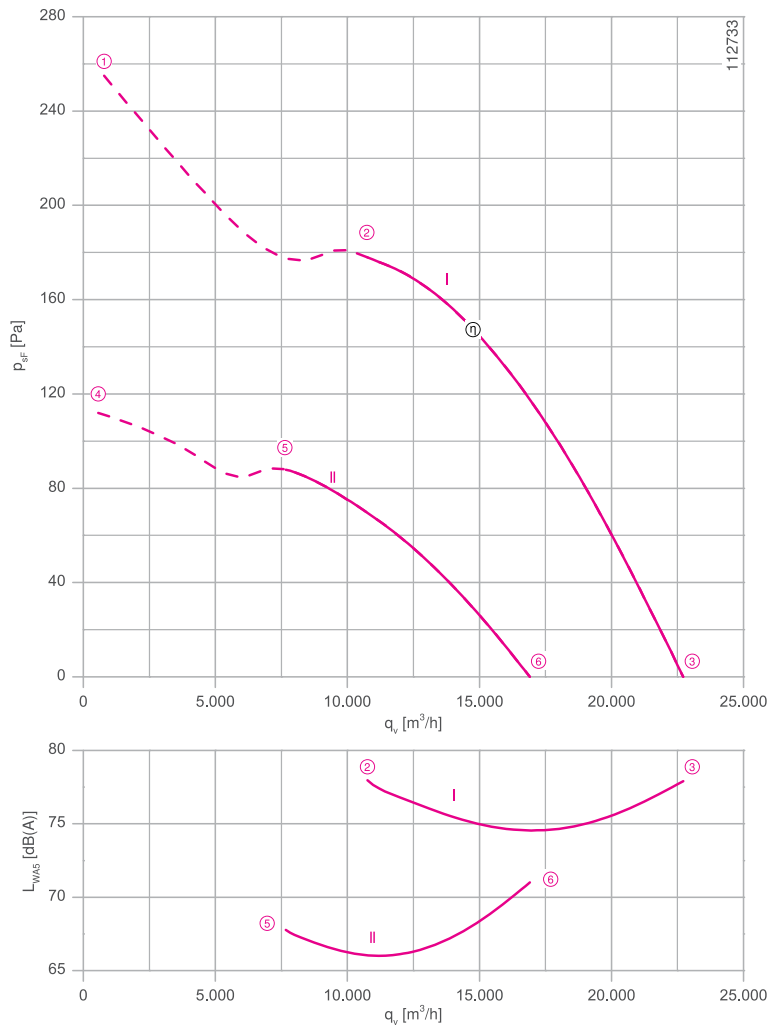

Measured in ZAplus without guard grille in installation type A according to ISO 5801

Connection diagram Page 531
1360-108XA

System components Page 430

Dimensions mm

Airflow direction

Design L - ZAplus Ontop, guard grille suction side

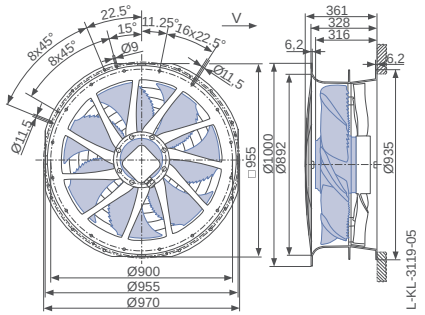

Airflow direction

Design L - ZAplus Ontop without guard grille

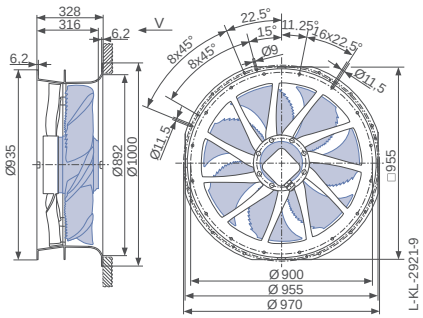

Design L - ZAplus Ontop, guard grille pressure side

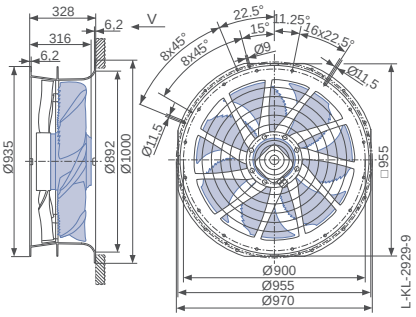

Performance data

Type	Connection	Characteristic curve	Voltage U V	Operating point	Current I A	Input power P_1 W	Speed n min^{-1}	Suction side sound power level L_{WA5} dB(A)
ZN080-SD_.6N.V7P5	Δ	I	400	①	4.00	1950	730	
			400*	②	**3.50***	**1600***	**800***	78
			400	③	3.00	1250	860	78
	Y	II	400	④	1.70	880	480	
			400*	⑤	**1.55***	**800***	**560***	68
			400	⑥	1.40	700	650	71

*rated data

Fan ordering information

Airflow direction → Airflow direction

Design	L (guard grille suction side) Ontop	L (without guard grille) Ontop	L (guard grille pressure side) Ontop	Q (without guard grille)	Q (guard grille pressure side)	H (guard grille pressure side) Flattop
	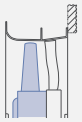		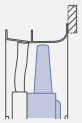	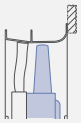		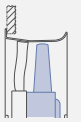
Type **Article no.**	**ZN080-SDL.6N.V7P5** **170241**	**ZN080-SDL.6N.V7P5** **168928**	**ZN080-SDL.6N.V7P5** **168929**	**ZN080-SDQ.6N.V7P5** **168930**	**ZN080-SDQ.6N.V7P5** **168931**	**ZN080-SDH.6N.V7P5** **168935**
Weight kg	41.70	38.80	38.80	41.90	43.40	38.60

ZAplus attachable on both sides.

Control technology

Frequency inverters Fcontrol 3~	Motor protection units 3~	Electronic voltage controllers 3~
		
Page 480	Page 518	Page 506

Design Q - ZAplus with adapter plate, without guard grille

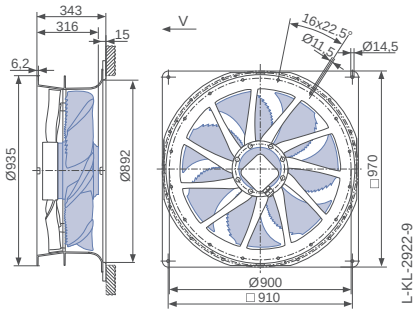

Design Q - ZAplus with adapter plate, guard grille pressure side

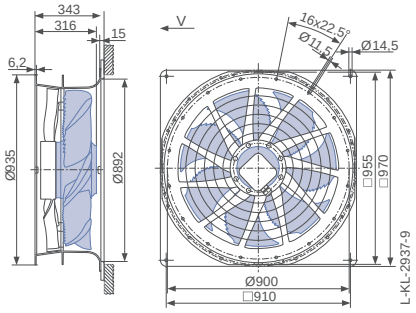

Design H - ZAplus Flattop, guard grille pressure side

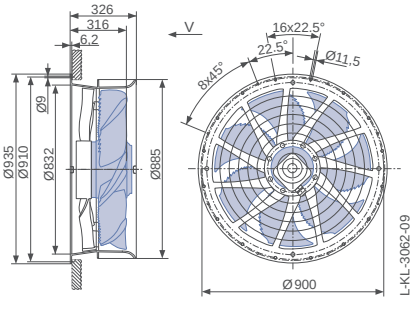

FE2owlet with ZAplus

for three phase alternating current, 8-8 pole

ZN080-AD



Description

Motor technology: AC
Rated voltage U_N: **3~ 400 V (Δ/Y) ±10 %***
Rated frequency f_N: **50 Hz*** (60Hz data available)
Input power P_1: **0.84/0.46 kW***
Rated current I_N: **2.10/0.98 A***
Rated speed n_N: **650/ 480 min^{-1}***
Starting current I_A: 5.50 / 1.60 A
Current increase ΔI: 0 %
Thermal class: **THCL155***
Min. permitted ambient temperature $t_{R(min)}$: -40 °C
Max. permitted ambient temperature $t_{R(max)}$: 70 °C
Electrical connection: Terminal box
Number of blades: 7
Protection class: IP54
Motor protection: thermal contact
Blades: Aluminium, uncoated
Rotor: Aluminium, uncoated
Conformity: ErP 2015, CE
ErP-data
Efficiency η_{statA}: 39.2 %
Efficiency: N_{actual} = 46.1 / N_{target} = 40**
* Rated data
**ErP 2015

Characteristic curve

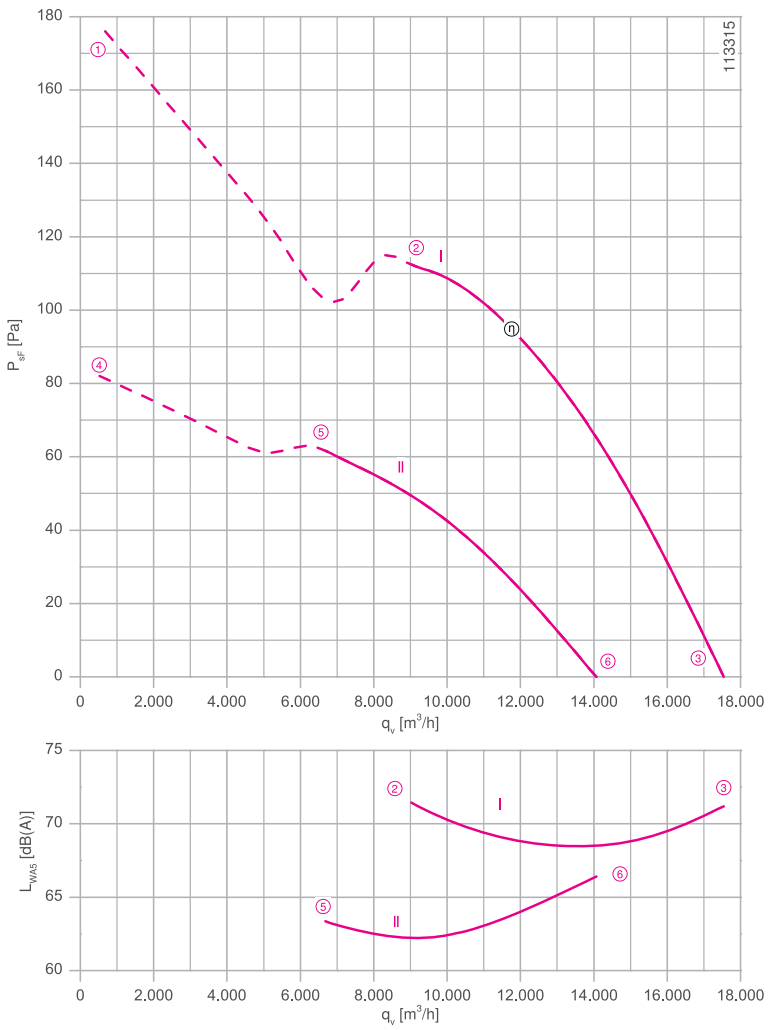

Measured in ZAplus without guard grille in installation type A according to ISO 5801

Connection diagram Page 531
1360-108XA

System components Page 430

Dimensions mm

Airflow direction

Design L - ZAplus Ontop, guard grille suction side

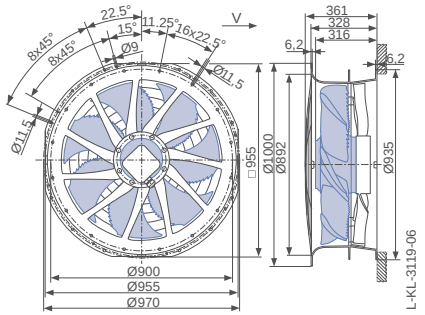

Airflow direction

Design L - ZAplus Ontop without guard grille

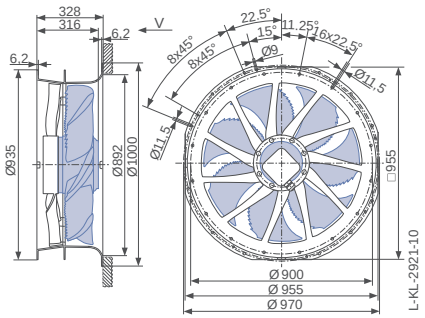

Design L - ZAplus Ontop, guard grille pressure side

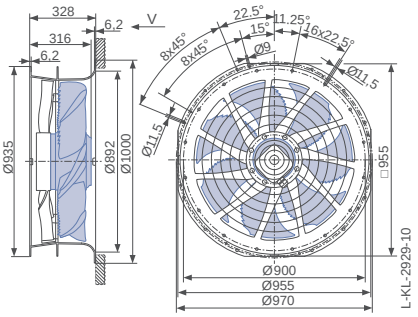

Performance data

Type	Connection	Characteristic curve	Voltage U V	Operating point	Current I A	Input power P_1 W	Speed n min^{-1}	Suction side sound power level L_{WA5} dB(A)
ZN080-AD_.6N.V7P5	Δ	I	400	①	2.50	1050	600	
			400*	②	**2.10***	**840***	**650***	72
			400	③	1.90	620	690	71
	Y	II	400	④	1.10	520	410	
			400*	⑤	**0.98***	**460***	**480***	64
			400	⑥	0.86	390	550	66

*rated data

Fan ordering information

Airflow direction → Airflow direction

Design	L (guard grille suction side) Ontop	L (without guard grille) Ontop	L (guard grille pressure side) Ontop	Q (without guard grille)	Q (guard grille pressure side)	H (guard grille pressure side) Flattop
	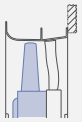		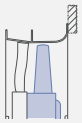	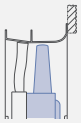		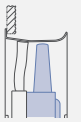
Type **Article no.**	**ZN080-ADL.6N.V7P5** **170242**	**ZN080-ADL.6N.V7P5** **168989**	**ZN080-ADL.6N.V7P5** **168990**	**ZN080-ADQ.6N.V7P5** **168991**	**ZN080-ADQ.6N.V7P5** **168992**	**ZN080-ADH.6N.V7P5** **168996**
Weight kg	41.70	38.80	40.30	41.90	43.40	38.60

ZAplus attachable on both sides.

Control technology

Frequency inverters Fcontrol 3~	Motor protection units 3~	Electronic voltage controllers 3~
		
Page 480	Page 518	Page 506

Design Q - ZAplus with adapter plate, without guard grille

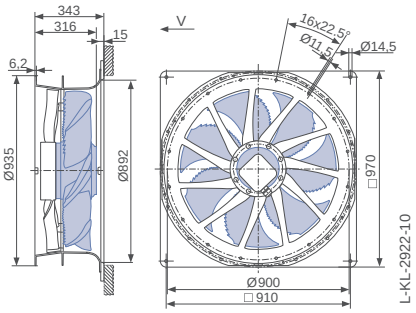

Design Q - ZAplus with adapter plate, guard grille pressure side

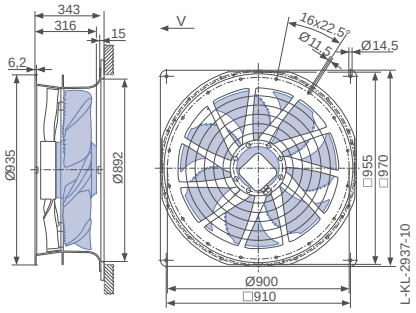

Design H - ZAplus Flattop, guard grille pressure side

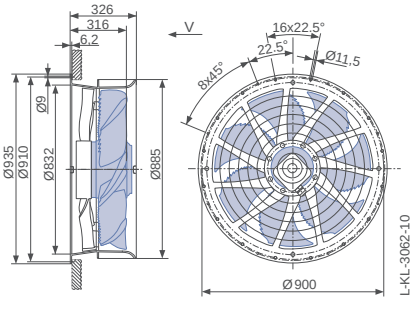

FE2owlet with ZAplus

for three phase alternating current, 12-12 pole

ZN080-ND



Description

Motor technology: AC
Rated voltage U_N: **3~ 400 V (Δ/Y) ±10 %***
Rated frequency f_N: **50 Hz*** (60Hz data available)
Input power P_1: **310/190 W***
Rated current I_N: **0.78/0.38 A***
Rated speed n_N: **440/ 340 min^{-1}***
Current increase ΔI: 0 %
Thermal class: **THCL155***
Min. permitted ambient temperature $t_{R(min)}$: -40 °C
Max. permitted ambient temperature $t_{R(max)}$: 70 °C
Electrical connection: Terminal box
Number of blades: 7
Protection class: IP54
Motor protection: thermal contact
Blades: Aluminium, uncoated
Rotor: Aluminium, uncoated
Conformity: ErP 2015, CE
ErP-data
Efficiency η_{statA}: 33.6 %
Efficiency: N_{actual} = 43.2 / N_{target} = 40**
* Rated data
**ErP 2015

Characteristic curve

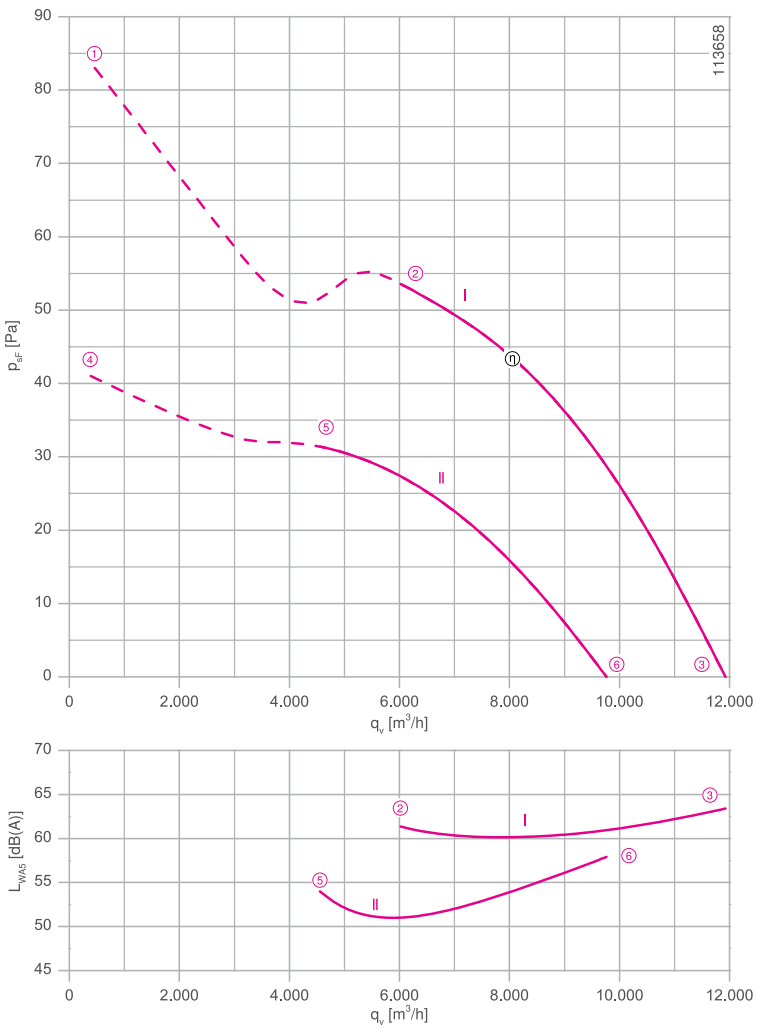

Measured in ZAplus without guard grille in installation type A according to ISO 5801

Connection diagram Page 531
1360-108XA

System components Page 430

Dimensions mm

Airflow direction

Design L - ZAplus Ontop, guard grille suction side

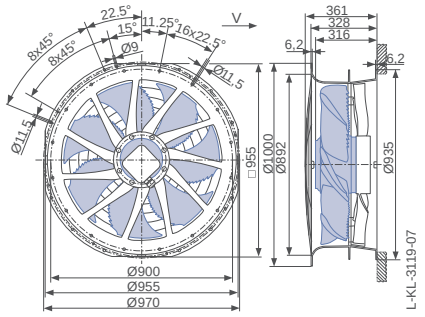

Airflow direction

Design L - ZAplus Ontop without guard grille

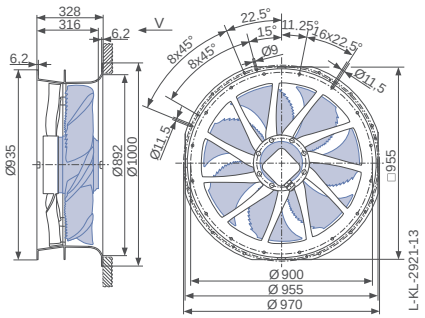

Design L - ZAplus Ontop, guard grille pressure side

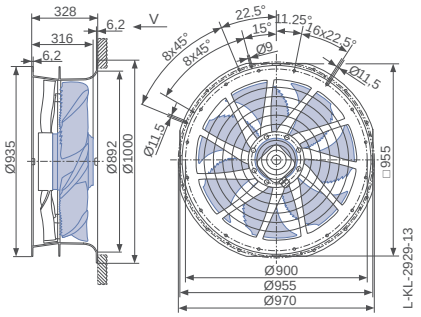

Performance data

Type	Connection	Characteristic curve	Voltage U V	Operating point	Current I A	Input power P_1 W	Speed n min^{-1}	Suction side sound power level L_{WA5} dB(A)
ZN080-ND_.6N._7P5	Δ	I	400	①	0.88	390	410	
			400*	②	**0.78***	**310***	**440***	62
			400	③	0.74	240	460	63
	Y	II	400	④	0.42	210	290	
			400*	⑤	**0.38***	**190***	**340***	54
			400	⑥	0.33	160	380	58

*rated data

Fan ordering information

Airflow direction → Airflow direction

Design	L (guard grille suction side) Ontop	L (without guard grille) Ontop	L (guard grille pressure side) Ontop	Q (without guard grille)	Q (guard grille pressure side)	H (guard grille pressure side) Flattop
	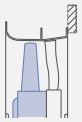		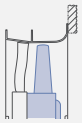	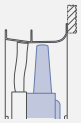		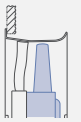
Type **Article no.**	**ZN080-NDL.6N.V7P5** **170243**	**ZN080-NDL.6N.V7P5** **169061**	**ZN080-NDL.6N.V7P5** **169062**	**ZN080-NDQ.6N.V7P5** **169063**	**ZN080-NDQ.6N.V7P5** **169064**	**ZN080-NDH.6N.V7P5** **169068**
Weight kg	41.70	38.80	40.30	41.90	43.40	38.60

ZAplus attachable on both sides.

Control technology

Frequency inverters Fcontrol 3~	Motor protection units 3~	Electronic voltage controllers 3~
		
Page 480	Page 518	Page 506

Design Q - ZAplus with adapter plate, without guard grille

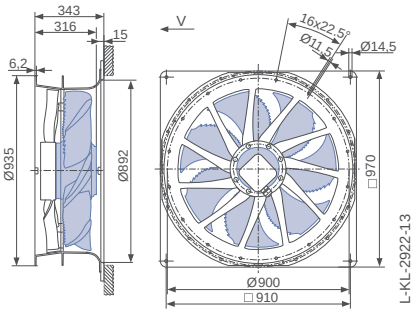

Design Q - ZAplus with adapter plate, guard grille pressure side

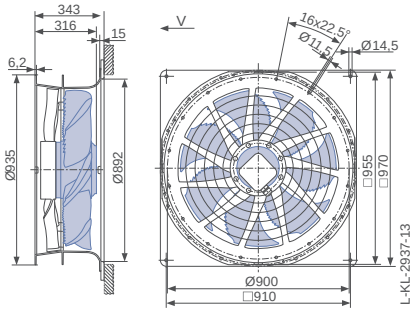

Design H - ZAplus Flattop, guard grille pressure side

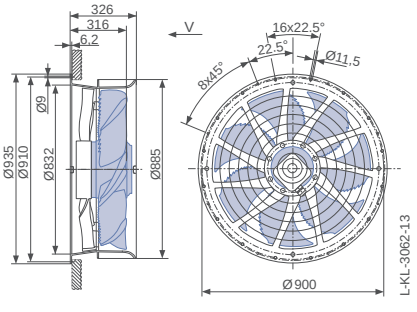

FE2owlet with ZAplus

for three phase alternating current, 4-4 pole

ZN091-VD



Characteristic curve

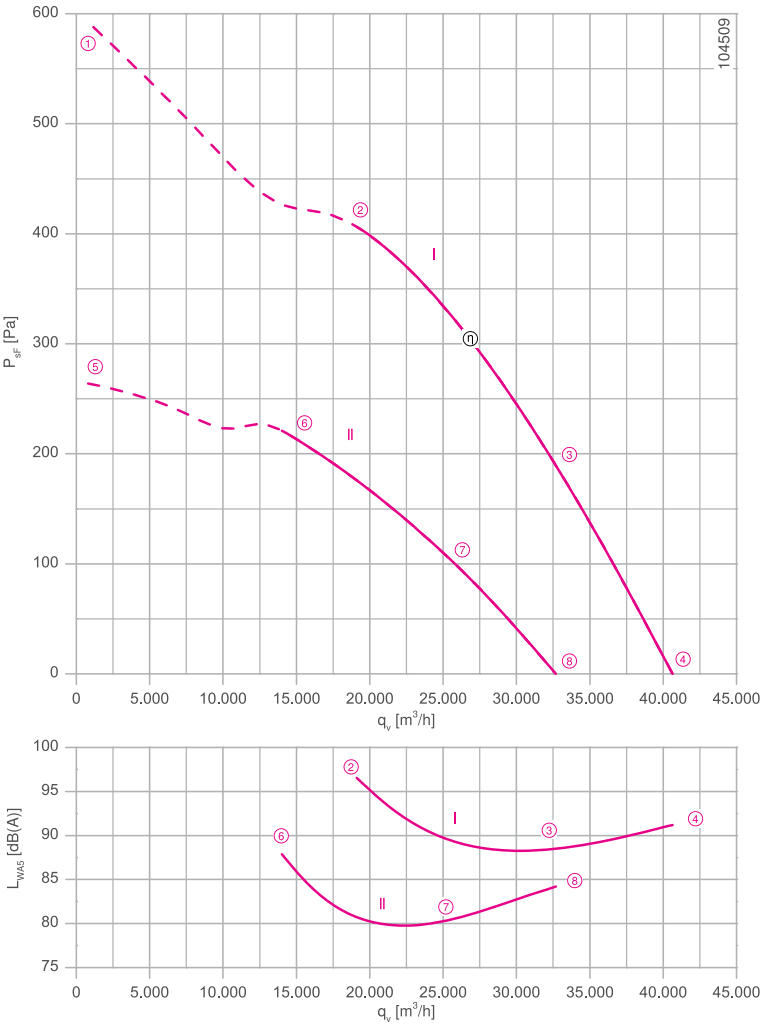

Measured in ZAplus without guard grille in installation type A according to ISO 5801

Description

Motor technology: AC
Rated voltage U_N: **3~ 400 V (Δ/Y) ±10 %***
Rated frequency f_N: **5 Hz***
Input power P_1: **5.40/3.20 kW***
Rated current I_N: **9.00/5.20 A***
Rated speed n_N: **1230/ 900 min^{-1}***
Starting current I_A: 32.00 / 10.00 A
Current increase ΔI: 0 %
Thermal class: **THCL155***
Min. permitted ambient temperature $t_{R(min)}$: -40 °C
Max. permitted ambient temperature $t_{R(max)}$: 40 °C
Electrical connection: Terminal box
Number of blades: 5
Protection class: IP54
Motor protection: thermal contact
Blades: Aluminium, uncoated
Rotor: Aluminium, uncoated
Conformity: ErP 2015, CE
ErP-data
Efficiency η_{statA}: 45.7 %
Efficiency: N_{actual} = 47.6 / N_{target} = 40**
* Rated data
**ErP 2015

Connection diagram Page 531
1360-108XA

System components Page 430

Dimensions mm

Airflow direction

Design L - ZAplus Ontop, guard grille suction side

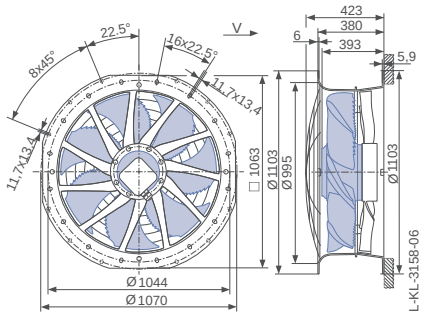

Airflow direction

Design L - ZAplus Ontop without guard grille

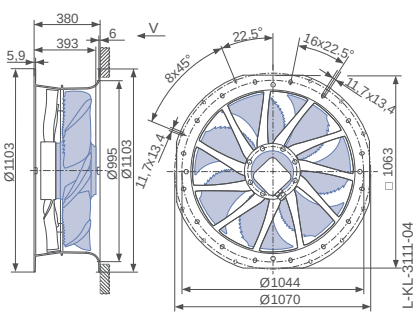

Design L - ZAplus Ontop, guard grille pressure side

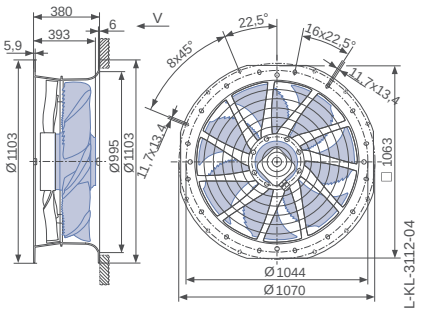

Performance data

Type	Connection	Characteristic curve	Voltage U V	Operating point	Current I A	Input power P_1 W	Speed n min^{-1}	Suction side sound power level L_{WA5} dB(A)	Maximum ambient temperature t_R °C
ZN091-VD_.7Q._5P1	Δ	I	400	①	12.00	7400	1100		40
			400*	②	**9.00***	**5400***	**1230***	97	
			400	③	7.80	4600	1280	88	60
			400	④	6.40	3700	1330	91	
	Y	II	400	⑤	6.00	3700	740		40
			400*	⑥	**5.20***	**3200***	**900***	88	
			400	⑦	4.80	2900	980	80	60
			400	⑧	4.00	2500	1070	84	

*rated data

Fan ordering information

Airflow direction ⟷ Airflow direction

Design	L (guard grille suction side) Ontop	L (without guard grille) Ontop	L (guard grille pressure side) Ontop	Q (guard grille pressure side)	H (guard grille pressure side) Flattop
	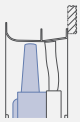		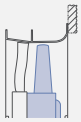		
Type **Article no.**	**ZN091-VDL.7Q.V5P1** **169901**	**ZN091-VDL.7Q.V5P1** **165077**	**ZN091-VDL.7Q.V5P1** **165078**	**ZN091-VDQ.7Q.V5P1** **165083**	**ZN091-VDH.7Q.V5P1** **165087**
Weight kg	60.00	56.40	58.30	62.20	58.30

ZAplus attachable on both sides.

Control technology

Frequency inverters Fcontrol 3~	Motor protection units 3~	Electronic voltage controllers 3~
		
Page 480	Page 518	Page 506

Design Q - ZAplus with adapter plate, guard grille pressure side

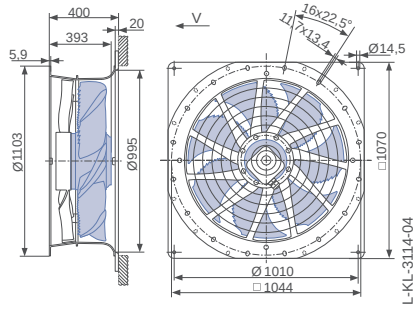

Design H - ZAplus Flattop, guard grille pressure side

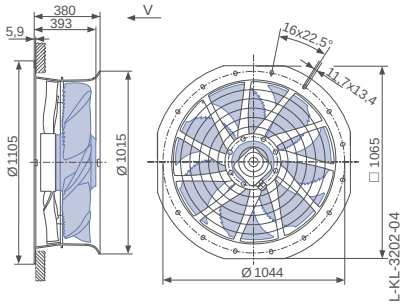

FE2owlet with ZAplus

for three phase alternating current, 6-6 pole

ZN091-SD



Description

Motor technology: AC
Rated voltage U_N: **3~ 400 V (Δ/Y) ±10 %***
Rated frequency f_N: **50 Hz*** (60Hz data available)
Input power P_1: **1.85/1.05 kW***
Rated current I_N: **3.80/1.90 A***
Rated speed n_N: **850/ 640 min^{-1}***
Starting current I_A: 11.00 / 3.40 A
Current increase ΔI: 0 %
Thermal class: **THCL155***
Min. permitted ambient temperature $t_{R(min)}$: -40 °C
Max. permitted ambient temperature $t_{R(max)}$: 65 °C
Electrical connection: Terminal box
Number of blades: 7
Protection class: IP54
Motor protection: thermal contact
Blades: Aluminium, uncoated
Rotor: Aluminium, uncoated
Conformity: ErP 2015, CE
ErP-data
Efficiency η_{statA}: 44.7 %
Efficiency: N_{actual} = 49.6 / N_{target} = 40**
* Rated data
**ErP 2015

Characteristic curve

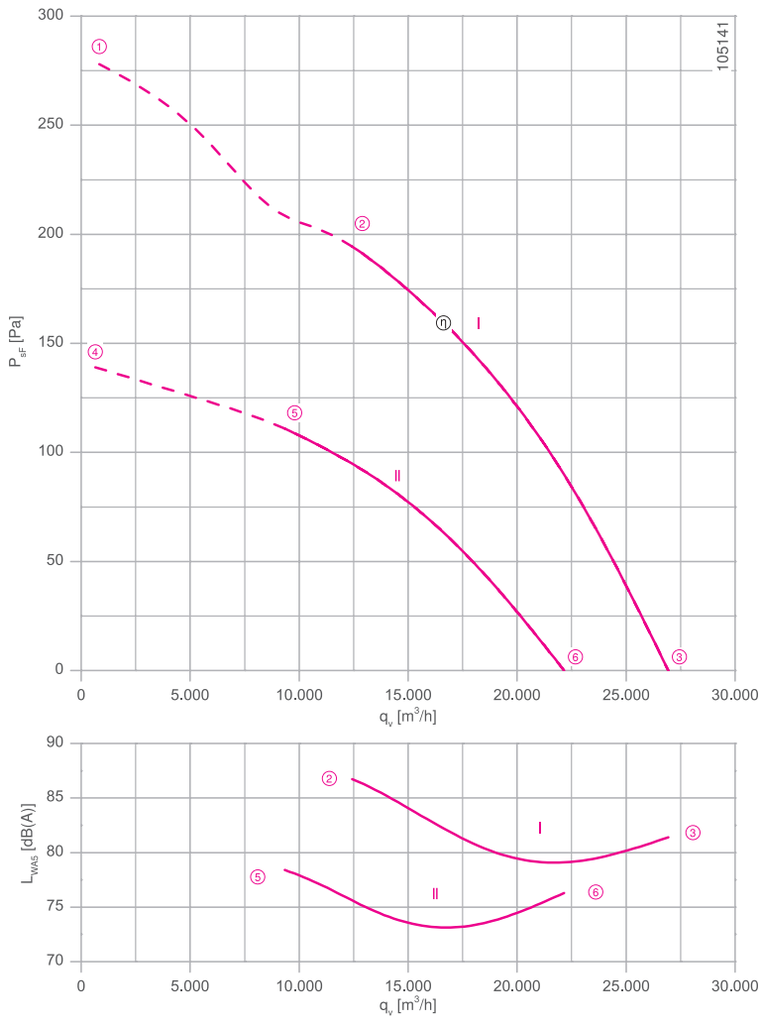

Measured in ZAplus without guard grille in installation type A according to ISO 5801

Connection diagram Page 531
1360-108XA

System components Page 430

Dimensions mm

Airflow direction

Design L - ZAplus Ontop, guard grille suction side

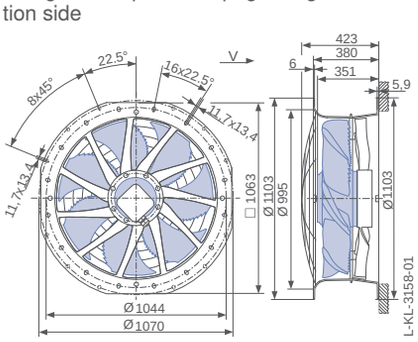

Airflow direction

Design L - ZAplus Ontop without guard grille

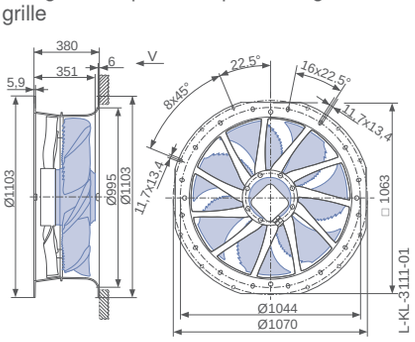

Design L - ZAplus Ontop, guard grille pressure side

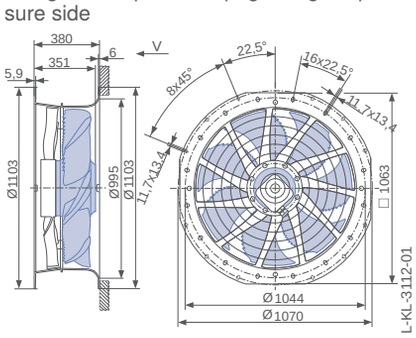

Performance data

Type	Connection	Characteristic curve	Voltage U V	Operating point	Current I A	Input power P_1 W	Speed n min^{-1}	Suction side sound power level L_{WA5} dB(A)
ZN091-SD_.6N.V7P2	Δ	I	400	①	4.40	2300	790	
			400*	②	**3.80***	**1750***	**840***	87
			400	③	3.10	1200	910	81
	Y	II	400	④	2.10	1200	550	
			400*	⑤	**1.85***	**1050***	**640***	78
			400	⑥	1.50	800	750	76

*rated data

Fan ordering information

Airflow direction → Airflow direction

Design	L (guard grille suction side) Ontop	L (without guard grille) Ontop	L (guard grille pressure side) Ontop	Q (without guard grille)	Q (guard grille pressure side)	H (guard grille pressure side) Flattop
	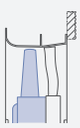				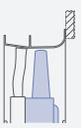	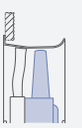
Type **Article no.**	**ZN091-SDL.6N.V7P2** **167289**	**ZN091-SDL.6N.V7P2** **165044**	**ZN091-SDL.6N.V7P2** **165045**	**ZN091-SDQ.6N.V7P2** **165049**	**ZN091-SDQ.6N.V7P2** **165050**	**ZN091-SDH.6N.V7P2** **165054**
Weight kg	44.50	40.90	42.80	44.40	46.30	42.50

ZAplus attachable on both sides.

Control technology

Frequency inverters Fcontrol 3~	Motor protection units 3~	Electronic voltage controllers 3~
		
Page 480	Page 518	Page 506

Design Q - ZAplus with adapter plate, without guard grille

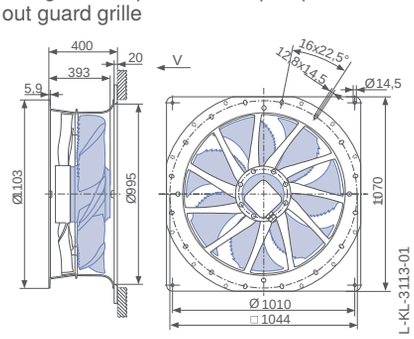

Design Q - ZAplus with adapter plate, guard grille pressure side

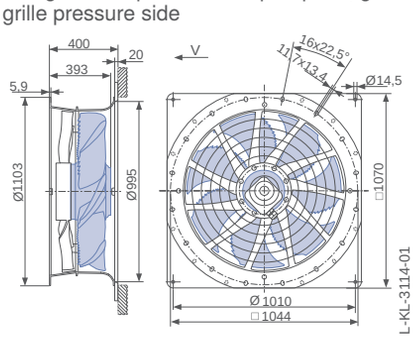

Design H - ZAplus Flattop, guard grille pressure side

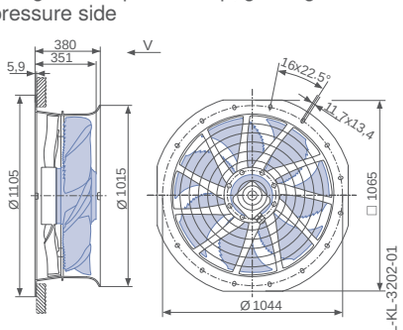

FE2owlet with ZAplus

for three phase alternating current, 6-6 pole

ZN091-SD



Description

Motor technology: AC
Rated voltage U_N: **3~ 400 V (Δ/Y) ±10 %***
Rated frequency f_N: **50 Hz*** (60Hz data available)
Input power P_1: **1.95/1.30 kW***
Rated current I_N: **4.20/2.30 A***
Rated speed n_N: **890/ 730 min^{-1}***
Starting current I_A: 17.00 / 5.50 A
Current increase ΔI: 0 %
Thermal class: **THCL155***
Min. permitted ambient temperature $t_{R(min)}$: -40 °C
Max. permitted ambient temperature $t_{R(max)}$: 70 °C
Electrical connection: Terminal box
Number of blades: 5
Protection class: IP54
Motor protection: thermal contact
Blades: Aluminium, uncoated
Rotor: Aluminium, uncoated
Conformity: ErP 2015, CE
ErP-data
Efficiency η_{statA}: 49.3 %
Efficiency: N_{actual} = 53.9 / N_{target} = 40**
* Rated data
**ErP 2015

Characteristic curve

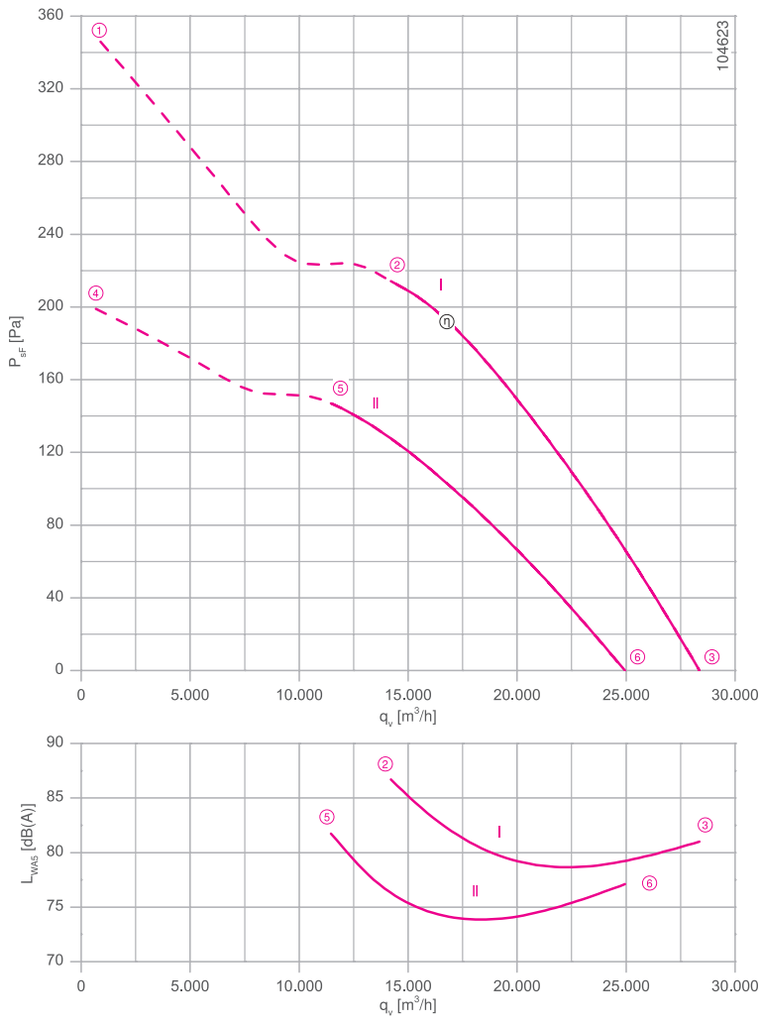

Measured in ZAplus without guard grille in installation type A according to ISO 5801

Connection diagram Page 531
1360-108XA

System components Page 430

Dimensions mm

Airflow direction

Design L - ZAplus Ontop, guard grille suction side

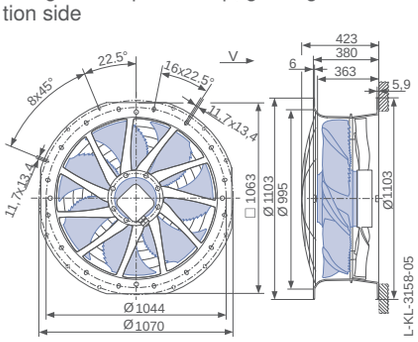

Airflow direction

Design L - ZAplus Ontop without guard grille

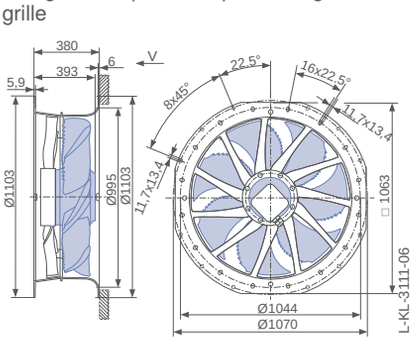

Design L - ZAplus Ontop, guard grille pressure side

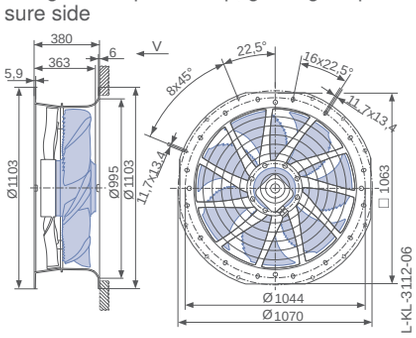

Performance data

Type	Connection	Characteristic curve	Voltage U V	Operating point	Current I A	Input power P_1 W	Speed n min^{-1}	Suction side sound power level L_{WA5} dB(A)
ZN091-SD_.7M.V5P1	Δ	I	400	①	5.40	2800	830	
			400*	②	**4.20***	**1950***	**890***	87
			400	③	3.60	1300	930	81
	Y	II	400	④	2.90	1700	630	
			400*	⑤	**2.30***	**1300***	**730***	82
			400	⑥	1.75	980	820	77

*rated data

Fan ordering information

Airflow direction → Airflow direction

Design	L (guard grille suction side) Ontop	L (without guard grille) Ontop	L (guard grille pressure side) Ontop	Q (without guard grille)	Q (guard grille pressure side)	H (guard grille pressure side) Flattop
	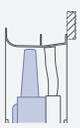	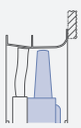				
Type **Article no.**	**ZN091-SDL.7M.V5P1** **167293**	**ZN091-SDL.7M.V5P1** **165099**	**ZN091-SDL.7M.V5P1** **165100**	**ZN091-SDQ.7M.V5P1** **165104**	**ZN091-SDQ.7M.V5P1** **165105**	**ZN091-SDH.7M.V5P1** **165109**
Weight kg	53.70	50.10	52.00	54.00	55.90	52.00

ZAplus attachable on both sides.

Control technology

Frequency inverters Fcontrol 3~	Motor protection units 3~	Electronic voltage controllers 3~
		
Page 480	Page 518	Page 506

Design Q - ZAplus with adapter plate, without guard grille

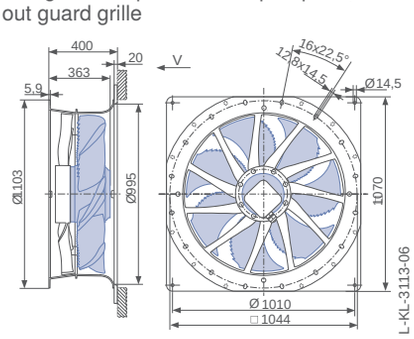

Design Q - ZAplus with adapter plate, guard grille pressure side

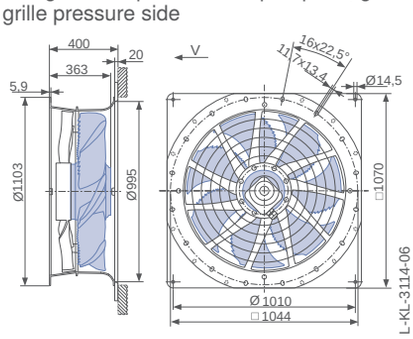

Design H - ZAplus Flattop, guard grille pressure side

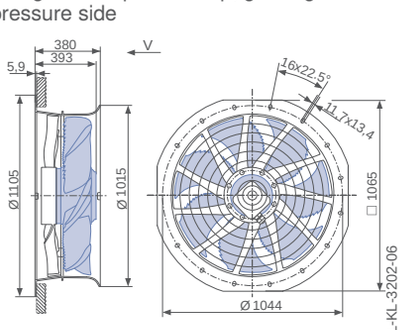

FE2owlet with ZAplus

for three phase alternating current, 8-8 pole

ZN091-AD



Description

Motor technology: AC
Rated voltage U_N: **3~ 400 V (Δ/Y) ±10 %***
Rated frequency f_N: **50 Hz*** (60Hz data available)
Input power P_1: **0.90/0.54 kW***
Rated current I_N: **2.20/1.10 A***
Rated speed n_N: **660/ 500 min^{-1}***
Starting current I_A: 5.50 / 1.60 A
Current increase ΔI: 0 %
Thermal class: **THCL155***
Min. permitted ambient temperature $t_{R(min)}$: -40 °C
Max. permitted ambient temperature $t_{R(max)}$: 70 °C
Electrical connection: Terminal box
Number of blades: 7
Protection class: IP54
Motor protection: thermal contact
Blades: Aluminium, uncoated
Rotor: Aluminium, uncoated
Conformity: ErP 2015, CE
ErP-data
Efficiency η_{statA}: 43.4 %
Efficiency: N_{actual} = 50.1 / N_{target} = 40**
* Rated data
**ErP 2015

Characteristic curve

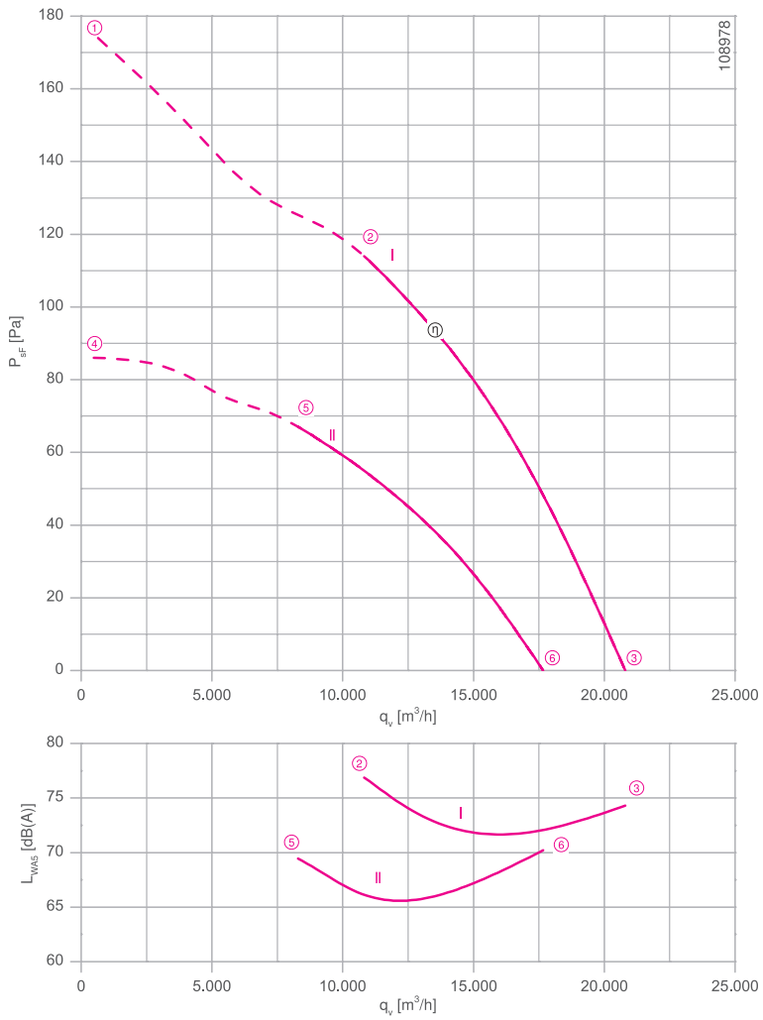

Measured in ZAplus without guard grille in installation type A according to ISO 5801

Connection diagram Page 531
1360-108XA

System components Page 430

Dimensions mm

Airflow direction

Design L - ZAplus Ontop, guard grille suction side

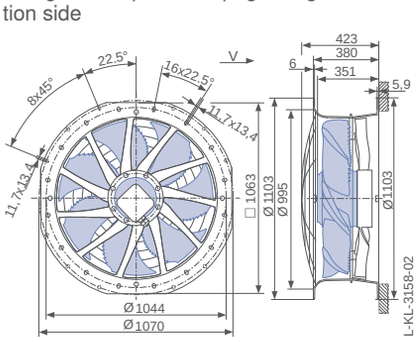

Airflow direction

Design L - ZAplus Ontop without guard grille

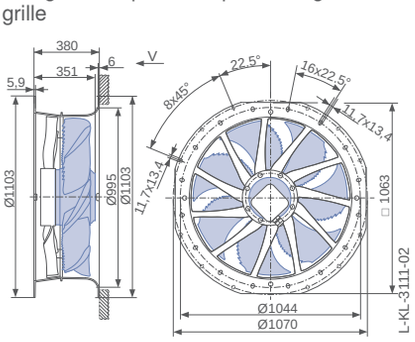

Design L - ZAplus Ontop, guard grille pressure side

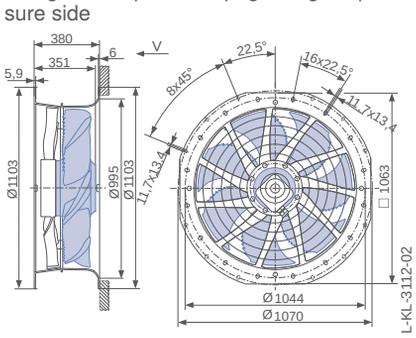

Performance data

Type	Connection	Characteristic curve	Voltage U V	Operating point	Current I A	Input power P_1 W	Speed n min^{-1}	Suction side sound power level L_{WA5} dB(A)
ZN091-AD_.6N._7P2	Δ	I	400	①	2.50	1150	610	
			400*	②	**2.10***	**880***	**660***	77
			400	③	1.80	600	700	74
	Y	II	400	④	1.25	620	430	
			400*	⑤	**1.10***	**540***	**510***	69
			400	⑥	0.88	420	600	70

*rated data

Fan ordering information

Airflow direction → Airflow direction

Design	L (guard grille suction side) Ontop	L (without guard grille) Ontop	L (guard grille pressure side) Ontop	Q (without guard grille)	Q (guard grille pressure side)	H (guard grille pressure side) Flattop
	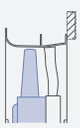				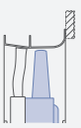	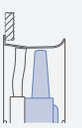
Type **Article no.**	**ZN091-ADL.6N.V7P2** **167290**	**ZN091-ADL.6N.V7P2** **165055**	**ZN091-ADL.6N.V7P2** **165056**	**ZN091-ADQ.6N.V7P2** **165060**	**ZN091-ADQ.6N.V7P2** **165061**	**ZN091-ADH.6N.V7P2** **165065**
Weight kg	44.50	40.90	42.80	44.40	46.30	42.50

ZAplus attachable on both sides.

Control technology

Frequency inverters Fcontrol 3~	Motor protection units 3~	Electronic voltage controllers 3~
		
Page 480	Page 518	Page 506

Design Q - ZAplus with adapter plate, without guard grille

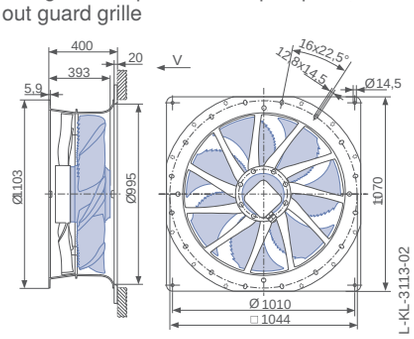

Design Q - ZAplus with adapter plate, guard grille pressure side

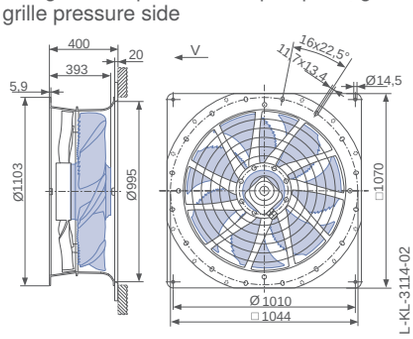

Design H - ZAplus Flattop, guard grille pressure side

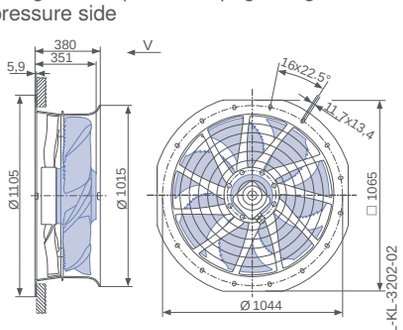

FE2owlet with ZAplus

for three phase alternating current, 12-12 pole

ZN091-ND



Description

Motor technology: AC
Rated voltage U_N: **3~ 400 V (Δ/Y) ±10 %***
Rated frequency f_N: **50 Hz*** (60Hz data available)
Input power P_1: **300/180 W***
Rated current I_N: **0.76/0.37 A***
Rated speed n_N: **430/ 330 min^{-1}***
Current increase ΔI: 0 %
Thermal class: **THCL155***
Min. permitted ambient temperature $t_{R(min)}$: -40 °C
Max. permitted ambient temperature $t_{R(max)}$: 70 °C
Electrical connection: Terminal box
Number of blades: 7
Protection class: IP54
Motor protection: thermal contact
Blades: Aluminium, uncoated
Rotor: Aluminium, uncoated
Conformity: ErP 2015, CE
ErP-data
Efficiency η_{statA}: 34.9 %
Efficiency: N_{actual} = 44.7 / N_{target} = 40**
* Rated data
**ErP 2015

Characteristic curve

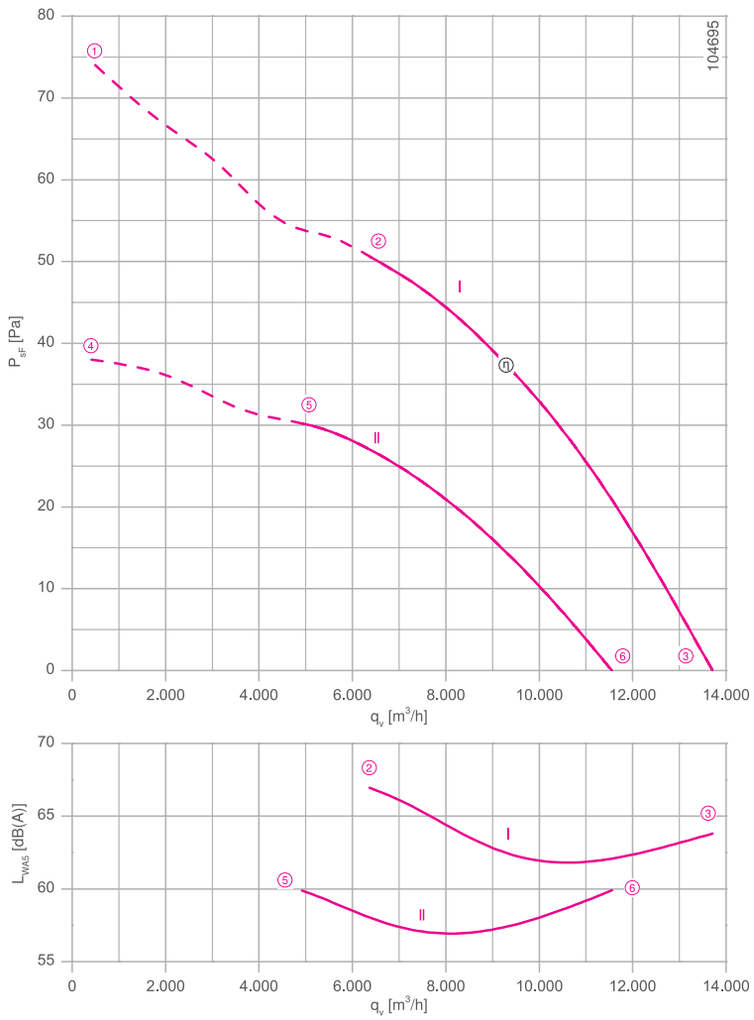

Measured in ZAplus without guard grille in installation type A according to ISO 5801

Connection diagram Page 531
1360-108XA

System components Page 430

Dimensions mm

Airflow direction

Design L - ZAplus Ontop, guard grille suction side

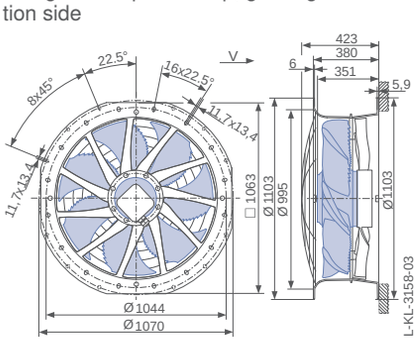

Airflow direction

Design L - ZAplus Ontop without guard grille

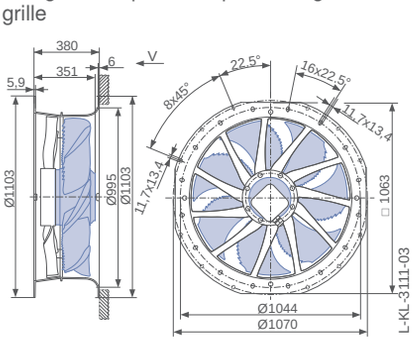

Design L - ZAplus Ontop, guard grille pressure side

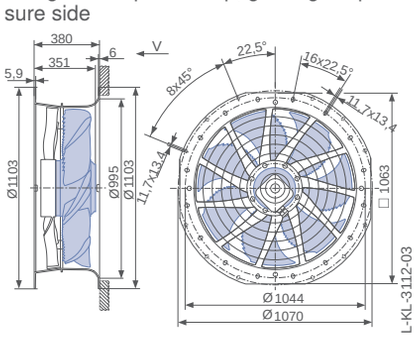

Performance data

Type	Connection	Characteristic curve	Voltage U V	Operating point	Current I A	Input power P_1 W	Speed n min^{-1}	Suction side sound power level L_{WA5} dB(A)
ZN091-ND_.6N.V7P2	Δ	I	400	①	0.84	380	410	
			400*	②	**0.76***	**300***	**430***	67
			400	③	0.68	220	460	64
	Y	II	400	④	0.40	210	290	
			400*	⑤	**0.37***	**180***	**330***	60
			400	⑥	0.30	140	390	60

*rated data

Fan ordering information

Airflow direction → Airflow direction

Design	L (guard grille suction side) Ontop	L (without guard grille) Ontop	L (guard grille pressure side) Ontop	Q (without guard grille)	Q (guard grille pressure side)	H (guard grille pressure side) Flattop
	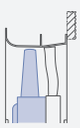				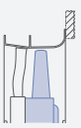	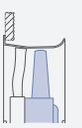
Type **Article no.**	**ZN091-NDL.6N.V7P2** **167291**	**ZN091-NDL.6N.V7P2** **165066**	**ZN091-NDL.6N.V7P2** **165067**	**ZN091-NDQ.6N.V7P2** **165071**	**ZN091-NDQ.6N.V7P2** **165072**	**ZN091-NDH.6N.V7P2** **165076**
Weight kg	44.50	40.90	42.80	44.40	46.30	42.50

ZAplus attachable on both sides.

Control technology

Frequency inverters Fcontrol 3~	Motor protection units 3~	Electronic voltage controllers 3~
		
Page 480	Page 518	Page 506

Design Q - ZAplus with adapter plate, without guard grille

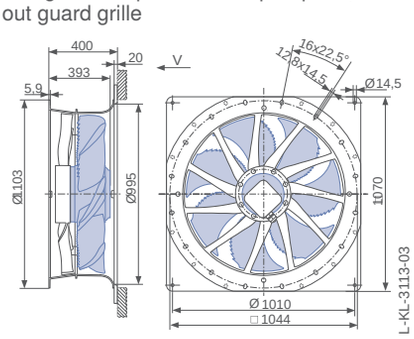

Design Q - ZAplus with adapter plate, guard grille pressure side

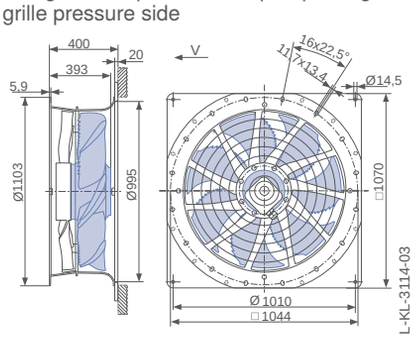

Design H - ZAplus Flattop, guard grille pressure side

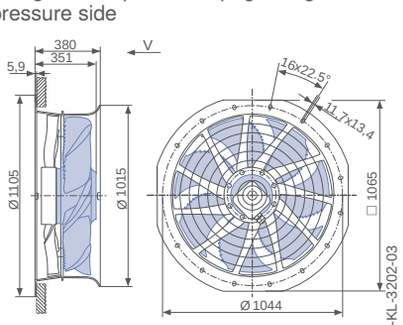

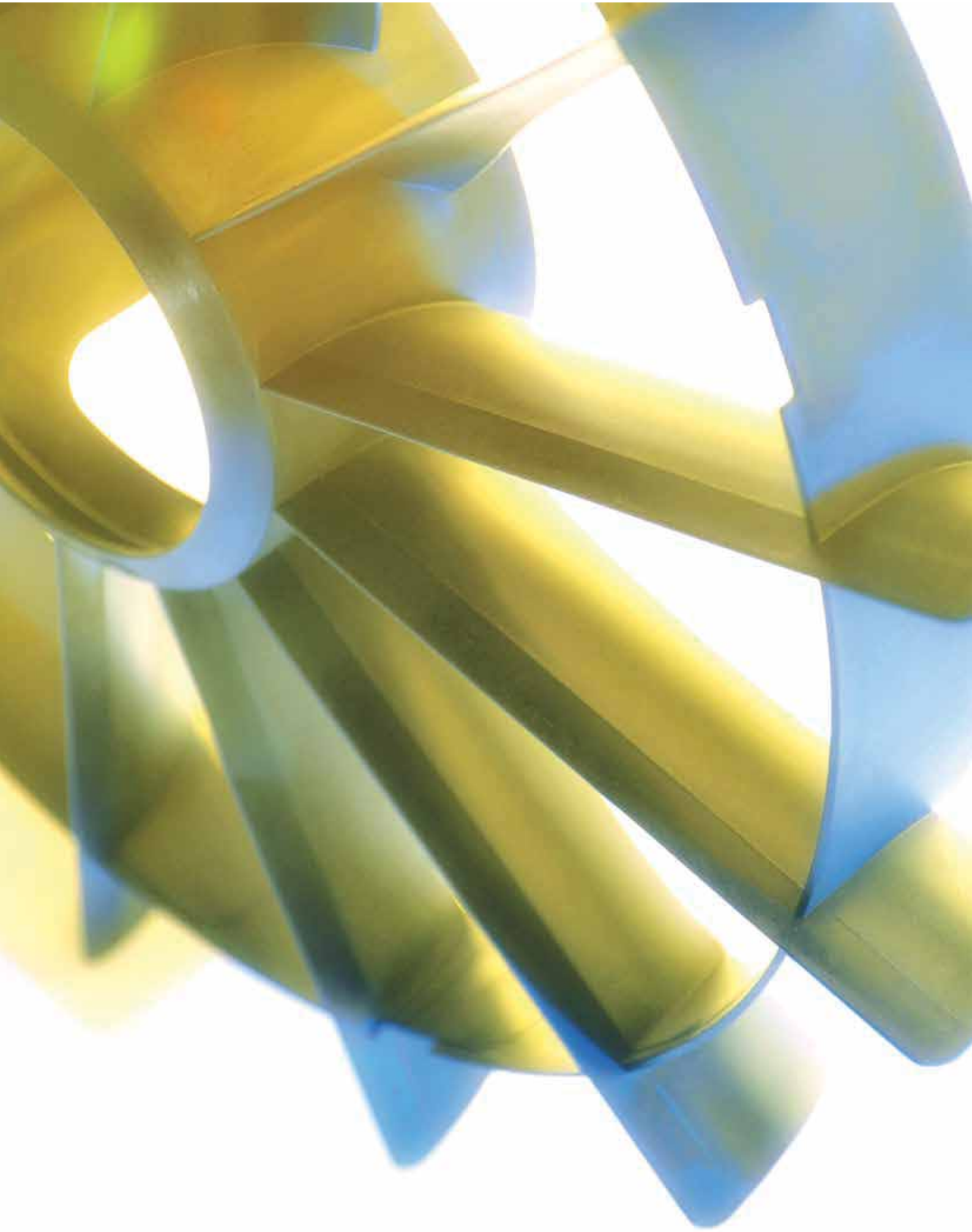

System components

Product overview

Guiding vane	Page 432
Guard grille	Page 434
ZAplus+	Page 438
Optimised sound emission with ZAplus+	Page 440
ZAplus Heater	Page 441
Backdraft fan shutter	Page 442
Service capacitor	Page 443
Capacitor junction box	Page 444
Terminal box K52 / K09	Page 445

Guiding vane

for airflow direction V and pressure side guard grille



Guiding vane

Guiding vane mounted on fan

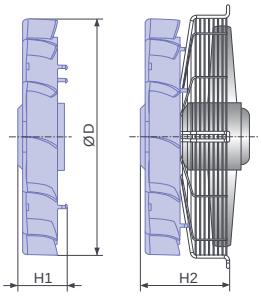

Description

Range: FE2owlet (see type key FN)
Application range: for improvement of the long flow-range behaviour
Applications: Evaporators, condensers, cold storage, etc.

Advantages:

- Increased throw distance
- Avoidance of “thermal short circuit”
- Minimal pressure losses
- Easy to connect
- Fast retrofitting

Special guiding vane

Material: Polyamide PA6 GF30, UL-listed
Permissible ambient temperature: -30 °C...70 °C
Mounting: Clip onto the frame support grate

Guiding vane								
for fan			for wire carrying grille		**Guiding vane**	Dimensions		
Motor	Size	Design	Type	Article no.	**Article no.**	ØD	H1	H2
	mm					mm	mm	mm
4_	450	K	K	00260180	**00291528**	479	101	179
	500	K	K	00260160	**00286705**	528	113	168
		K	K	00287445	**00291529**	530	101	190
6_	630	Q	S	00288513	**00288666**	671	118	183
	710	Q	I	00290635	**00291514**	715	115	178
	800	Q	I	00290636	**00291515**	805	115	176

Universal guiding vane

Material: Polyamide PA6 GF30, UL-listed
Permissible ambient temperature: -30 °C...70 °C
Mounting: Screwed on the frame support grate

Guiding vane			
for fan	**Guiding vane**	Dimensions	
Size	**Article no.**	ØD	H1
mm		mm	mm
450	**00369240**	479	120-135
500	**00369241**	530	120-135
630	**00369242**	671	140-155
710	**00369243**	714	114-134
800	**00369244**	805	114-134

Functional principle

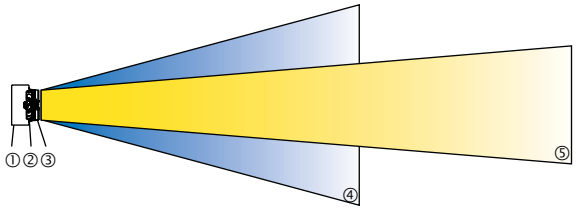

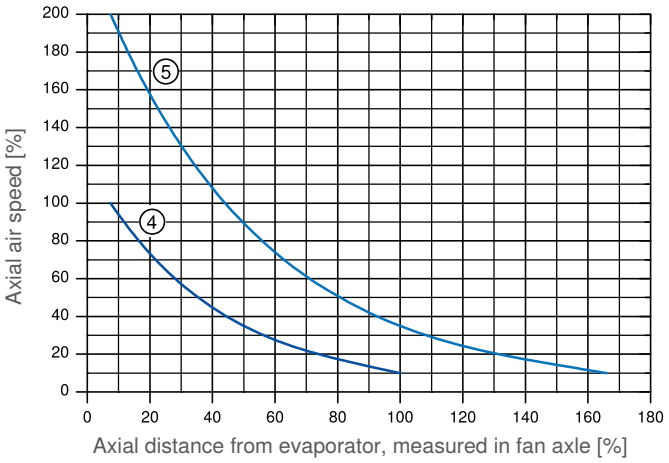

① Evaporator
② Fan
③ Guiding vane
④ without Guiding vane
⑤ with Guiding vane

Guard grille

on suction side, for design Q/L, air flow direction A

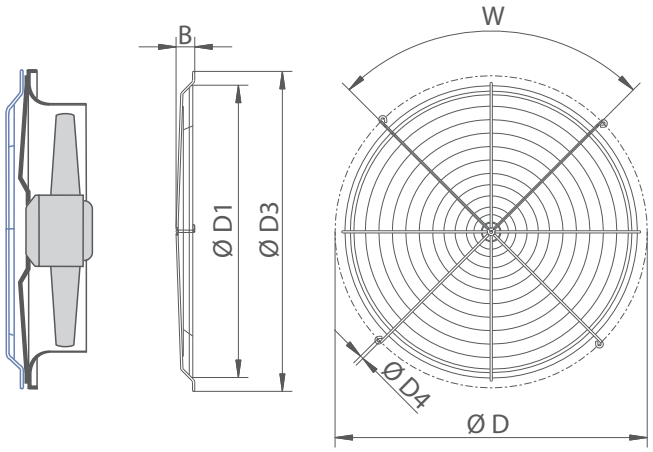

L-KL-2228

Guard grille on suction side							
Size mm	Article no.	B mm	D mm	D1 mm	D3 mm	D4 mm	W
710	00283714	50	835	782	856	9	4x90°
800	00283713	50	960	901	979	9	4x90°
910	00283570	56	1115	1030	1134	9	4x90°
1000	00284414	85	1140	1110	1161	9	4x90°
1250	00284523	105	1480	1405	1501	9	8x45°

Description
Material: Steel-wire
Coating: phosphated, powder-coated
Color: RAL 9005, black matt

on blower side, for design F, air flow direction A and V

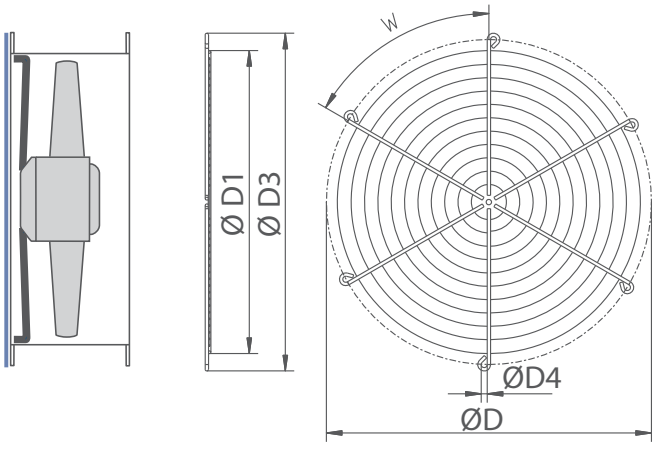

L-KL-2229

Guard grille on blower side						
Size mm	Article no.	D mm	D1 mm	D3 mm	D4 mm	W
315	00285790	356	334	375	9	4x90°
350	00285792	395	374	414	9	4x90°
400	00285798	438	414	461	9	6x60°
450	00285793	487	454	506	9	6x60°
500	00285794	541	514	560	9	6x60°
560	00285795	605	574	626.5	11.5	8x45°
630	00285796	674	634	695.5	11.5	8x45°
710	00285850	751	714	772.5	11.5	8x45°
800	00284896	837	794	858.5	11.5	8x45°
900	00284510	934	891	958	11.5	8x45°
1000	00284511	1043	987	1067	11.5	8x45°
1120	00284512	1174	1123	1198	11.5	8x45°
1250	00284513	1311	1251	1335	11.5	8x45°

Description
Material: Steel-wire
Coating: phosphated, powder-coated
Color: RAL 9005, black matt

Guard grille

on blower side, for design Q/L, air flow direction A

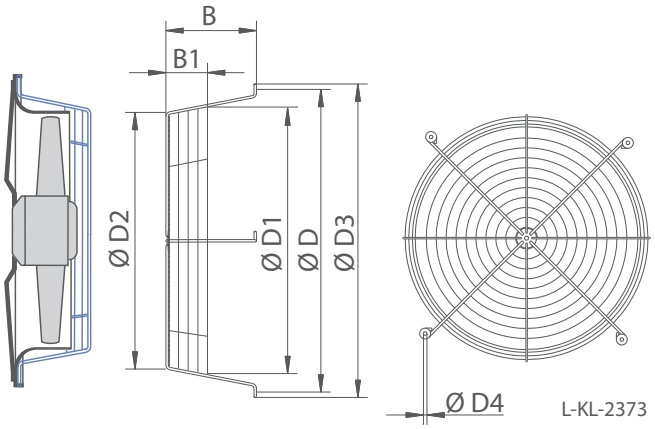

Guard grille on blower side								
Size mm	Article no.	B mm	B1 mm	D mm	D1 mm	D2 mm	D3 mm	D4 mm
350	00286215	154	95	422	380	387	444	7
400	00287758	145	64	500	431	424	522	7
450	00286217	187	131	560	487	455	582	7
500	00286218	187	83	615	539	522	637	7
560	00286202	223	120	658	597	569	680	7
630	00286219	231	127	720	682	677	724	7
710	00286201	295	152	835	743	701	857	9.5

Description
Material: Steel-wire
Coating: phosphated, powder-coated
Color: RAL 9005, black matt

on blower side, for design W, air flow direction A

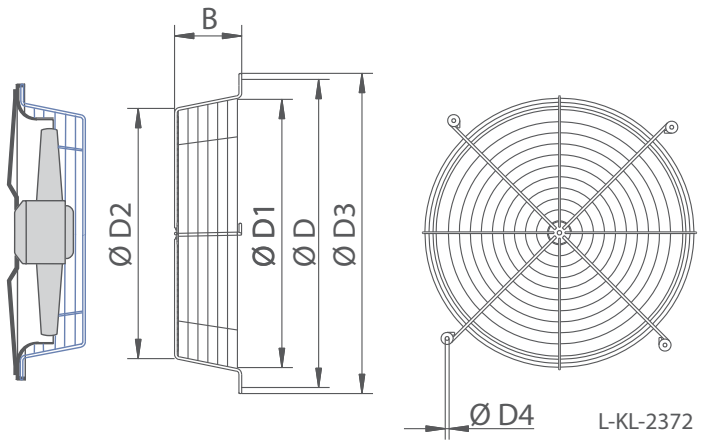

Guard grille on blower side							
Size mm	Article no.	B mm	D mm	D1 mm	D2 mm	D3 mm	D4 mm
350	00286216	112	420	373	387	442	7
420	00286407	122	560	487	456	582	7
560	00286203	134	658	597	570	680	7
650	00286204	156	750	682	677	772	7

Description
Material: Steel-wire
Coating: phosphated, powder-coated
Color: RAL 9005, black matt

Guard grille for ZAplus

Description

Material: Steel-wire
Coating: phosphated, powder-coated
Color: RAL 9005, black matt

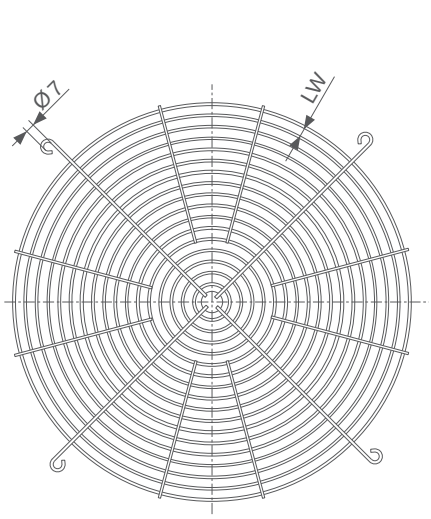

L-KL-3370

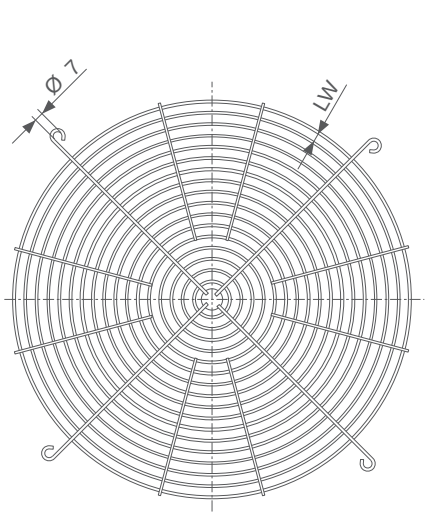

L-KL-3371

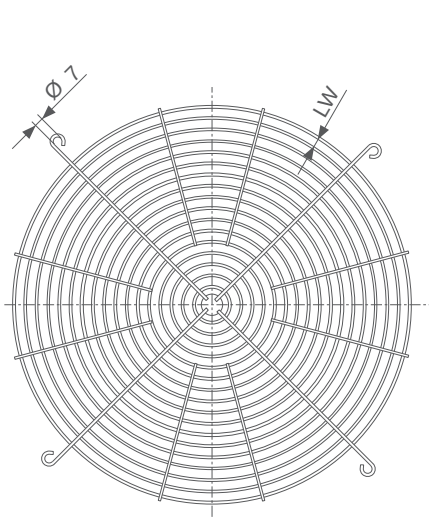

L-KL-3372

Guard grille on suction side

Motor size	Size	Article no.	Drawing	E1 mm	H mm	D1 mm	LW mm
2_	450	00700873	3370	510	8	475	7.5
4_	450	00700874	3372	510	53	475	7.5
	500	00703180	3372	560	47	529	7.5
	630	00700576	3370	720	8	670	7.5
4M	630	00703463	3372	720	68	677	7.5
6_	630	00703463	3372	720	68	677	7.5
	910	00700894	3372	1000	58	945	7.5
6K	800	00700163	3370	900	8	840	7.5
6N	800	00702900	3372	900	27	840	7.5
7_	910	00700894	3372	1000	58	945	7.5
BD	450	00700873	3370	510	8	475	7.5
	500	00703463	3372	560	47	529	7.5
	630	00700576	3370	720	8	670	7.5
	710	00289811	3370	840	8	790	7.5
D_	500	00703180	3372	560	47	529	7.5
	630	00700576	3370	720	8	670	7.5
	710	00289811	3370	840	8	790	7.5
	800	00700163	3370	900	8	840	7.5
	910	00700893	3370	1000	8	938	7.5
G_	630	00703463	3372	720	68	677	7.5
	710	00702509	3372	840	53	790	7.5
	800	00700163	3370	900	8	840	7.5
	910	00700893	3370	1000	8	938	7.5

Guard grille on pressure side

Motor size	Size	Article no.	Drawing	E1 mm	H mm	D1 mm	LW mm
2_	450	00700872	3371	510	8	460	19.5
4_	450	00700872	3371	510	8	460	19.5
	500	00299801	3372	560	47	535	7.5
	630	00700182	3371	720	8	635	19.5
6_	630	00700182	3371	720	8	635	19.5
	800	00299071	3371	860	8	810	19.5
	910	00700575	3371	1000	8	910	19.5
7_	910	00700575	3371	1000	8	910	19.5
BD	450	00700872	3371	510	8	460	19.5
	500	00299801	3372	560	47	535	7.5
	710	00701557	3371	780	7	710	19.5
D_	500	00299803	3372	560	24	513	7.5
	630	00700182	3371	720	8	635	19.5
	710	00701557	3371	780	7	710	19.5
	800	00299070	3370	860	8	810	8.5
	910	00700575	3371	1000	8	910	19.5
G_	630	00700182	3371	720	8	635	19.5
	710	00701557	3371	780	7	710	19.5
	800	00299071	3371	860	8	810	19.5
	910	00700575	3371	1000	8	910	19.5

Guard grille for ZAplus

Description

Material: Stainless steel 1.4301

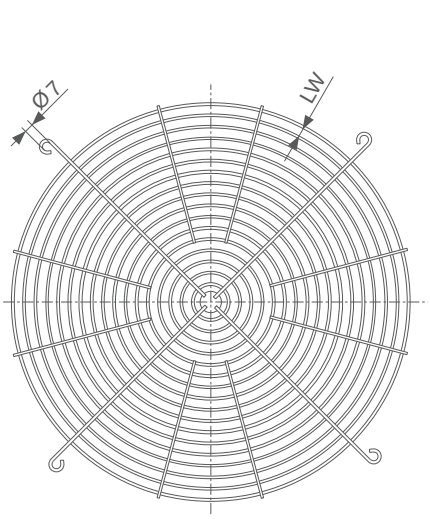

L-KL-3370

Guard grille on suction side							
Motor size	Size	**Article no.**	Draw-ing	E1 mm	H mm	D1 mm	LW mm
4_/B_/D_	500	**00702457**	3372	560	47	529	7.5
6_/B_/D_/G_	630	**00702461**	3372	720	68	677	7.5
6N/D_/G_	800	**00702902**	3372	900	47	840	7.5
6_/7_/D_/G_	910	**00702460**	3372	1000	58	945	7.5

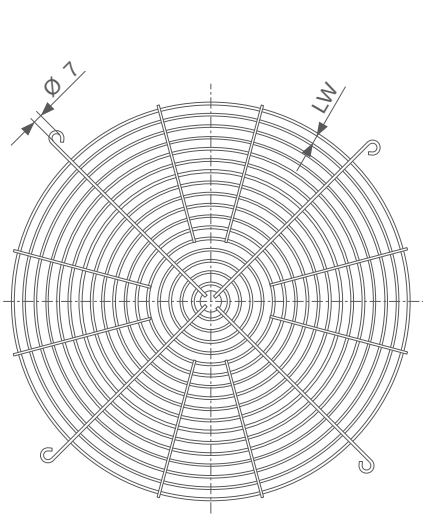

L-KL-3371

Guard grille on pressure side							
Motor size	Size	**Article no.**	Draw-ing	D1 mm	H mm	D1 mm	LW mm
2_/4_/B_	450	**00702458**	3370	510	8	460	19.5
4_/B_/D_	500	**00702455**	3372	560	47	535	7.5
4. 6, D, G	630	**00702459**	3370	720	8	635	19.5
D	800	**00702424**	3371	860	8.5	810	11.5
6_/G_	800	**00702453**	3371	860	8	810	19.5
6_/7_/D_/G_	910	**00702462**	3370	1000	8	910	19.5

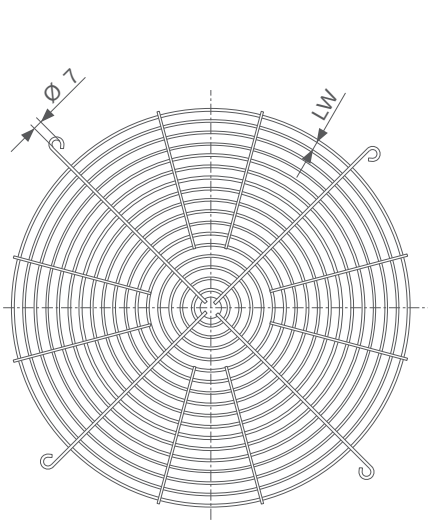

L-KL-3372

ZAplus+

Diffusor on ZAplus for greater air flow rate in the lower pressure range



Increase in air flow rate ZAplus+ vs ZAplus

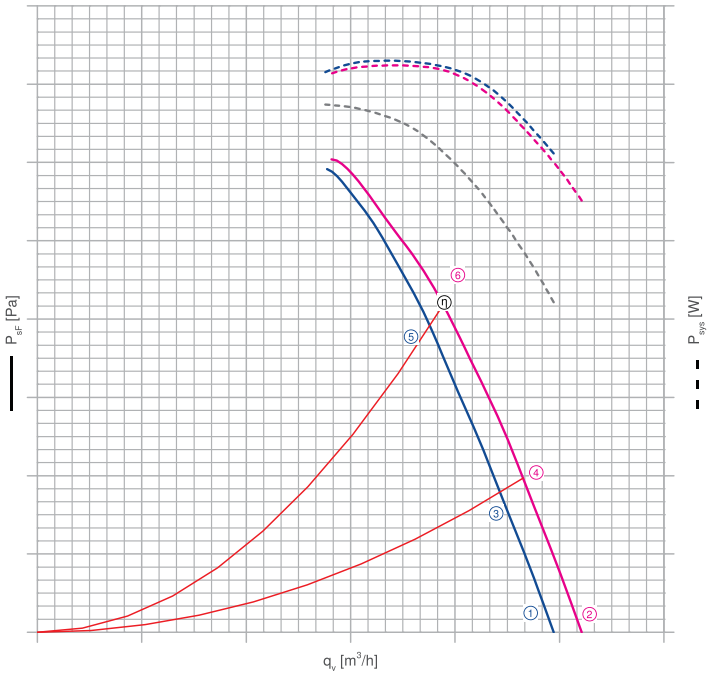

Fan characteristic with ZAplus
Fan characteristic with ZAplus+
Power consumption of fan with ZAplus
Power consumption of fan with ZAplus+
Power consumption with ZAplus+ at identical air flow as ZAplus

Description

Applications with low pressure losses (including Microchannel)
Sizes: ZN050, ZN063, ZN080 and ZN091
Diffusor: Black-coated metal sheet
Guard grille: Black-coated steel wire
Authorised ambient temperature: -50°C...80°C
Assembly: Screwed to ZAplus

The installation kit includes:

2 diffusor halves
1 guard grille
1 fastening kit
1 assembly instructions

Advantages:

- Noise level improved by up to 4.5 dB(A)
- Acoustic directivity
- Increased air handling capacity
- Easy to retrofit
- Energy optimisation
- Lower operating costs
- 100% recyclable
- Complies with ErP 2015

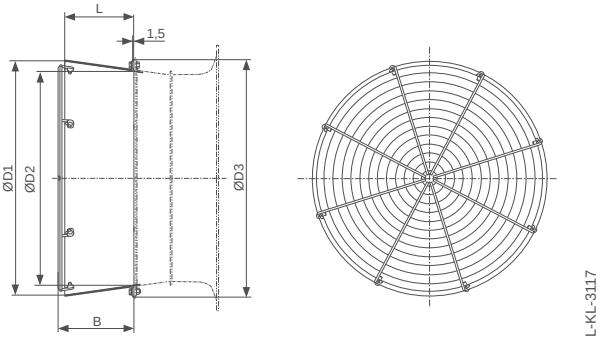

ZAplus+							
Size	Article no.	∅ D1	∅ D2	∅ D3	B	L	Weight
		mm	mm	mm	mm	mm	kg
500	00701319	576	528	579	186	170	5.0
630	00701321	725	675	800	197	180	6.8
800	00701323	908	835	935	197	180	8.6
910	00702652	1006	955	1075	197	180	9.7

Improvement to ZAplus through ZAplus+

	Operating point		q_v increase*	Energy saving*	Energy saving**
			%	%	%
ZN050-6I_.BD.V7P2	①	②	7.0	14.5	30.5
	③	④	6.0	-	21.5
	⑤	⑥	4.0	-	11.5
ZN050-ZI_.DC.V7P2	①	②	9.0	14.5	34.0
	③	④	6.5	-	22.5
	⑤	⑥	4.0	-	14.5
ZN050-VD_.4I.V7P1	①	②	8.5	9.0	28.5
	③	④	5.5	-	18.0
	⑤	⑥	3.0	-	10.0
ZN050-6E_.4F.V7P1	①	②	8.0	6.5	25.5
	③	④	5.5	-	16.5
	⑤	⑥	3.5	-	10.0
ZN050-AD_.4C.V7P1	①	②	8.0	7.0	26.0
	③	④	7.5	-	22.0
	⑤	⑥	4.0	-	12.0
ZN063-6I_.BD.V7P2	①	②	2.5	-	7.0
	③	④	4.0	-	9.5
	⑤	⑥	1.5	-	-
ZN063-ZI_.DG.V7P2	①	②	2.0	3.5	9.5
	③	④	2.5	-	10.0
	⑤	⑥	1.0	-	3.5
ZN063-ZI_.GL.V7P3	①	②	4.5	5.5	16.5
	③	④	1.0	-	6.5
	⑤	⑥	0.5	-	1.5
ZN063-VD_.6N.V7P4	①	②	3.0	0.5	9.5
	③	④	1.0	-	3.0
	⑤	⑥	1.5	-	3.5
ZN063-SD_.4I.V7P1	①	②	1.0	1.0	4.5
	③	④	1.0	-	4.5
	⑤	⑥	1.0	-	3.5
ZN063-6E_.4M.V7P1	①	②	1.5	2.0	6.5
	③	④	1.5	-	6.0
	⑤	⑥	1.0	-	4.5
ZN063-AD_.4I.V7P1	①	②	1.0	-	3.0
	③	④	1.0	-	2.5
	⑤	⑥	1.0	-	3.0
ZN080-ZI_.DG.V5P4	①	②	4.5	8.5	19.5
	③	④	3.5	-	13.5
	⑤	⑥	2.5	-	7.5
ZN080-ZI_.GG.V7P3	①	②	4.5	7.0	18.0
	③	④	3.0	-	10.0
	⑤	⑥	1.0	-	1.5
ZN080-ZI_.GL.V7P3	①	②	4.5	6.0	18.0
	③	④	3.0	-	8.5
	⑤	⑥	1.5	-	2.0
ZN080-SD_.6N.V7P2	①	②	4.5	4.0	15.5
	③	④	2.5	-	11.5
	⑤	⑥	-	-	-
ZN080-AD_.6N.V7P2	①	②	3.5	6.5	16.0
	③	④	3.0	-	11.5
	⑤	⑥	-	-	-
ZN080-ND_.6K.V7P2	①	②	5.5	2.5	17.0
	③	④	1.0	-	8.0
	⑤	⑥	0.5	-	3.5
ZN091-ZI_.DL.V5P1	①	②	2.1	2.2	8.0
	③	④	1.5	-	5.1
	⑤	⑥	1.0	-	2.1

* Comparison at identical speed/ ** identical air flow - using AC motors with Fcontrol

Optimized Sound Emission with ZAplus+

Acoustic directivity = reduced centrifugal sound emission

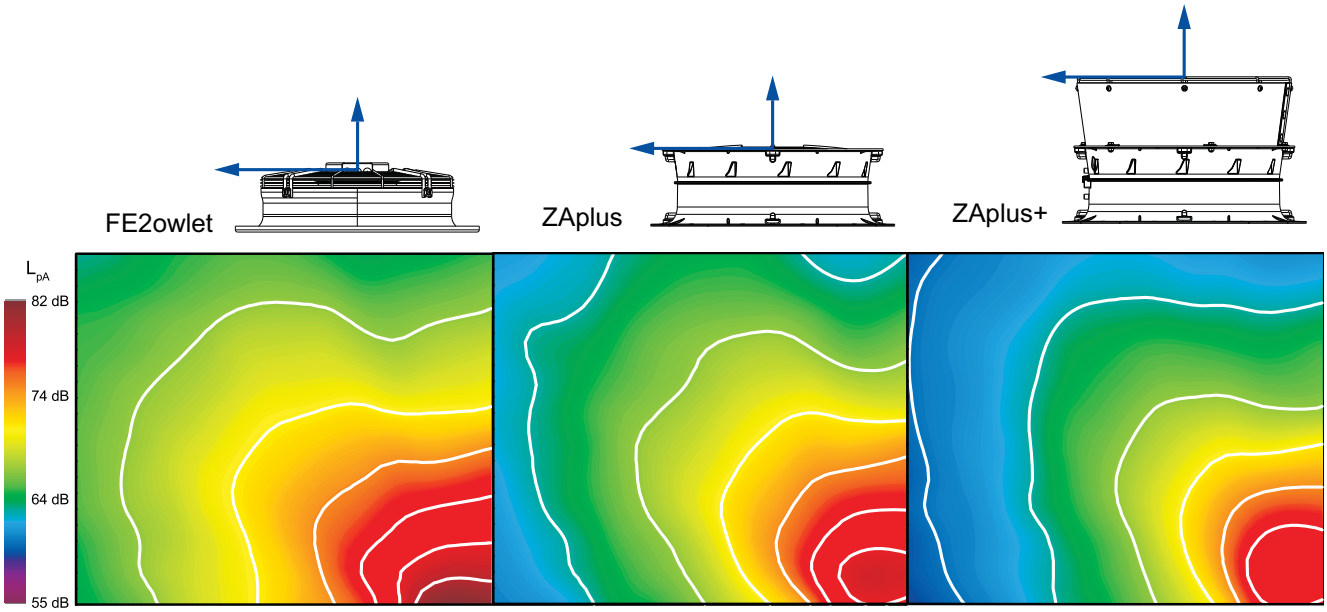

Sound emission with ZAplus mainly vertical. Lower noise for your neighbour

ZAplus Heater



Technical characteristics

Aluminium Heater
Rated voltage U_N: 1 200-250 V
Rated frequency f_N: 50/60 Hz
Approval CE
1 m cold tail insulated
60° C thermostat
120° C safety limiter
Adhesive backside on the whole surface
Additional adhesive over perimeter length for legendary fixing on itself
This way of fixing warrenties a better contact and so better heat exchange efficiency
As an option there is an isolation jacket available. Herewith the loss of heat can be minimized.

ZAplus Heater			
Size	Power W	**ZAplus Heater UL-certified**	**Isolation jacket**
450	210	**00702486**	**00702492**
500	180	**00702487**	**00702493**
630	280	**00702488**	**00702494**
710	400	**00702489**	**00702495**
800	470	**00702490**	**00702496**
910	550	**00702491**	**00702497**

Backdraft fan shutter

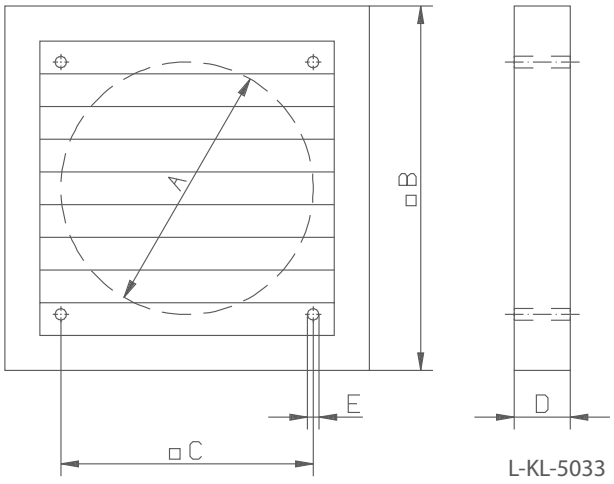

Description

Made of shock-proof and UV-resistant plastic
Colour: light grey.
Package includes mounting fixtures.
Type SVK1000: Delivery in three pieces for self assembling.
Larger shutters available on request.

Backdraft fan shutter

Article no.	Type	A mm	B mm	C mm	D mm	E mm
00234330	SVK315	310	346	276	26	5
00234340	SVK350	360	397	310	26	5
00234350	SVK400	422	462	366	26	5
00234360	SVK450	462	501	395	31	5
00234370	SVK500	505	548	443	31	5
00234380	SVK560	563	603	520	28	5
00244980	SVK630	655	696	628	31	5
00236390	SVK710	720	760	692	40	5
00264387	SVK800	800	840	772	40	5
00264388	SVK1000	1000	1040	972	40	5

Service capacitor

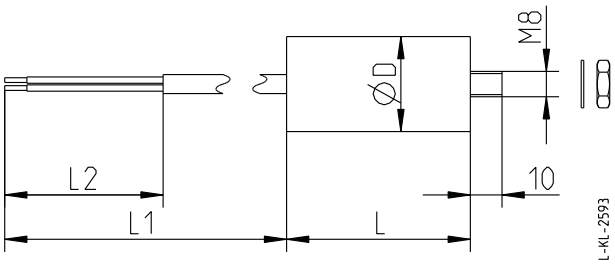

Description

Material: plastic housing
Wiring: AWG18 or AWG20
Max. Voltage: Umax = 400V
Ambient temperature: -25 °C to +85 °C

Service capacitor					
Capacity (µF)	**Article no.**	D mm	L mm	L1 mm	L2 mm
1,0	**02006926**	26	53	350	50
1,5	**02006927**	25	57	180	50
2,0	**02006930**	25	57	350	50
2,5	**02006931**	25	57	350	50
3,0	**02006932**	26	53	350	50
3,5	**02011670**	30	57	210	210
4,0	**02006933**	25	71	350	50
5,0	**02006934**	30	58	350	50
6,0	**02006935**	30	72	350	50
7,0	**02006936**	30	78	350	50
8,0	**02006937**	30	98	350	50
10,0	**02006938**	35	71	350	50

Capacitor junction box

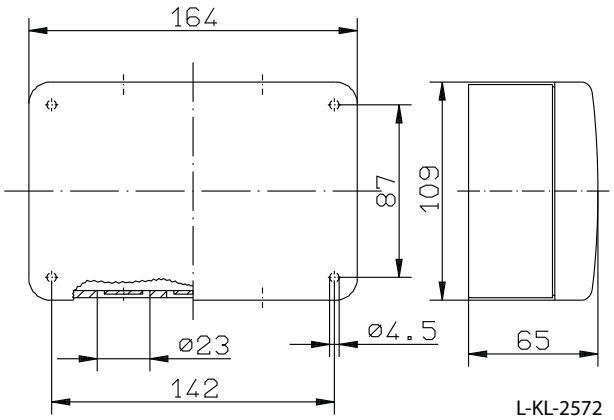

Description

Material:shock-proof polystyrene
Protection class: IP54
Color: light grey
Package includes pre-asembled capacitor, terminal strip, and two cable glands Pg16 with locking nut.

Capacitor junction box		
Article no.	**Type**	**C400 V (µ)**
00266159	GC1.5 / 400	1.5
00264073	GC2 / 400	2
00264065	GC3 / 400	3
00264066	GC4 / 400	4
00264067	GC5 / 400	5
00264069	GC6 / 400	6
00264068	GC8 / 400	8
00264071	GC10 / 400	10
00264072	GC12 / 400	12
00264074	GC14 / 400	14
00308236	GC16 / 400	16
00266154	GC_	without capacitor

Terminal box

K52

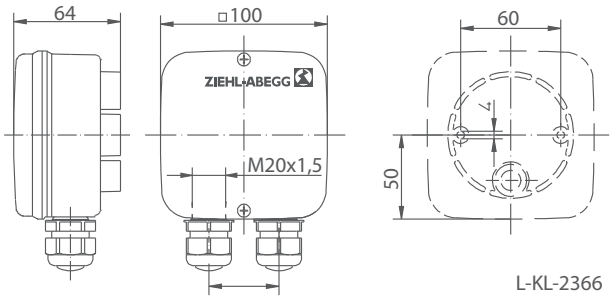

Description

Material: PC/ABS blend
Protection class: IP55
Max. rated voltage: 500 V

Available with European terminal strip 2.5 mm² with wire protection.
Capacitor for single phase AC up to 16 µF, 400 V can be fitted.
With two plastic cable glands M20 x 1.5 with seal.

Attention: Metall cable glands must not be used for plastic terminal boxes!
The hole in the bottom must be closed / sealed by the customer.

Article no.
00341564

K09

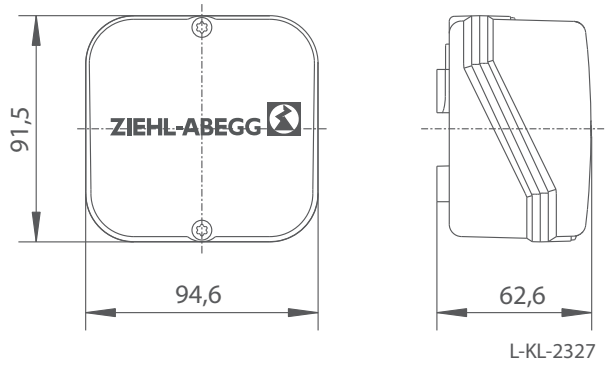

Description

Material: PC/ABS-Blend
Protection class: IP55
Max. rated voltage: 500 V

Available with European terminal strip 2.5 mm² with wire protection.
Capacitor for single phase AC up to 16 µF, 400 V can be fitted.
With two plastic cable glands M20 x 1.5 with seal.

Attention: Metal-cable glands must not be used for plastic terminal boxes!
The hole in the bottom must be closed / sealed by the customer.

Terminal box K09		
Article no.	**Capacitor µF/400V**	**Capacitor dimensions DxL mm**
00293197	1.0	25x58
00293198	1.5	25x58
00293199	2.0	25x58
00293200	2.5	25x58
00293201	3.0	25x58
00293910	3.5	30x58
00293202	4.0	25x72
00293203	5.0	30x58
00293204	6.0	30x72
00293205	7.0	30x72
00293206	8.0	35x72
00293207	10.0	35x72

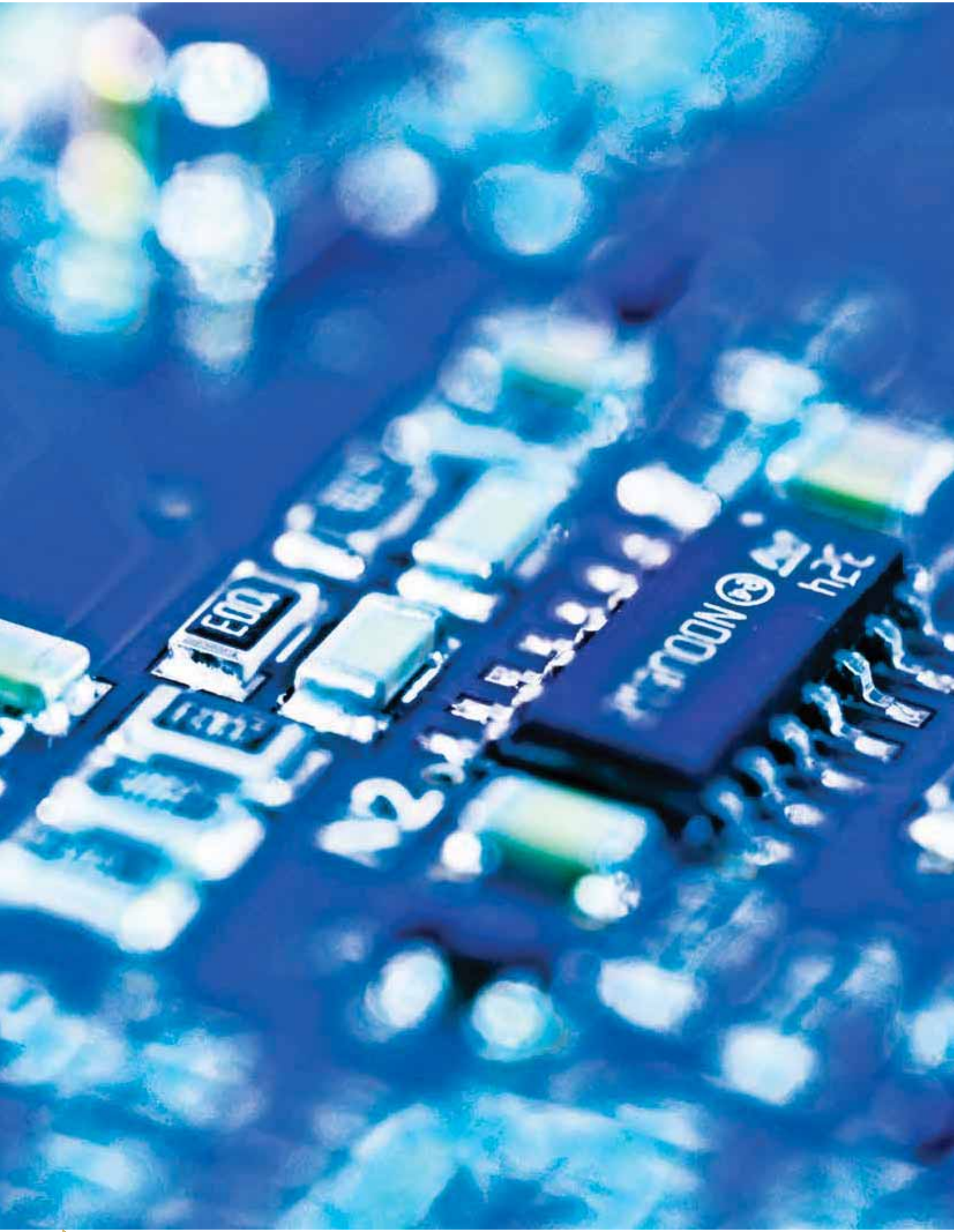



Control technology

Product overview

Selection criteria for control devices	Page 448
Options for speed control	Page 449
Motor protection concept	Page 450
UNIcon control modules	Page 452
System components for ECblue	Page 461
Add-on modules	Page 463
Display and operator terminals	Page 470
Hand held terminal	Page 472
Frequency inverters 1~	Page 474
Frequency inverters 3~	Page 482
Electronic voltage controllers 1~	Page 492
Electronic voltage controllers 3~	Page 506
Motor protection units	Page 518

Selection criteria for control devices

ZIEHL-ABEGG is the only fan manufacturer who develops its own methods for changing the speed of fans and produces the controllers for this:
- voltage controllers
- frequency inverters
- EC controllers

It is not general solutions which bring the decisive advantage in a special application. It is far more the criteria related to a system which are to be considered and which therefore lead to the best result. ZIEHL-ABEGG gives you neutral advice. The most suitable control procedure is chosen according to the system-related criteria. The following criteria are decisive for the selection of the right controller:
- control variable
- motor noises
- economy

Control variable

Basically it is a case of whether you want to implement an open control circuit (only one speed controller which operates based on a setting signal) or a closed control circuit (independent control to a physical variable, e.g. temperature, pressure, etc., in connection with appropriate sensors). In our program you will find controllers which operate only as speed controllers and versions which control processes independently, sometimes with extensive additional functions. We also supply the necessary sensors.

Sensors for process control:



Pressure sensor
MBG-30I



Temperature sensors
TF...



Air velocity sensors
MAL...



Pressure sensor
MPG... (gases)



Combined sensor for CO_2, humidity, temperature

Quiet motor operation

Depending on the application, different requirements are placed on low noise emission by the control method. For instance, due to its very low investment cost, electronic voltage control is very popular. However, electromagnetic excitation can arise due to the principle of phase-cut control, causing humming noises in the motors. As these excitations can be further amplified through resonances throughout the entire device, it is recommended to fall back on the control method (as early as in the planning stages), which does not cause electromagnetic excitation in the motors when these are to be used in noise-sensitive areas.

For 1~ alternating current fans, 1~ Fcontrol frequency inverters are available.
In the 3~ area, the noise filter GFD is available for voltage control devices as an accessory. Alternatively, these components can also be retrofitted. As another option, we recommend using the Fcontrol frequency inverter (3~) or EC technology as these systems work without the inference of electromagnetic motor noises.

Control devices for noiseless speed control:



Frequency inverter
Fcontrol



EC-controller Econtrol



ECblue fan with integrated EC controller

Cost effectiveness

In addition to the investment costs, it is absolutely essential to take the energy costs incurred during the service life into account for an asssement of the control system. Voltage control units are very favourable in terms of their investment costs for instance.
The Fcontrol frequency inverters or ECblue fans have clear advantages in comparison with voltage control.

Options for speed control

Speed control with frequency inverter

We specifically developed frequency inverters for trouble-free, quiet and cost-effective speed control of fans in parallel operation.

Fcontrol frequency inverter

Our Fcontrol frequency inverters with integrated, all pole effective sine filters enable parallel operation without placing restrictions on the cable lengths and without using shielded motor cables. The frequency inverters have stored, selectable operating modes, e. g. for refrigeration, air-conditioning and clean room technology along with agricultural applications.
Fcontrols can also be supplied for controlling pumps and for compressors.

The advantages of the Fcontrol frequency inverter:
- Speed control without electromagnetic motor noises
- Motors are not exposed to risk
- Operation without shielded motor cables
- No restriction during parallel operation of motors on the Fcontrol
- Very energy efficient
- The motor cable lengths are not restricted by Fcontrol
- Universal control functions are already integrated



Frequency inverter Fcontrol

Icontrol frequency inverters

Standard Icontrol frequency inverters are available for controlling internal rotor motors (IEC standard motors).

Speed control with voltage control devices

ZIEHL-ABEGG offers a comprehensive product range of electronic voltage control devices for continuously adjustable speed control of voltage controllable 3~ and 1~ fans. From simple devices (control through potentiometer) up to multifunction devices with display can be used for numerous applications. Multifunction devices have selectable operating modes already stored, e.g. for refrigeration, air-conditioning, clean room technology and even for agricultural applications.

Since when using the principle of phase-cut control electromagnetic noises can arise in the motors, we recommend the Fcontrol frequency inverter for noise-sensitive applications.

The advantages of electronic voltage control:
- Reasonably priced investment
- Universal control functions are already integrated

Important when selecting devices:
A voltage drop can lead to an increase of the current consumption on the motor. Please take this into consideration with a current reserve when designing voltage control devices. In this connection please note the technical data of the fans, especially regarding the statement of ΔI.



Basic 1~ voltage control device



Universal 3~ voltage control device

Speed control with transformers

Voltage controllable fans can have their speed changed by using transformers. For this purpose, we supply individual transformers (e.g. installation in switch cabinets) and complete transformer-based controllers with 5-step switch with various equipment:
- Control devices with and without integrated motor protection function
- Control devices with additional contacts and additional functions

The advantages of transformer-based speed control:
- Simple, robust technology
- No electromagnetic motor noises



Transformer-based 5-stage control devices for 1~ and 3~

Motor protection concept

The majority of ZIEHL-ABEGG external rotor motors (excluding ex-motors) are equipped with "TB" thermostats.
Standard protective switches or bi-metal actuators in the motor feed line work dependent of current and thus offer only incomplete protection as the current does not allow conclusions to be made about the motor winding temperature under all conditions.
In contrast, thermostats are bimetal switches embedded in the motor winding and they can react directly to the motor's winding temperature. They open an electrical contact, as soon as their nominal switch temperature (NST) is attained.



Thermal contact

Fans can be securely protected by ZIEHL-ABEGG motor protection devices. Especially when they are

- speed controlled by voltage,
- operated with excessive switching frequency,
- when they are stalled,
- or exposed to high ambient temperatures.

Thermostats must be connected in the control circuit so that during a malfunction the fans are not independently reconnected after cooling off. ZIEHL-ABEGG devices meet these conditions. Mutual protection of several motors is possible with one protection device. In order to do this, the temperature protectors of the individual motors have to be connected in series. Please pay attention to the fact that all motors are disconnected at the same time in case of a temperature failure in a single motor. In real life applications, motors are grouped, so in case one moror fails it is still possible to run in emergency mode with reduced power.
To ensure optimum motor protection we provide motor protection units in various designs.

Motor protection units for 3~ motors

The STDT motor protection units for 3~ motors combine several functions:
The motor is primarily protected by "TB" thermostat monitoring. This ensures direct monitoring of the winding temperature. On top of that, the STDT has an integrated overcurrent release that protects the lead to the motor from overcurrent. This feature - plus the integrated double terminals- allow the STDT to be used like a "current distribution" of sorts.



Motor protection units and system components

Application example with 3 ~ motor protection units as "current distribution"

Network or control devices output

Single fans or groups of fans protected by thermostats

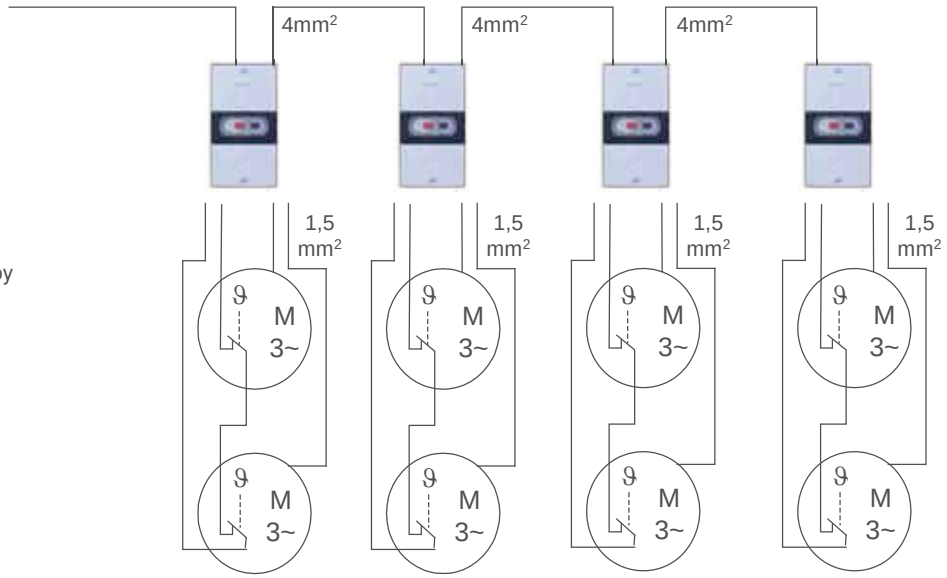

Motor protection units for 1~ motors

In the 1~ motor protection units, it is intended that each motor is allocated one motor protection device. Motor protection is also carried out using “TB“ thermostat monitoring.

Monitor unit for thermistors

Our U-EK monitor device is available for monitoring “TP“ thermistors, which are also approved for monitoring Ex-protected motors (ATEX approval).

Motor protection and switchgear

For speed selecting motors in which the motor windings are intended for this, we supply the switchgear with integrated monitoring functions for the “TB“ thermostats.



Monitoring device U-EK230E for thermistor

Control modules

UNIcon universal control module (with MODBUS Master function)



All ZIEHL-ABEGG sensors can be combined with the UNIcon CXE/AV(E) universal control module. The actual value measured at the sensor is compared with the setpoint. This results in the 0-10 V output signal. Two 0-10 V outputs are integrated. These serve to activate EC fans, frequency inverters or other devices. Optionally, connected field devices (frequency inverters/EC fans with plugged MODBUS add-on module) can be activated by the integrated MODBUS-RTU interface (MODBUS Master function). Groups of frequency inverters or ECblue fans can be conveniently addressed quickly and automatically. The device also contains two separate control circuits, a real time clock and timer functions. UNIcon universal control modules are especially suitable for the following applications: Refrigeration, air conditioning, general ventilation tasks, clean room technology. For typical applications in the areas mentioned, fast start-up is possible by selecting pre-programmed operating modes.

We supply special control modules for agriculture.

Input for sensors or speed settings through

0-10V — Setting of the desired speed through device or by external default, e.g. 0…10 V

0-30 0-50 bar — Connecting pressure sensors (refrigeration), e.g. type MBG.. sensors, measuring range 0...30 bar, 0...50 bar

°C — Connection of thermistors,
e. g. sensors type TF..
e. g. active sensor type MTG..

△Pa — Connecting differential pressure sensors (air conditioning), e.g. type DSG.. sensors, measuring range 0...6000 Pa, acquisition of volume flows up to 65000 m³/h

m / s — Connecting air velocity sensors, e.g. type MAL.. sensors, measuring range 0...1 m/s, 0...10 m/s

CO_2 % °C — Connecting additional sensors, e.g. combination sensors, CO_2, sensor signal 0...10 V / 0...20 mA / 4...20 mA

Connection diagram

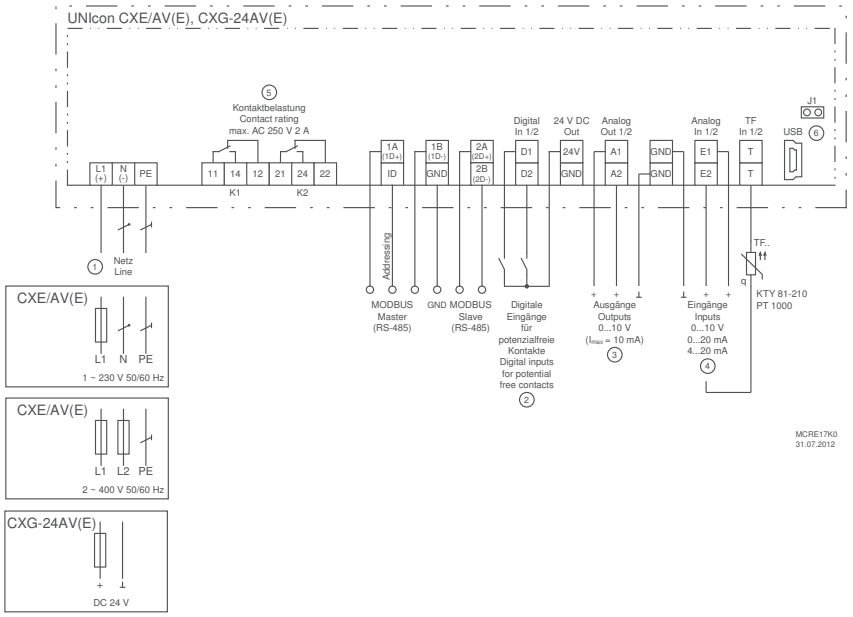

① Line
② Digital inputs for potential-free contacts
③ Outputs
④ Inputs
⑤ Contact load
⑥ Jumper for boot loader

Standard conformity

Interference emission according to EN 61000-6-3 (domestic)
Interference immunity according to EN 61000-6-2 (industrial)

Equipment/properties

Multifunction display with clear text display:
Different menu languages are selectable

Simple commissioning by operating modes:
Typical operating modes, e.g. for air-conditioning, refrigeration or ventilation technology can be selected.

Simple programmability:
e. g. setting of a minimum speed, limitation of the maximum speed, inversions and limits.
Setting, e.g. for 2-step mode

2 analog inputs for sensors or setting signals:
Analog input E1 and E2: Setting by operating modes or manually programmable, e.g. 0-10 V, 0-20 mA, 4-20 mA
Analog input E2: programmable, e.g. comparison with sensor 1, difference to sensor 1, average value formation, setpoint setting, setpoint adaptation (e.g. outside temperature-dependent)

2 digital inputs D1, D2:
Programmable, e.g. enable, switch over setpoint 1 or 2, switch over control or manual mode, switch over E1 or E2, control function reversal, output limitation, display of external fault

2 analog outputs for controlling external speed controllers, EC fans, other devices:
Analog output A1 and A2: Setting by operating modes or manually programmable, e.g. output signal proportional to modulation, output signal proportional to input signal, invertible, 10 V constant voltage, group control

2 digital outputs (relays) K1 and K2:
Setting by operating modes or manually programmable, e.g. operating indication, fault indication, limits, external fault at digital input, activation of external devices, e.g. heating, group control fans, etc.

2 interfaces RS485:
a) For connecting ZIEHL-ABEGG field devices with MODBUS RTU interface (e.g. field devices with integrated add-on module “AM-MODBUS”). With the possibility of automatic addressing of these field devices.
b) MODBUS Slave function of the UNIcon, for connection to a master control station (GLT).

Set protection/memory for settings:
Activation of set protection against unauthorised access, restoration of made settings

Event memory:
Query of occurred events, operating times etc.

Integrated real-time clock with timer:
The timer function behaves like a digital input, the desired function can be selected accordingly. Up to four switching times per day can be set for the desired function.

UNIcon universal control module

Line	Type	Article no.	Max. line fuse	Max. heat dissipation	Maximum ambient temperature	Protection class	Weight	Dimensions (W x H x D)
			A	W	°C		kg	mm
1~ 230V 50/60Hz	CXE/AV	320053	10	5	55	IP54	0.90	223 x 200 x 115
1~ 230V 50/60Hz	CXE/AVE	320056	10	5	55	IP00	0.65	166 x 106 x 55 mm / mounting depth: max. 105
2~ 400V 50/60Hz	CXE/AV	320055	10	5	55	IP54	0.90	223 x 200 x 115

Panel-mounting (front side IP54)

UNIcon universal control module

Line voltage	Type	Article no.	Max. line fuse	Max. heat dissipation	Maximum ambient temperature	Protection class	Weight	Dimensions (W x H x D)
			A	W	°C		kg	mm
	CXG-24AV	320057	10	5	55	IP54	0.75	223 x 200 x 115
24VDC	CXG-24AVE	320058	10	5	55	IP00	0.50	166 x 106 x 55 mm / mounting depth: max. 105

Panel-mounting (front side IP54)

Control modules

UNIcon sensor control module for pressure



The sensor control module for pressure measures and displays the pressure, for instance in refrigeration circuits. Depending on the desired setpoint and control range, the sensor control module generates
0-10 V to control the EC fan or, for example, a frequency inverter.

The sensor control module is supplied with 10 V DC from the fan or frequency inverter that it controls. No additional supply voltage is required.

Input for sensors or speed settings through

0-30
0-50
bar

Pressure sensor and control intelligence are combined in one device

Connection diagram

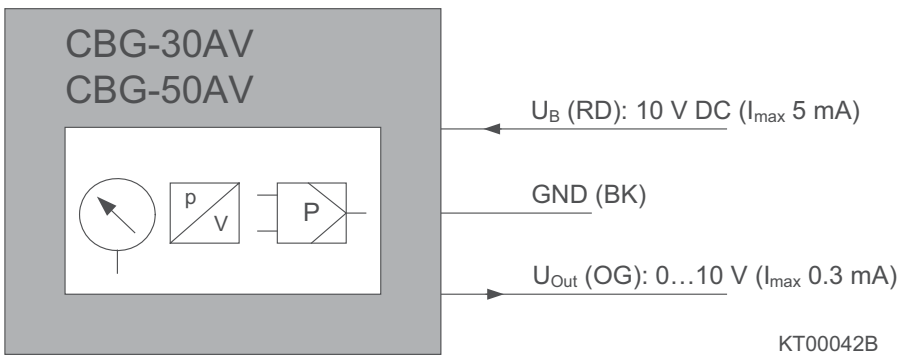

KT00042B
02.07.2009

Equipment/properties:

Analog pressure display for measured actual value:
Device versions for 0-30 bar and 0-50 bar are available
Display of the system pressure also without energy supply
A second scale shows the pressure in PSI

Setting of the desired system pressure by integrated potentiometer:
Version 0-30 bar: Setpoint 6-21 bar settable
Version 0-50 bar: Setpoint 10-35 bar settable

Setting of the desired control range by integrated potentiometer:
Version 0-30 bar: Control range 3-9 bar settable
Version 0-50 bar: Control range 5-15 bar settable

Extended, 3-wire cable approx. 2 m:
1 x output 0-10 V: for controlling EC fans, frequency inverters, other devices
1 x supply with 10 V DC: From the connected EC fan, frequency inverter, other device
1 x GND

Application/Function

The sensor control module is screwed through a female thread with the Schrader valve directly onto the refrigerant circuit on the condenser outlet.
Under the influence of pressure, an integrated elastic tube spring measuring element deforms. The measured pressure can be read immediately.
Through a Hall sensor, the deformation is transmitted non-contact and wear-free to the integrated control electronics. An automatic alignment with the measured value is made through the facility of being able to set the desired pressure in the plant with a potentiometer on the unit. The consequential 0-10 V signal controls connected EC fans, frequency inverters or other devices.

UNIcon sensor control module for pressure 10VDC						
Type	**Article no.**	Minimum ambient temperature °C	Maximum ambient temperature °C	Set value range	Protection class	Weight kg
CBG-30AV	**320039**	-20	60	6...21 bar	IP65	0.17
CBG-50AV	**320040**	-20	60	10...35 bar	IP65	0.17

UNIcon sensor control module for pressure in stainless steel 10VDC						
Type	**Article no.**	Minimum ambient temperature °C	Maximum ambient temperature °C	Set value range	Protection class	Weight kg
CBG-30AV (CrNi)	**320054**	-20	60	6...21 bar	IP65	0.17

Suitable for all refrigerants except NH_3

Control modules

UNIcon sensor control module for differential pressure/air flow (2nd edition)



The sensor control module for differential pressure and volume flow measures and indicates the pressure or, optionally, the volume flow in a ventilation system. The calculation of the volume flow is performed by entering the K-factor of the fan inlet ring.

Depending on the desired setpoint value and control range, the sensor control module generates 0-10 V to control the EC fan or e.g., a frequency inverter.

The sensor control module is supplied by the fan or frequency inverter which it controls, e.g., with 10-24 V DC. No additional supply voltage is necessary.

Input for sensors or speed settings through

△Pa — Pressure sensor and control intelligence are combined in one device

m³ — Air flow sensor (by input of K-factor) and control intelligence are combined in one device

Connection diagram

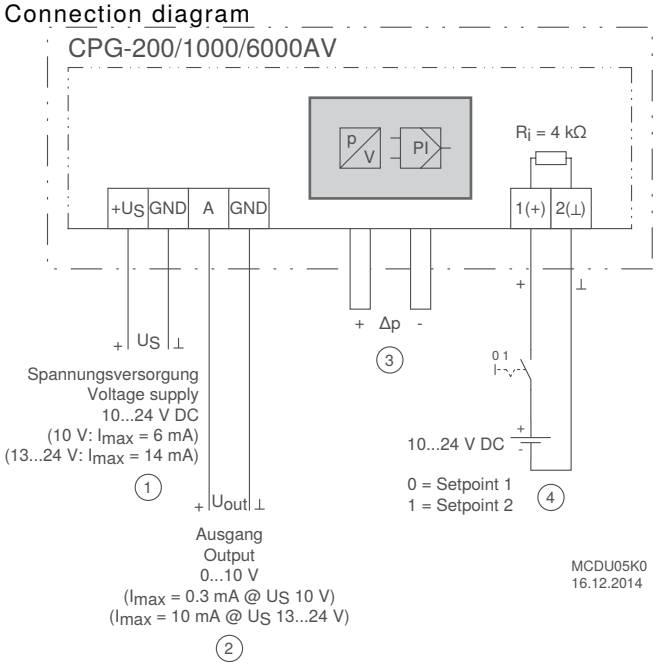

① Line
② Outout
③ Connection sockets
④ Voltage input for switch

Standard conformity

Interference emission according to EN 61000-6-3 (domestic)
Interference immunity according to EN 61000-6-2 (industrial)

Equipment/properties

Integrated display:
For pressure or volumetric air flow display and for programming
It is possible to switch over the display from SI units to Imperial units.
A zero point calibration of the integrated sensor is possible into the menu of the unit.

Simple commissioning by operating modes:
Operation as pressure or volumetric air flow sensor
Operation as pressure or volumetric air flow controller

Simple programmability by 3 buttons:
Selection of measuring range, input of setpoints (1/2),
Control range, K-factor for volumetric air flow determination,
minimum or maximum output signal.

Different measuring ranges can be selected depending on the version:
CPG-200AV: 0-50 / 100 / 150 / 200 Pa
CPG-1000AV: 0-200 / 300 / 500 / 1000 Pa
CPG-6000AV: 0-2000 / 3000 / 4000 / 6000 Pa
Maximum air flow measuring range: 65,000 m^3/h

Voltage input for switch over:
Setpoint 1 or 2

1 analog output:
For activation of EC fans, frequency inverters, other devices

Application/Function

The sensor control module is connected to the ventilation system via 2 pressure ports (pressure socket + and -).
The differential pressure registered on the ventilation system affects the sensor on a silicone membrane in the device. The deformation of the membrane is registered through a measuring element and transmitted to the integrated electronics. Function: Pressure rise on +, compared to pressure on - connection.
Optionally, the device can be operated as a pressure sensor, i.e., pressure indicator and proportional output signal 0-10 V corresponding to the set measurement range.
Optional operation as a volume flow sensor, i.e. volume flow (by entering the K-factor of the centrifugal fans) and 0-10 V proportional output signal corresponding to the set measurement range.
Optional operation as a control module for pressure or volume flow. The entered setpoint is compared to the actual value; the 0-10 V output signal results from that. That is used to trigger EC fans, frequency inverters or other devices.

UNIcon sensor control module for pressure
DC10...24

Type	Article no.	Minimum ambient temperature °C	Maximum ambient temperature °C	Protection class	Weight kg	Dimensions (W x H x D) mm
CPG-200AV	**320063**	-10	50	IP54	0.23	106.3 x 137 x 56
CPG-1000AV	**320064**	-10	50	IP54	0.23	106.3 x 137 x 56
CPG-6000AV	**320065**	-10	50	IP54	0.23	106.3 x 137 x 56

Dimensions with cable gland

Control modules

UNIcon temperature control module



The CTG temperature control module can be combined with various temperature sensors.

The actual value measured on the sensor is compared with the set-point. That produces the 0-10 V output signal. This is used to trigger EC fans, frequency inverters or other devices.

The control module is supplied with 10-24 V DC from the fan or frequency inverter it is triggering. No additional power supply necessary.

Optionally, the module can also be used as a temperature display. The 0-10 V output signal is then proportional to the set measurement range.

Input for sensors or speed settings through

°C

Connection of temperature sensors,
e.g. Type TF.. sensors, device measurement range -50...+150 °C

Connection diagram

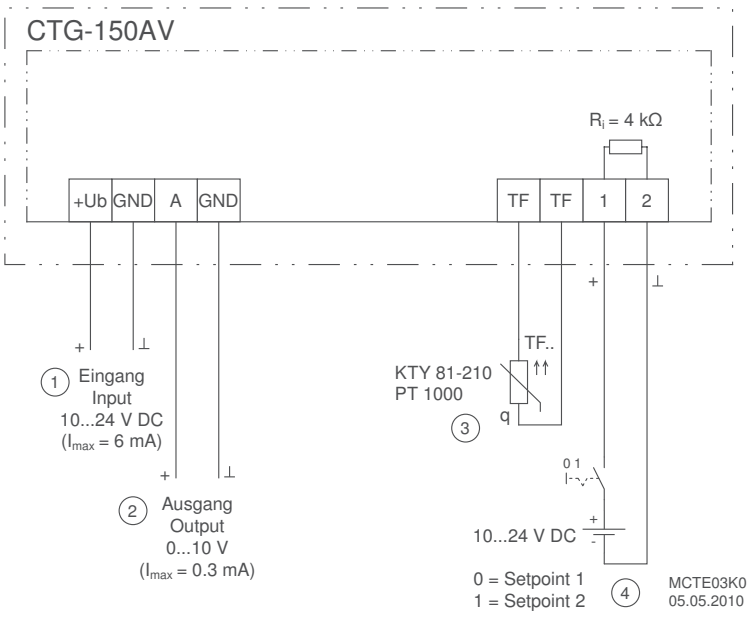

① Input
② Output
③ Temperature sensors
④ Voltage input for switch over

Standard conformity

Interference emission according to EN 61000-6-3 (domestic)
Interference immunity according to EN 61000-6-1 (domestic)

Equipment/Characteristics

Integrated display:
For temperature display and for programming

Simple commissioning of the operating modes:
Operation as temperature sensor or temperature controller

Easy to program using 3 buttons under the cover:
Select measurement range, enter setpoint (1/2), control range, Minimum or maximum output signal

Adjustable measurement range when using as temperature sensor:
-50 °C...+150 °C

Voltage input for switch over
Setpoint 1 or 2

1 analogue output:
To control EC fans, frequency inverters, other devices

UNIcon temperature control module
10...24VDC

Type	Article no.	Minimum ambient temperature °C	Maximum ambient temperature °C	Protection class	Weight kg	Dimensions (W x H x D) mm
CTG-150AV	320048	-10	50	IP54	0.20	114 x 108 x 56

Dimensions with cable gland

Control modules

UNIcon temperature control modul



The CTE temperature control module can be combined with various temperature sensors.
The actual value measured on the sensor is compared with the setpoint. That produces the 0-10 V output signal, which is used to control EC fans, frequency inverters or other devices.

Equipment/Characteristics

Integrated display:
Display of actual temperature

Integrated LED strip:
Display of 0-10 V modulation

Simple operation with rotary knob
Set the desired setpoint

Additional settings via controls under the cover:
Switch over control function (heating or cooling), setting control range, set minimum or maximum output signal

Input for sensors or speed settings through

Connecting temperature sensors,
e.g. Type TF.. sensors, device measurement range 0...+50°C

Standard conformity

Interference emission according to EN 61000-6-3 (domestic)
Interference immunity according to EN 61000-6-2 (industrial)

UNIcon sensor control module for pressure
1~ 230V Hz

Type	Article no.	Minimum ambient temperature °C	Maximum ambient temperature °C	Protection class	Weight kg	Dimensions (W x H x D) mm
CTE-50AV	320038	-10	50	IP54	0.37	125 x 85 x 68.7

Connection diagram

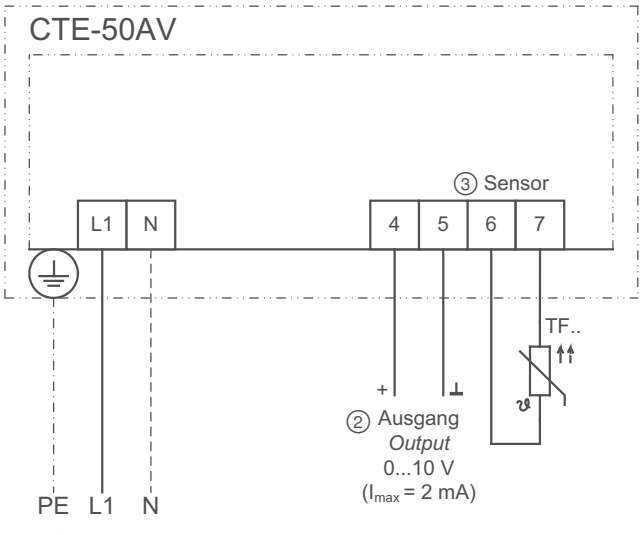

KT00041F
16.09.2008

① Line
② output
③ Sensor

Potentiometer





A speed setting can be made through energetic recovery to the input of the fan/controller by connecting the potentiometer to a supply voltage(10 V) provided by an EC fan or controller.
Alternatively, a setpoint (external setpoint) can be preset through the potentiometer.
Alternatively a setpoint setting (external setpoint) 0 - 10 V can be made with the potentiometer.

Equipment/Characteristics:

Rackmount version:
e.g. for installation in control cabinet doors
Axis length 50 mm, ∅ 6 mm
Included front plate: 40 x 40 mm
Included rotary knob

Design version in housing:
Surface mounting or mounting in existing flush receptacles. Device with additional switch contact.

Simple control via rotary knob
Set the desired resistance

Potentiometer

Type	Article no.	Mounting type	Setpoint range	Protection class	Weight kg	Dimensions (W x H x D) mm
Potentiometer 1K	**00153986**	Panel mounting	0...1kOhm	IP00	0.04	Shaft d 6 x 50
Potentiometer 10K	**00153989**	Panel mounting	0...10kOhm	IP00	0.04	Shaft d 6 x 50
Potentiometer 10K (IP54)	**380058**	Wall mounting	0...10kOhm	IP54	0.15	82 x 82 x 65

Connections

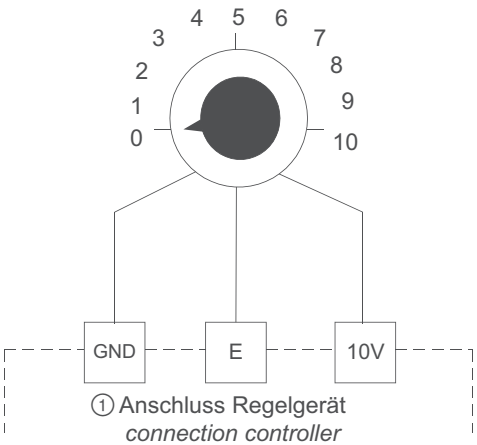

① Connection control unit

Add-on modules

AM-MODBUS (-W) for Basic Frequency inverter and ECblue



Pluggable add-on modules for function extension of the “Icontrol Basic” and “Fcontrol Basic” frequency inverters without integrated display as well as ECblue motors and fans.
With the AM-MODBUS/-W add-on modules, the devices integrated into MODBUS networks or the A-G-247NW operator terminal can be connected. Parameterization and data polling by radio (with AM-MODBUS-W) are optionally possible.
Whole groups of frequency inverters or ECblue motors and fans that are equipped with these AM-MODBUS add-on modules can be addressed quickly and automatically by a ZIEHL-ABEGG UNIcon control module with MODBUS-Master function. These devices are then controlled conveniently by the UNIcon “master” device.

Equipment/properties

2 x interface RS485:
For integration into a MODBUS RTU network (MODBUS Slave). With the possibility of automatic addressing by a UNIcon control module with MODBUS-Master function.

Add-on module - AM-MODBUS (-W)		
Type	**Article no.**	Weight kg
AM-MODBUS	**349045**	0.03
AM-MODBUS-W	**349050**	0.03

Connection diagram

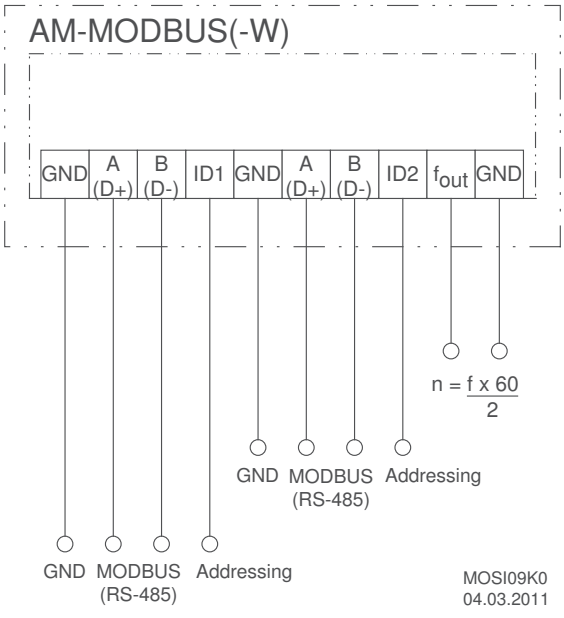

Add-on modules

AM-PREMIUM (-W) for Basic Frequency inverter and ECblue



Pluggable add-on modules for function extension of the “Icontrol Basic” and “Fcontrol Basic” frequency inverters without integrated display as well as ECblue motors and fans.
With the AM-PREMIUM/-W add-on modules, the devices can be functionally extended as a control unit. In addition, it is possible to link to MODBUS networks or connect operator terminals (A-G-247NW / AXG-1A / AXG-1AE). Radio parameterization and data polling (with AM-PREMIUM-W) is also possible as an option.

Input for sensors or speed settings through

0-10V — Setting of the desired speed through device or by external default, e.g. 0…10 V

0-30 0-50 bar — Connecting pressure sensors (refrigeration), e.g. type MBG.. sensors, measuring range 0...30 bar, 0...50 bar

°C — Connection of thermistors,
e. g. sensors type TF..
e. g. active sensor type MTG..

△Pa — Connecting differential pressure sensors (air conditioning), e.g. type DSG.. sensors, measuring range 0...6000 Pa, acquisition of volume flows up to 65000 m³/h

m / s — Connecting air velocity sensors, e.g. type MAL.. sensors, measuring range 0...1 m/s, 0...10 m/s

CO_2 % °C — Connecting additional sensors, e.g. combination sensors, CO_2, sensor signal 0...10 V / 0...20 mA / 4...20 mA

Connection diagram

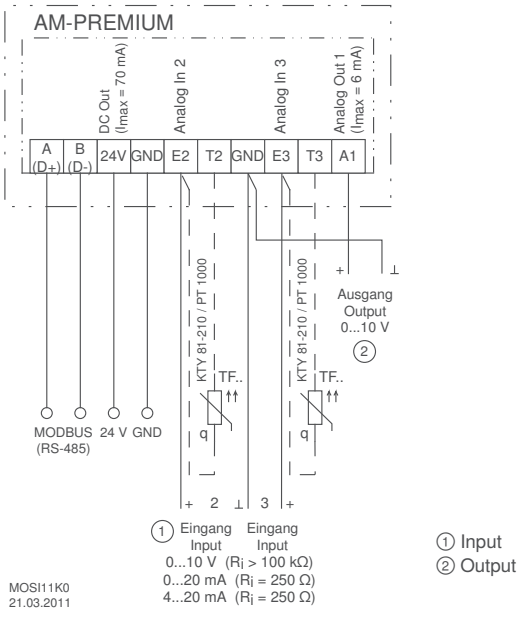

Equipment/properties

Simple start-up by operating modes:
When an operator terminal is connected to the AM-PREMIUM add-on module plugged into the frequency inverter (for AM-PREMIUM-W via radio), typical operating modes, e.g. for air conditioning, refrigerant or ventilation technology can be selected.

2 analog inputs for sensors or setting signals:
analog input E2 and E3: Setting by operating modes or manually programmable, e.g. 0-10 V, 0,20 mA, 4-20 mA
analog input E3: Programmable, e.g. comparison with sensor E2, difference to sensor E2, average value formation, setpoint setting, setpoint adaptation (e.g. outdoor temperature-dependent) connection of passive thermistors: On E2 and T2, E3 and T3.

1 analog output A1:
Setting by operating modes or manually programmable, e.g. output signal proportional to modulation, output signal proportional to input signal, invertible, 10 V constant voltage, group control.

Functional extension: Digital input D1 in the basic device:
programmable, e.g. enable, switch over setpoint 1 or 2, switch over control or manual mode, switch over E1 or E3, control function inversion, output limitation, external fault, reset, reversal of direction of rotation.

Functional extension: Digital output K1 in the basic device:
setting by operating modes or manually programmable, e.g. operating indication, fault indication, limits, external fault at digital input, activation of external devices, e.g. heating, shutters, group control fans, etc.

1 x interface RS485:
For linking to a MODBUS RTU network (MODBUS Slave). Manual addressing of the devices in the network

Add-on module AM-PREMIUM/-W		
Type	**Article no.**	Weight kg
AM-PREMIUM	**349046**	0.03
AM-PREMIUM-W	**349051**	0.04

Add-on modules

AM-CAN-OPEN for Basic Frequency inverter and ECblue



Pluggable add-on modules for a function extension of the “Icontrol Basic” and “Fcontrol Basic” frequency inverters without integrated display as well as ECblue motors and fans.
With the AM-CAN-OPEN add-on modules the devices can be integrated into CANopen networks.

An Electronic Datasheet (EDS file) is required for a device integration into the CANopen network.
This file is provided free of charge by our Control Engineering Support Department.

Equipment/properties

3 integrated LEDs
For status display and error message.

3 integrated rotary switches
2 rotary switches for manual address setting.
1 rotary switch for setting the baud rate

Add-on module - AM-CAN-OPEN		
Type	**Article no.**	Weight kg
AM-CAN-OPEN	**349064**	0.03

Connection diagram

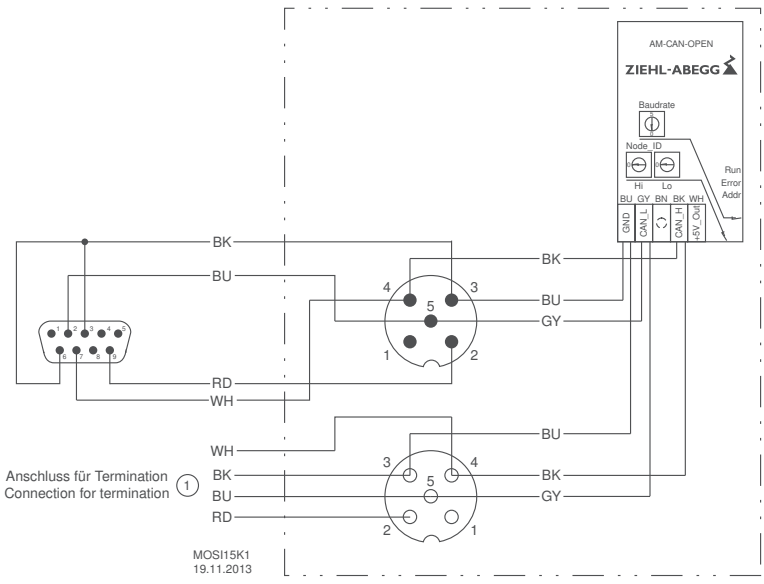

Add-on modules

AM-LON for Basic Frequency inverter and ECblue



Pluggable add-on modules for function extension of the “Icontrol Basic” and “Fcontrol Basic” frequency inverters without integrated display as well as ECblue motors and fans.
With AM-LON add-on modules the devices can be integrated into LON networks.

Add-on module - AM-LON		
Type	**Article no.**	Weight kg
AM-LON	**349049**	0.03

Connection diagram

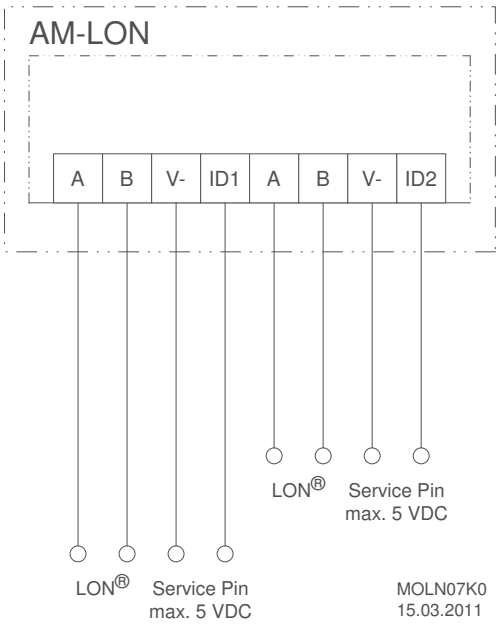

Add-on modules

AM-PROFIBUS for Basic Frequency inverter and ECblue



Pluggable add-on modules for function extension of the “Icontrol Basic” and “Fcontrol Basic” without integrated display as well as ECblue motors and fans.
With the AM-PROFIBUS add-on modules the devices can be integrated into PROFIBUS networks.
A device master data file (GSD file) is required for integration of the device into the PROFIBUS network. This is provided free by our Control Engineering Support Department.

Equipment/properties

3 integrated LEDs
For status display and error message.

2 integrated rotary switches
For manual address setting.

Automatic baud rate detection

Optionally available connectors
Plug with connecting wires 80 mm:
5-pole, M12, wall installation M16, Article No. 00161258
5-pole, M12, wall installation M20, Article No. 00161263
Socket with connecting wires 80 mm:
5-pole, M12, wall installation M16, Article No. 00161259
5-pole, M12, wall installation M20, Article No. 00161264

Add-on module AM-PROFIBUS		
Type	**Article no.**	Weight kg
AM-PROFIBUS	**349063**	0.03

Connection diagram

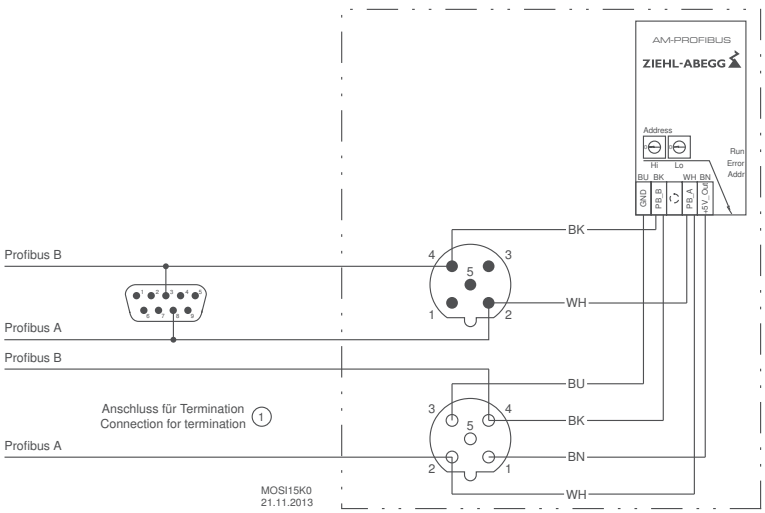

Display and operator terminal

For frequency inverter without integrated display and ECblue



Display and operator terminal for parameterization and operation of the basic frequency inverters “Icontrol Basic” and “Fcontrol Basic” as well as ECblue motors an fans.
The basic frequency inverters without integrated display and ECblue motors have a slot for the AM-PREMIUM add-on modules. By plugging the add-on modules, the AXG-1A(E) operator terminal or the A-G-247NW hand held terminal can be connected.

The display and operator terminal AXG-1A can be installed flexibly in plants or machines in the IP54 housing. Alternatively, a unit for control panel integration is available (AXG-1AE).
The + 24 V voltage supply comes from the frequency inverter, a separate mains supply is not required.

Connection diagram

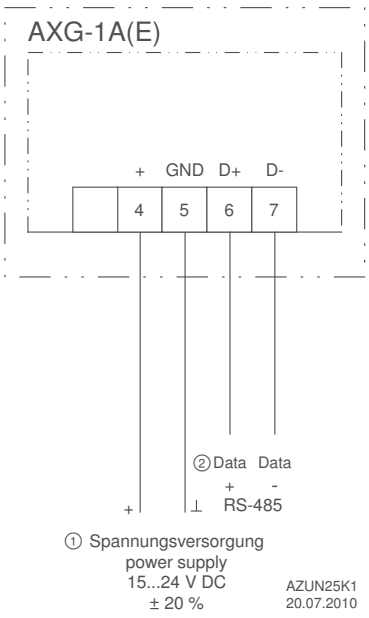

① Spannungsversorgung
power supply
15...24 V DC
± 20 %

AZUN25K1
20.07.2010

① Voltage supply
② Data

Technical data

- Voltage supply: 15-24 VDC (I_{max} 24 V: 50 mA / 14 V: 80mA)
- Maximum ambient temperature: + 40 °C

Equipment/properties

LC multi-function display with plain text display:
Different menu languages can be selected. Display of the connected frequency inverter menu.

1 interface RS485:
for connection to an AM-PREMIUM add-on module. Frequency inverters as well as ECblue motors and fans can be parameterized and operated with this.

Display and operator terminals 24VDC					
Type	**Article no.**	Mounting type	Protection class	Weight kg	Dimensions (W x H x D) mm
AXG-1A	**349034**	Wall mounting	IP54	0.60	166 x 160 x 87
AXG-1AE	**349008**	Panel mounting	IP54	0.55	166 x 106 x 57 mm / mounting depth: max. 75

Hand held terminal

Parameterization of the basic frequency inverters and ECblue



Hand held terminal for parameterization and operation of the “Icontrol Basic” and “Fcontrol Basic” frequency inverters as well as ECblue motors and fans.
The basic frequency inverters without integrated display and ECblue motors can be extended with AM-MODBUS or AM-PREMIUM add-on modules. The A-G-247NW operator terminal can be connected to this by plugging add-on modules.
When using the AM-MODBUS-W or AM-PREMIUM-W add-on modules, communication with this operator terminal can take place without cables, wirelessly, by radio.

The hand held terminal enables storing of data records and transmission of these to other devices.

Application example

Optional connection of the hand held terminal by cable (connection by interface RS485, MODBUS RTU) or radio communication.



Technical data

- External voltage supply:
  by plug power pack (1~ 230 V, 50/60 Hz)
- Internal voltage supply:
  3 x Mignon rechargeable batteries (NIMh 1.2 V)

Equipment/properties

LC multi-function display with plain text display:
Different menu languages can be selected

1 x Mini USB interface:
voltage supply / data transfer with a PC

1 x interface RS485:
for connection to an AM-MODBUS or AM-Premium add-on module. Frequency inverters, ECblue motors and fans can be parameterized and operated with this. It is possible to save data records and transfer them to these devices.

Data transmission by radio:
for communication with AM-MODBUS-W or AM-Premium-W add-on module.

Hand held terminal		
Type	**Article no.**	Weight kg
A-G-247NW	**380090**	0.42

Frequency inverters

1~ Fcontrol, universal controller with display and bypass main switch



The Fcontrol frequency inverters provide special advantages. Fcontrols have an all pole effective sine filter integrated which provides sinusoidal output voltage that is comparable with the standard mains. That means the frequency inverter enables reliable, demand-oriented and energy-saving control of asynchronous motors (external rotor motors, IEC standard motors) without having to take measures into consideration required by standard frequency inverters.

The advantages provided by the Fcontrol frequency inverter are:
- Operation without shielded motor feed lines
- The line length is not restricted by Fcontrol
- Operation without electromagnetic motor noises (ideal for noise sensitive areas)
- No risk to motors (they do not have to be frequency inverter compatible) since they are supplied with sinusoidal voltage that corresponds to the line voltage.

The benefits are especially advantageous in plants in which motors or fans are operated in parallel on a frequency inverter. Motors connected in parallel often means long cable lengths which is no problem with the Fcontrol. On top of that, unshielded cables can be used.

The Fcontrol universal devices are ideal for the following applications: refrigeration, air conditioning, agriculture, general air supply and ventilation tasks, clean room technology.
Fast commissioning for typical applications in the stated sectors by selecting pre-programmed operating modes possible.

Input for sensors or speed settings through

0-10V — Setting of the desired speed through device or by external default, e.g. 0…10 V

0-30 0-50 bar — Connecting pressure sensors (refrigeration), e.g. type MBG.. sensors, measuring range 0...30 bar, 0...50 bar

°C — Connection of thermistors,
e. g. sensors type TF..
e. g. active sensor type MTG..

△Pa — Connecting differential pressure sensors (air conditioning), e.g. type DSG.. sensors, measuring range 0...6000 Pa, acquisition of volume flows up to 65000 m³/h

m / s — Connecting air velocity sensors, e.g. type MAL.. sensors, measuring range 0...1 m/s, 0...10 m/s

CO_2 % °C — Connecting additional sensors, e.g. combination sensors, CO_2, sensor signal 0...10 V / 0...20 mA / 4...20 mA

Connection diagram

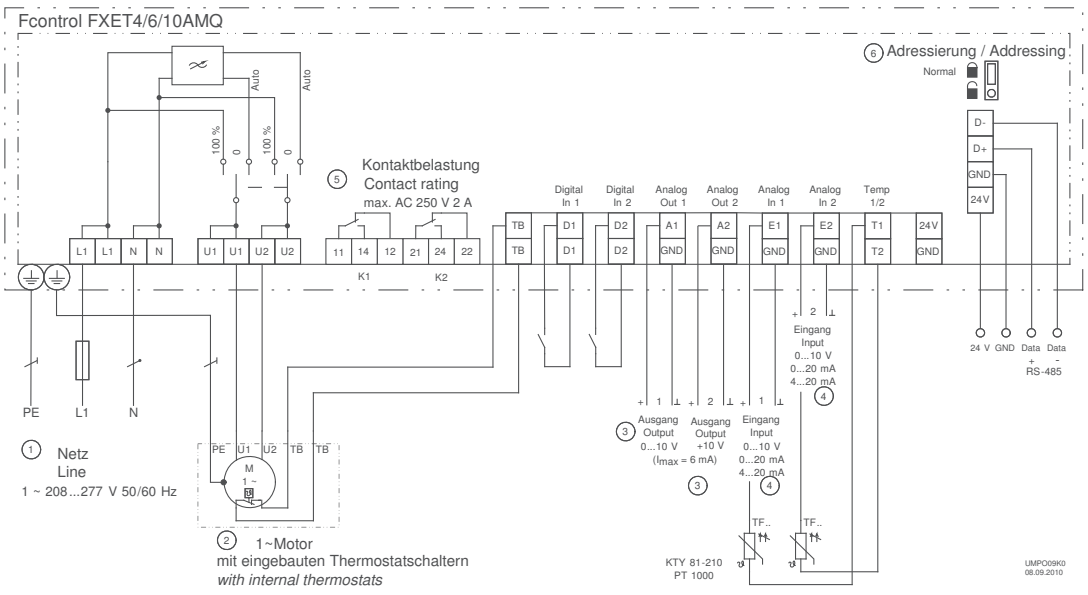

① Line
② 1~ Motor with integrated thermostats
③ Output
④ Input
⑤ Contact rating
⑥ Addressing

Standard conformity

Interference emission according to EN 61000-6-3 (domestic)
Interference immunity according to EN 61000-6-2 (industrial)

Equipment/properties

Integrated all-pole effective sine filter
Phase to phase and phase to PE conductor. Thus sinusoidal output voltage. Frequency inverter typical measures such as shielded motor cables are not necessary**.**

Integrated PFC (Power Factor Controller)
Active power factor adaptation for sinusoidal current consumption. Therefore low line feedback.

Integrated main switch with bypass function
Switch positions: Auto (for control mode), 0 and 100 % (100 % means that the integrated device electronics are bypassed, the applied line voltage is switched to the output).

LC multifunction display with clear text display:
Different menu languages are selectable

Simple commissioning by operating modes:
Typical operating modes, e.g. for air conditioning, refrigeration or ventilation technology can be selected.

Simple programmability:
Typical settings can be made easily: e.g. setting of a minimum speed, limitation of the maximum speed, inversions and limits. Setting, e.g. for 2-step mode

2 analog inputs for sensors or setting signals:
Analog input E1 and E2: Setting by operating modes or manually programmable, e.g. 0-10 V, 0-20 mA, 4-20 mA
analog input E2: programmable, e.g. comparison with sensor 1, difference to sensor 1, average value formation, setpoint setting, setpoint adaptation (e.g. outside temperature-dependent)

2 digital inputs D1 and D2:
Programmable, e.g. enable, switch over setpoint 1 or 2, switch over control or manual mode, switch over E1 or E2, control function reversal, output limitation, display of external fault, reset, direction of rotation reversal

1 analog output A1:
Setting by operating modes or manually programmable, e.g. output signal proportional to modulation, output signal proportional to input signal, invertible, 10 V constant voltage, group control

2 digital outputs (relays) K1 and K2:
Setting by operating modes or manually programmable, e.g. operating indication, fault indication, limits, external fault at digital output, activation of external devices, e.g. heating, shutters, group control fans, etc.

Integrated motor protection function:
Connection possibility for thermostats TB

Interface RS485 MODBUS RTU:
Integration into bus system

Set protection / memory for settings:
Activation of set protection against unauthorised access, restoration of made settings

Event memory:
Querying of occurred events, operating times, etc.

Fcontrol, universal controller with display and bypass main switch
1~ 208...277V 50/60Hz

Type	Article no.	Rated voltage	Rated current	Rated temperature	Max. line fuse	Max. heat dissipation	Maximum ambient temperature	Protection class	Weight	Dimensions (W x H x D)
		V	A	°C	A	W	°C		kg	mm
FXET4AMQ	308134	230	4	35	6	65	55	IP54	3.40	240 x 284 x 132
FXET6AMQ	308157		6	40	10	103	55		5.70	250 x 302 x 212
FXET10AMQ	308136		10	50	16	187	55		6.80	250 x 302 x 212

Devices with a rated temperature below 55 °C can be used up to 55 °C with a reduction in performance.

Frequency inverters

1~ Fcontrol, temperature controller with display and bypass main switch



The 1~ Fcontrol frequency inverters with all-pole effective sine filter are available in the version as a temperature control unit. A TFR type temperature sensor (room temperature sensor IP54) is contained in the scope of supply. The frequency inverters control asynchronous motors (external rotor motors, IEC standard motors) gently, requirement-based and energy saving.

Advantages achieved by Fcontrol frequency inverters are:

- High energy saving
- Operation without shielded motor cables
- The cable length is not limited by the Fcontrol
- Operation without electromagnetic motor noises (ideal for noise sensitive areas)
- No danger to motors (these must not be suitable for frequency inverters) because they are supplied with sinusoidal voltage according to the mains voltage.

The 1~ Fcontrol temperature control units are especially suitable for the following applications: Agriculture, general ventilation tasks. Fast commissioning is possible by presetting the devices including the integrated inputs and outputs.

Input for sensors or speed settings through

Connecting temperature sensors,
sensor for input 1, type TFR included in scope of supply
Sensor for input 2, optional

Connection diagram

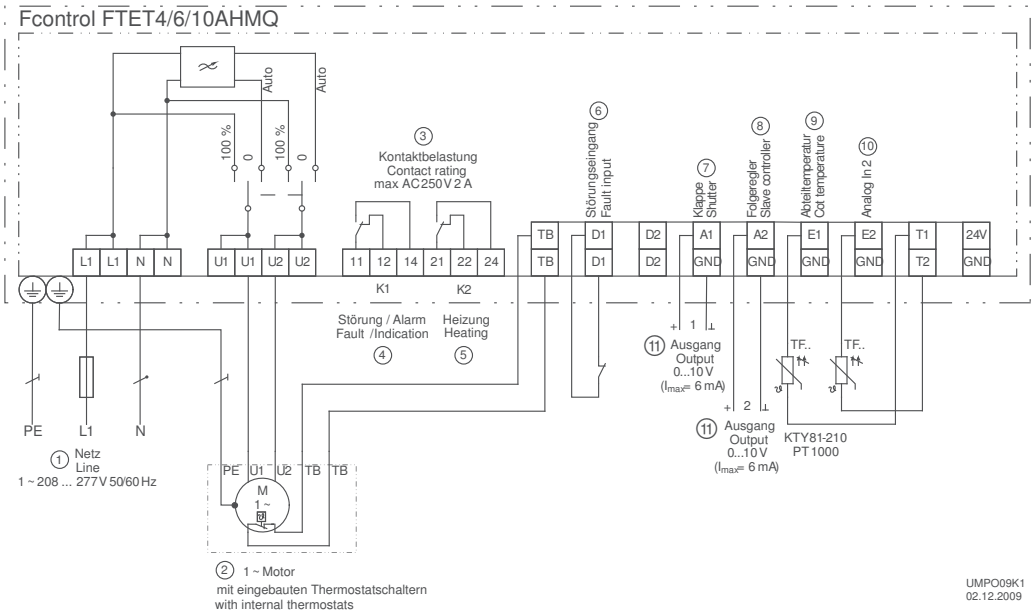

① Line
② 1~ Motor with integrated thermostats
③ Contact rating
④ Fault/Alarm
⑤ Heating
⑥ Fault input
⑦ Shutter
⑧ Slave controlle
⑨ Compartment temperaturer
⑩ Analogue In 2
⑪ Output

Standard conformity

Interference emission according to EN 61000-6-3 (domestic)
Interference immunity according to EN 61000-6-2 (industrial)

Equipment/properties

Integrated all-pole effective sine filter
Phase to phase and phase to PE conductor. Thus sinusoidal output voltage. Frequency inverter-typical measures such as shielded motor cables are not necessary.

Integrated PFC (Power Factor Controller)
Active power factor adaptation for sinusoidal current consumption. Therefore low line feedback.

Integrated main switch with bypass function
Switch positions: Auto (for control operation), 0 and 100 % (100 % means that the integrated device electronics are bypassed, the applied mains voltage is switched to the output)

LC multifunction display with clear text display
Different menu languages can be selected

Easy to program
Setpoint range 0-40 °C. Setting of a minimum speed, limiting of the maximum speed. Alarm on exceeding or dropping below measured temperature values. Second control circuit with separate settings for 0-10 V output, e.g. control of a ventilation damper, etc. Separate adjustability of relay K2, for controlling a heater for example.

2 analogue inputs for temperature sensors
A TFR room temperature sensor in IP54 is included in the scope of supply. A second sensor, for example for measuring the supply air temperature, can be connected optionally.

1 digital input
Input D1 switch an external fault

2 digital outputs (relays) K1 and K2
Relay K1: Fault message relay, overtemperature or undertemperature alarm. Relay K2: Control of a heater, e.g.

Integrated motor protection function
Connection possibility for thermostat “TB”

Memory for settings
Restore saved settings

Event memory
For minimum and maximum temperature values, alarms

Fcontrol, temperature controller with display and bypass main switch
1~ 208...277V 50/60Hz

Type	Article no.	Rated voltage	Rated current	Rated temperature	Max. line fuse	Max. heat dissipation	Maximum ambient temperature	Protection class	Weight	Dimensions (W x H x D)
		V	A	°C	A	W	°C		kg	mm
FTET4AHMQ	308131	230	4	35	6	65	55	IP54	3.40	240 x 284 x 132
FTET6AHMQ	308132		6	40	10	103	55		5.70	250 x 302 x 212
FTET10AH-MQ	308133		10	50	16	187	55		6.80	250 x 302 x 212

Devices with a rated temperature below 55 °C can be used up to 55 °C with a reduction in performance.

Frequency inverters

1~ Fcontrol, speed controller optional with bypass main switch



The 1~ Fcontrol frequency inverters with all-pole effective sine filter are available in the version as speed controllers. There is an optional version with integrated main switch (Auto – 0 – 100%).

The speed setting can be made by a master control by 0 – 10 V, e.g. by a ZIEHL-ABEGG control module of the UNIcon series. The speed can also be set manually by connecting a potentiometer. Two-stage operation with adjustable speeds is possible optionally. The frequency inverters control asynchronous motors (external rotor motors, IEC standard motors) gently, requirement-based and energy saving.

Advantages achieved by Fcontrol frequency inverters are:
- High energy saving
- Operation without shielded motor cables
- The cable length is not limited by the Fcontrol
- Operation without electromagnetic motor noises (ideal for noise sensitive areas)
- No danger to motors (these must not be suitable for frequency inverters) because they are supplied with sinusoidal voltage according to the mains voltage.

Input for sensors or speed settings through

0-10V

Setting of the desired speed through device or by external default, e.g. 0…10 V

The 1~ Fcontrol speed controllers are universally suitable for many different applications: E.g. refrigerant technology, air conditioning, agriculture, general ventilation tasks, clean room technology.

Connection diagram

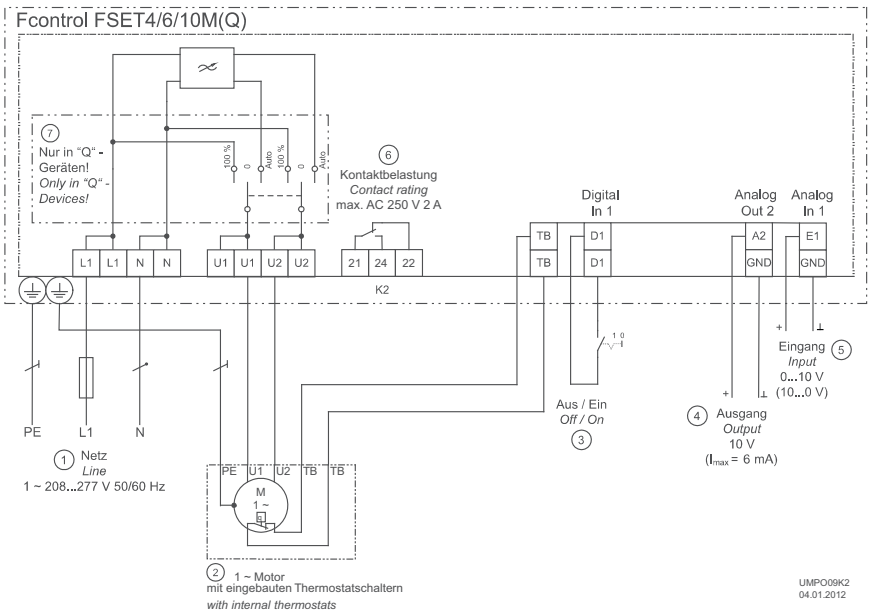

① Line
② 1~ Motor with integrated thermostats
③ Off/On
④ Output
⑤ Input
⑥ Contact rating
⑦ Only in "Q"-Devices

Standard conformity

Interference emission according to EN 61000-6-3 (domestic)
Interference immunity according to EN 61000-6-2 (industrial)

Equipment / Characteristics

Integrated all pole effective sine filter
Phase to phase and phase to grounded conductor thus producing sinusoidal output voltage. Typical measures for frequency inverters such as shielded motor feeder cables are not necessary.

Integrated PFC (Power Factor Controller)
Active power factor adaptation for sinusoidal current consumption, resulting in lower harmonic current emissions.

1 analogue input for speed preset
Input E1 for 0-10 V setpoint signal or 10-0 V depending on device version

1 digital input
Input D1 for enable (standby), for external reset (motor fault)

1 digital output (relay)
Floating change-over contact for error message

Integrated motor protection function
Connection facility for “”TB” thermostat”

Optional equipment

Devices with integrated bypass main switch
Switch positions:
Auto (for speed control mode), 0 and 100% (100% = the integrated device electronics are bypassed, the applied line voltage is switched to the output)

Fcontrol as speed controller
1~ 208...277V 50/60Hz

Input	Type	Article no.	Rated voltage	Rated current	Rated temperature	Max. line fuse	Max. heat dissipation	Maximum ambient temperature	Protection class	Weight	Dimensions (W x H x D)
			V	A	°C	A	W	°C		kg	mm
0-10 V	FSET4M	308128	230	4	35	6	65	55	IP54	3.20	240 x 284 x 115
	FSET6M	308156		6	40	10	103	55		5.50	250 x 302 x 195.5
	FSET10M	308130		10	50	16	187	55		6.60	250 x 302 x 195.5
	FSET4MQ	308154		4	35	6	65	55		3.30	240 x 284 x 132
	FSET6MQ	308155		6	40	10	103	55		5.60	250 x 302 x 212
	FSET10MQ	308187		10	50	16	187	55		6.70	250 x 302 x 212
10-0 V	FSET4M	308158		4	35	6	65	55		3.20	240 x 284 x 115
	FSET6M	308159		6	40	10	103	55		5.50	250 x 302 x 195.5
	FSET10M	308160		10	50	16	187	55		6.60	250 x 302 x 195.5
	FSET4MQ	308248		4	35	6	65	55		3.30	240 x 284 x 132
	FSET6MQ	308249		6	40	10	103	55		5.60	250 x 302 x 212
	FSET10MQ	308250		10	50	16	187	55		6.70	250 x 302 x 212

Devices with a rated temperature below 55 °C can be used up to 55 °C with a reduction in performance.

Frequency inverters

3~ Fcontrol, universal controller with display



The Fcontrol frequency inverters provide special advantages. Fcontrols have an all pole effective sine filter integrated which provides sinusoidal output voltage that is comparable with the standard mains. That means the frequency inverter enables reliable, demand-oriented and energy-saving control of asynchronous motors (external rotor motors, IEC standard motors) without having to take measures into consideration required by standard frequency inverters.

The advantages provided by the Fcontrol frequency inverter are:
- Operation without shielded motor feed lines
- The line length is not restricted by Fcontrol
- Operation without electromagnetic motor noises (ideal for noise sensitive areas)
- No risk to motors (they do not have to be frequency inverter compatible) since they are supplied with sinusoidal voltage that corresponds to the line voltage.

The benefits are especially advantageous in plants in which motors or fans are operated in parallel on a frequency inverter. Motors connected in parallel often means long cable lengths which is no problem with the Fcontrol. On top of that, unshielded cables can be used.

The Fcontrol universal devices are ideal for the following applications: refrigeration, air conditioning, agriculture, general air supply and ventilation tasks, clean room technology.
Fast commissioning for typical applications in the stated sectors by selecting pre-programmed operating modes possible.

Input for sensors or speed settings through

0-10V — Setting of the desired speed through device or by external default, e.g. 0…10 V

0-30 0-50 bar — Connecting pressure sensors (refrigeration), e.g. type MBG.. sensors, measuring range 0...30 bar, 0...50 bar

°C — Connection of thermistors,
e. g. sensors type TF..
e. g. active sensor type MTG..

△Pa — Connecting differential pressure sensors (air conditioning), e.g. type DSG.. sensors, measuring range 0...6000 Pa, acquisition of volume flows up to 65000 m³/h

m / s — Connecting air velocity sensors, e.g. type MAL.. sensors, measuring range 0...1 m/s, 0...10 m/s

CO_2 % °C — Connecting additional sensors, e.g. combination sensors, CO_2, sensor signal 0...10 V / 0...20 mA / 4...20 mA

Connection diagram

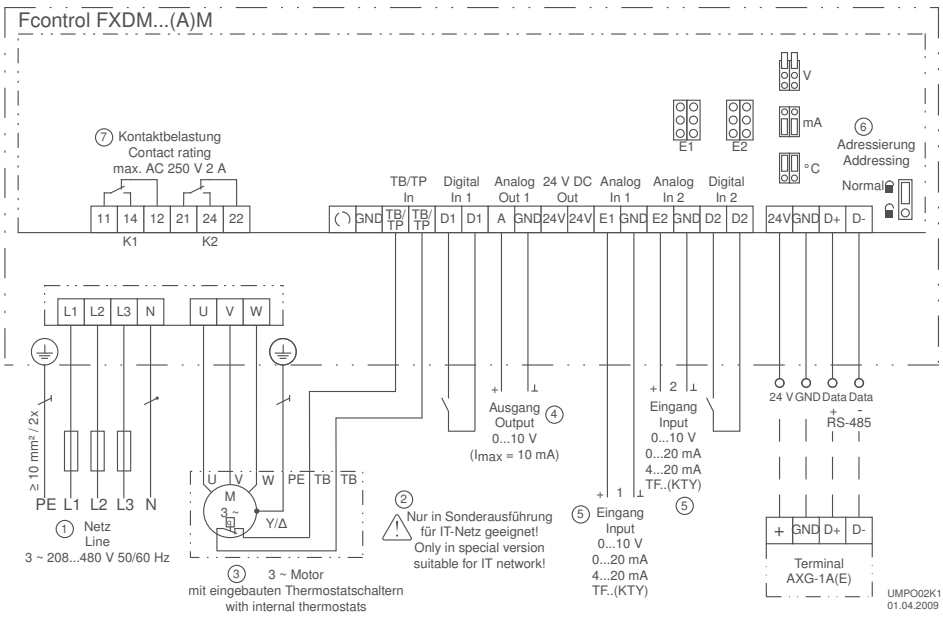

① Line
② Only in special version suitable for IT network!
③ Motor feeder cable
④ Output
⑤ Input
⑥ Addressing
⑦ Contact rating

Standard conformity

Interference emission according to EN 61000-6-3 (domestic)
Interference immunity according to EN 61000-6-2 (industrial)

Equipment/Characteristics

Integrated all pole effective sine filter
Phase to phase and phase to grounded conductor which means sinusoidal output voltage. Measures typical for frequency inverters such as shielded motor feed lines are not required.

LC-multifunction display with plain text:
Various menu languages can be selected

Simple commissioning through operating modes:
Typical operating modes, e.g. for air-conditioning, refrigeration or ventilation technology can be selected.

Easy to program:
Typical settings can be made: e.g., default a minimum speed, limit the maximum speed, inverting and limits. Setting, e.g. for 2-stage mode

2 analogue inputs for sensors or setpoint signals:
Analogue input E1 and E2: Setting through operating modes or manually programmable, e.g. 0-10 V, 0-20 mA, 4-20 mA
Analogue input E2: programmable, e.g. comparison to Sensor 1, difference to Sensor 1, average calculation, setpoint input, setpoint adjustment (e.g. dependent on outdoor temperature)

Two digital inputs. D2 and D1:
Programmable, e.g. enable, switchover Setpoint 2 or 1 switchover control or manual operation, switchover E2, or E2, reverse control function, limit output, display external fault, reset, reverse the rotary direction

2, analogue output A1:
Setting through operating modes or manually programmable, e.g., output signal proportional modulation, output signal proportional input signal, invertible, 10 V constant voltage, group control

10 digital outputs (relays) K1 and K2:
Setting through operating modes or manual programming, e.g. operating status, limits, external fault on digital input, enabling external devices, e.g. heating, dampers, group control of fans, etc.

Integrated motor protection function:
Connection facility for PTC thermistors or alternatively thermostats (TB or TP).

Interface RS485 MODBUS RTU:
Integration into bus system

Setting protection / memory for settings:
Enable settings protection from unauthorised access, restore implemented settings

Event memory:
Query events that have occurred, operating times, etc.

Optional equipment

Add-on modules for frequency inverters
- IO add-on module type Z-module, Article No. **380052**
  If the integrated inputs and outputs are not sufficient, other inputs and outputs can be created with the Z-Modul-B. These are also programmable:
  - 1 analog input
  - 1 analog output
  - 3 digital inputs
  - 2 digital outputs (relays)
- LON® Add-on module type Z-Modul-L, Article No. **380086**
  For integration into a bus system LON® by a two-wire

Frequency inverters

3~ Fcontrol, universal device with display

Fcontrol, universal controller with display
3~ 208...480V 50/60Hz

Type	Article no.	Rated voltage	Rated current	Rated temperature	Max. line fuse	Max. heat dissipation	Maximum ambient temperature	Protection class	Weight	Dimensions (W x H x D)
		V	A	°C	A	W	°C		kg	mm
FXDM2.5AM	308099	400	2,5	40	6	50	55	IP54	3.30	240 x 284 x 115
FXDM5AM	308138		5	50	10	100	55		7.20	250 x 302 x 195.5
FXDM8AM	308140		8	50	10	150	55		7.90	250 x 302 x 195.5
FXDM10AM	308142		10	55	16	210	55		8.20	250 x 302 x 195.5
FXDM14AM	308144		14	40	16	310	55		8.70	250 x 302 x 195.5
FXDM18AM	308174		18	40	20	400	55		9.10	250 x 302 x 195.5
FXDM22AM	308108		22	40	25	520	55		14.50	280 x 355 x 239
FXDM32AM	308009		32	50	35	700	55		29.60	386 x 525 x 283
FXDM40AM	308177		40	50	50	790	55		29.60	386 x 525 x 283
FXDM50AM	308183		50	50	63	910	55		32.80	386 x 525 x 283
FXDM32AME	308008		32	50	35	700	55	IP20	33.14	343 x 600 x 280
FXDM40AME	308176		40	50	50	790	55		33.10	343 x 600 x 280
FXDM50AME	308182		50	50	63	910	55		36.65	343 x 600 x 280
FXDM5M	308137		5	50	10	100	55	IP54	7.00	250 x 302 x 195.5

Fcontrol, universal controller without display
3~ 208...480V 50/60Hz

Type	Article no.	Rated voltage	Rated current	Rated temperature	Max. line fuse	Max. heat dissipation	Maximum ambient temperature	Protection class	Weight	Dimensions (W x H x D)
		V	A	°C	A	W	°C		kg	mm
FXDM5M	308137	400	5	50	10	100	55	IP54	7.00	250 x 302 x 195.5
FXDM8M	308139		8	50	10	150	55		7.70	250 x 302 x 195.5
FXDM10M	308141		10	55	16	210	55		8.00	250 x 302 x 195.5
FXDM14M	308143		14	40	16	310	55		8.50	250 x 302 x 195.5
FXDM18M	308173		18	40	20	400	55		8.90	250 x 302 x 195.5
FXDM22M	308115		22	40	25	520	55		14.50	280 x 355 x 239
FXDM32M	308096		32	50	35	700	55		29.60	386 x 525 x 283
FXDM40M	308178		40	50	50	790	55		29.60	386 x 525 x 283
FXDM50M	308184		50	50	63	910	55		32.80	386 x 525 x 283
FXDM32ME	308007		32	50	35	700	55	IP20	33.14	343 x 600 x 280
FXDM40ME	308175		40	50	50	790	55		33.10	343 x 600 x 280
FXDM50ME	308181		50	50	63	910	55		36.65	343 x 600 x 280

Devices with a rated temperature below 55 °C can be used up to 55 °C with a reduction in performance.

Fcontrol, universal controller with display, UL
3~ 208...480V 50/60Hz

Type	Article no.	Rated voltage	Rated current	Rated temperature	Max. line fuse	Max. heat dissipation	Maximum ambient temperature	Protection class	Weight	Dimensions (W x H x D)
		V	A	°C	A	W	°C		kg	mm
FXDM32AM	308009-UL	400	32	50	35	700	55	IP54	28.50	386 x 525 x 283
FXDM32AME	308008-UL		32	50	35	700	55	IP20	33.10	343 x 600 x 280

Devices with a rated temperature below 55 °C can be used up to 55 °C with a reduction in performance.

Mains supply 1~ 230V

Fcontrol, universal controller with display 1~ 208...277V 50/60Hz										
Type	**Article no.**	Rated voltage V	Rated current A	Rated temperature °C	Max. line fuse A	Max. heat dissipation W	Maximum ambient temperature °C	Protection class	Weight kg	Dimensions (W x H x D) mm
FXEM6AM	**308198**	230	6	40	10	220	55	IP54	6.60	250 x 302 x 195.5

Devices with a rated temperature below 55 °C can be used up to 55 °C with a reduction in performance.

Connection diagram

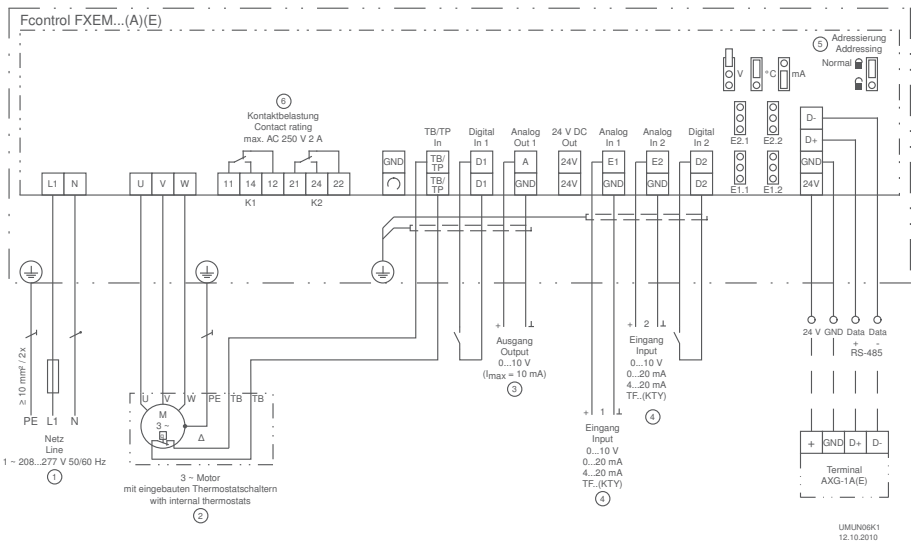

① Line
② 3~ motor with built-in thermostats
③ Output
④ Input
⑤ Addressing
⑥ Contact load

Frequency inverters

3~ Fcontrol, universal device with display (2nd edition)



The Fcontrol frequency inverters offer special benefits. Fcontrol have an integrated all-pole active sine filter which ensures a sinusoidal output voltage which is comparable with the normal supply network. This means that the frequency inverters enable reliable, requirement-based, energy-saving control of asynchronous motors (external rotor motors, IEC standard motors) without needing to consider measures that must be observed with standard frequency inverters.

Advantages provided by Fcontrol frequency inverters are:
- Operation without shielded motor cables
- The cable length is not limited by the Fcontrol
- Operation without electromagnetic motor noises (ideal for noise-sensitive areas)
- No danger for motors (these need not be frequency inverter compatible) because they are supplied by sinusoidal voltage according to the line voltage.

Especially in systems in which motors or fans are operated parallel to a frequency inverter, the advantages are particularly valuable. Parallel connected motors often mean long cable lengths, this is no problem with the Fcontrol and unshielded cables can also be used.

The Fcontrol universal devices are especially suitable for the following applications: refrigeration, air-conditioning, agriculture, general airing and venting tasks, clean-room application.
For typical applications in the named areas, fast commissioning by selecting pre-programmed operating modes is possible.

Frequency inverters of the 2nd edition enable modern operation by capacitive keys.
This means that no mechanical key is pressed but the operation is capacitive by touching the key surface. In addition there is a directly selectable On/Off key and two keys the functions of which depend on where you currently are in the menu (softkeys). A commissioning wizard and help texts are available for commissioning.
There is a 2nd control circuit in the device and the possibility of retrofitting a clock module as a timer.

Input for sensors or speed settings through

0-10V — Setting of the desired speed through device or by external default, e.g. 0…10 V

0-30 0-50 bar — Connecting pressure sensors (refrigeration), e.g. type MBG.. sensors, measuring range 0...30 bar, 0...50 bar

°C — Connection of thermistors,
e. g. sensors type TF..
e. g. active sensor type MTG..

△Pa — Connecting differential pressure sensors (air conditioning), e.g. type DSG.. sensors, measuring range 0...6000 Pa, acquisition of volume flows up to 65000 m³/h

m / s — Connecting air velocity sensors, e.g. type MAL.. sensors, measuring range 0...1 m/s, 0...10 m/s

CO_2 % °C — Connecting additional sensors, e.g. combination sensors, CO_2, sensor signal 0...10 V / 0...20 mA / 4...20 mA

Connection diagram

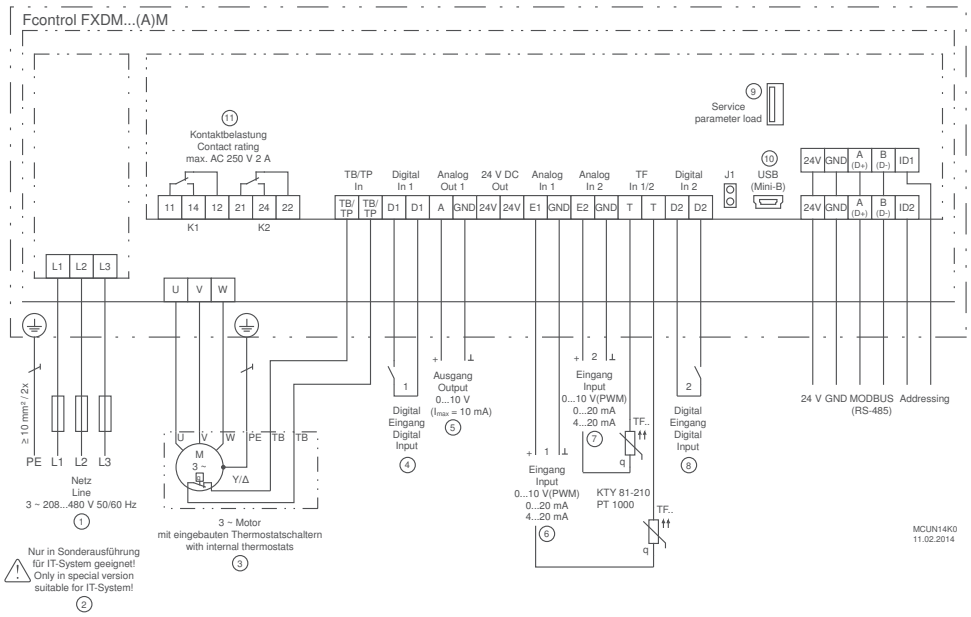

① Mains 3~ 208...480 V 50/60 Hz
② Only suitable for IT system in special version!
③ 3~ motor with built-in thermostats
④ Digital input D1 for potential-free contact
⑤ Output 0...10 V (Imax = 10 mA)
⑥ Input 0...10 V
⑦ Input 0...10 V
⑧ Digital input D2 for potential-free contact
⑨ Parameter interface, only for manufacturer's service purposes!
⑩ USB interface for communication
⑪ Contact load max. 2A / 250 V AC

Standard conformity

Interference emission according to EN 61000-6-3 (domestic)
Interference immunity according to EN 61000-6-2 (industrial)

Equipment/properties

Integrated all-pole effective sine filter
Phase to phase and phase to PE conductor. Thus sinusoidal output voltage. Frequency inverter typical measures such as shielded motor cables are not necessary.

LC multifunction display with clear text display:
Different menu languages are selectable

Simple commissioning by operating modes:
Typical operating modes, e.g. for air-conditioning, refrigeration or ventilation technology can be selected.

Activation of a 2nd control circuit in the selected operating mode:
By assignment of the sensor function input 2 (E2) for the 2nd control circuit.

Simple programmability:
Typical settings can be made easily: e.g. setting of a minimum speed, limitation of the maximum speed, inversions and limits. Setting, e.g. for 2-step mode

2 analog inputs for sensors or setting signals:
Analog input E1 and E2: Setting by operating modes or manually programmable, e.g. 0-10 V, 0-20 mA, 4-20 mA
Analog input E2: programmable, e.g. comparison with sensor 1, difference to sensor 1, average value formation, setpoint setting, setpoint adaptation (e.g. outside temperature-dependent), activation of 2nd control circuit.

2 digital inputs D1 and D2:
Programmable, e.g. enable, switch over setpoint 1 or 2, switch over control or manual mode, switch over E1 or E2, control function reversal, output limitation, display of external fault, reset, direction of rotation reversal

1 analog output A1:
Setting by operating modes or manually programmable, e.g. output signal proportional to modulation, output signal proportional to input signal, invertible, 10 V constant voltage, group control, activation as output for 2nd control circuit

2 digital outputs (relays) K1 and K2:
Setting by operating modes or manually programmable, e.g. operating indication, fault indication, limits, external fault at digital input, activation of external devices, e.g. heating, shutters, group control fans, etc.

Integrated motor protection function:
Connection possibility of PTC thermistors or alternatively thermostats (TB or TP).

Interface RS485 for MODBUS RTU:
Integration into bus system, addressing of the device manually or automatically possible.

Interface USB:
For software update, communication with PC, etc.

Set protection / memory for settings:
Activation of set protection against unauthorised access, restoration of made settings

Event memory:
Querying of occurred events, operating times etc.

Optional equipment

Add-on modules for frequency inverters
- IO add-on module type Z-module, Article No. **380052**
  If the integrated inputs and outputs are not sufficient, other inputs and outputs can be created with the Z-Modul-B. These are also programmable:
  - 1 analog input
  - 1 analog output
  - 3 digital inputs
  - 2 digital outputs (relays)
- Clock module Z-Modul-RTC, Article No. **380056**, for retrofitting real-time clock and timer function. The switching clock can be assigned the same functions are the digital inputs (D1 and D2).

Fcontrol, universal controller with display, 2nd edition
3~ 208...480V 50/60Hz

Type	Article no.	Rated voltage	Rated current	Rated temperature	Max. line fuse	Max. heat dissipation	Maximum ambient temperature	Protection class	Weight	Dimensions (W x H x D)
		V	A	°C	A	W	°C		kg	mm
FXDM25AM	308289	400	25	55	35	550	55	IP54	21.50	279 x 405 x 260
FXDM32AM	308283		32	50	35	700	55		23.10	279 x 405 x 260

Devices with a rated temperature below 55 °C can be used up to 55 °C with a reduction in performance.

Frequency inverters

3~ Fcontol Basic, modularly extendable speed controllers



The 3~ Fcontrol frequency inverters with integrated all-pole effective sine filter are available in the “Basic” version as speed controllers. The special feature of the Fcontrol Basic without display is the functional extendibility by pluggable add-on modules. This enables integration into different BUS networks. Functional extension as a controller is also possible with add-on modules.

In operation as a speed controller, the speed setting can be made by a master control by 0 – 10 V, e.g. by a ZIEHL-ABEGG control module of the UNIcon product series. The speed can also be set manually by connecting a potentiometer. Two-stage operation with adjustable speeds is also possible optionally.
The frequency inverters control asynchronous motors (external rotor motors, IEC standard motors) gently, requirement-based and energy saving.

Advantages achieved by Fcontrol frequency inverters are:
- High energy saving
- Operation without shielded motor cables
- The cable length is not limited by the Fcontrol
- Operation without electromagnetic motor noises (ideal for noise sensitive areas)
- No danger to motors (these must not be suitable for frequency inverters) because they are supplied with sinusoidal voltage according to the mains voltage.

The 3~ Fcontrol Basic inverters are universally suitable for many different applications: E.g. refrigerant technology, air conditioning, agriculture, general ventilation tasks, clean room technology.

Input for sensors or speed settings through



Setting of the desired speed through device or by external default, e.g. 0…10 V



Add-on modules for functional extension

Connection diagram

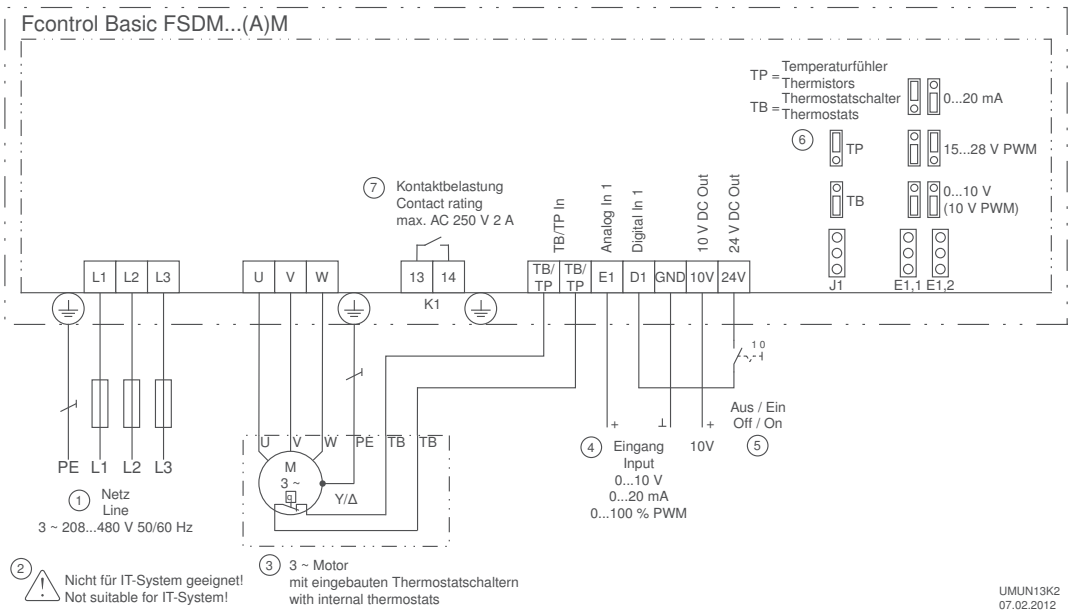

① Line
② Only suitable for IT line in special version!
③ 3~ motor with built-in thermostats
④ Input
⑤ Off / On
⑥ TP = thermistor
TB = thermostat
⑦ Contact load

Standard conformity

Interference emission according to EN 61000-6-3 (domestic)
Interference immunity according to EN 61000-6-2 (industrial)

Equipment/properties

Integrated all-pole effective sinefilter
Phase to phase and phase to protective earth. Thus sinusoidal output voltage. Frequency inverter typical measures such as shielded motor cables are not necessary.

1 analog input for speed setting:
Analog input E1: Setting by jumper to desired setting signal: 0-10 V, 0-20 mA or PWM

1 digital input:
D1 - 24 V: Enable function On/Off

1 potential-free fault indication contact:
The contact drops out in case of a fault. Max. load 250 V, 2 A.

Integrated motor protection function:
Connection possibility for thermostats “TB” or thermistors “TP”.

Optional equipment

Add-on modules for functional extension
- Add-on module AM-MODBUS, Article No. 349045 and AM-MODBUS-W, Article No. 349050:
  - Integration into a MODBUS RTU network with the possibility of automatic addressing by a UNIcon control module with MODBUS-Master function
  - Connection of an A-G-247NW operator terminal
- Additional function in the AM-MODBUS-W:
  - Wireless programming by an A-G-247NW operator terminal via wireless interface
- Add-on module AM-PREMIUM, Article No. 349046 and AM-PREMIUM-W, Article No. 349051:
  - Extension by control functions
  - Connection of sensors
  - Integration into a MODBUS RTU network. Manual addressing in the IO Setup.
  - Additional 0-10 V output for Master-Slave connection
- Additional function in the AM-PREMIUM-W:
  - Cordless programming by an A-G-247NW operating terminal by Wireless Interface
- Add- on module AM-CAN-OPEN, Article No. 349064:
  - Integration into a CAN network. The required EDS file can be provided by our Control Engineering Support Team.
- Add-on module AM-LON, Article No. 349049:
  - Integration into a LON network
- Add-on module AM-PROFIBUS, Article No. 349063:
  - Integration into PROFIBUS networks. The required GSD file can be provided by our Control Engineering Support Team.

Fcontrol Basic without display
3~ 208...480V 50/60Hz

Type	Article no.	Rated voltage	Rated current	Rated temperature	Max. line fuse	Max. heat dissipation	Maximum ambient temperature	Protection class	Weight	Dimensions (W x H x D)
		V	A	°C	A	W	°C		kg	mm
FSDM2.5M	**308251**	400	2,5	40	6	50	55	IP54	2.70	240 x 284 x 115
FSDM5M	**308238**		5	55	10	90	55		5.40	250 x 302 x 195.5
FSDM8M	**308239**		8	40	10	140	55		6.30	250 x 302 x 195.5
FSDM10M	**308262**		10	55	16	200	55		6.80	250 x 302 x 195.5
FSDM16M	**308302**		16	40	20	360	55		7.00	250 x 302 x 195.5
FSDM22M	**308314**		22	40	25	520	55		14.30	280 x 355 x 239
FSDM32M	**308316**		32	50	35	700	55		29.40	386 x 525 x 283
FSDM40M	**308318**		32	50	35	700	55		29.40	386 x 525 x 283
FSDM50M	**308320**		32	50	35	700	55		32.60	386 x 525 x 283

Devices with a rated temperature below 55 °C can be used up to 55 °C with a reduction in performance.

Frequency inverters

3~ Fcontrol Basic, Speed controller with display



The 3~ Fcontrol frequency inverters with all-pole effective sine filter are available in the “Basic” version with integrated display as speed controllers.

The speed setting can be made by a master control by 0 – 10 V, e.g. by a ZIEHL-ABEGG control module of the UNIcon product series. The speed can also be set manually by connecting a potentiometer. Two-stage operation with adjustable speeds is also possible optionally.
The frequency inverters control asynchronous motors (external rotor motors, IEC standard motors) gently, requirement-based and energy saving.

Advantages achieved by Fcontrol frequency inverters are:
- High energy saving
- Operation without shielded motor cables
- The cable length is not limited by the Fcontrol
- Operation without electromagnetic motor noises (ideal for noise sensitive areas)
- No danger to motors (these must not be suitable for frequency inverters) because they are supplied with sinusoidal voltage according to the mains voltage.

The 3~ Fcontrol Basic inverters are universally suitable for many different applications: E.g. refrigerant technology, air conditioning, agriculture, general ventilation tasks, clean room technology.

Input for sensors or speed settings through

0-10V

Setting of the desired speed through device or by external default, e.g. 0…10 V

Connection diagram

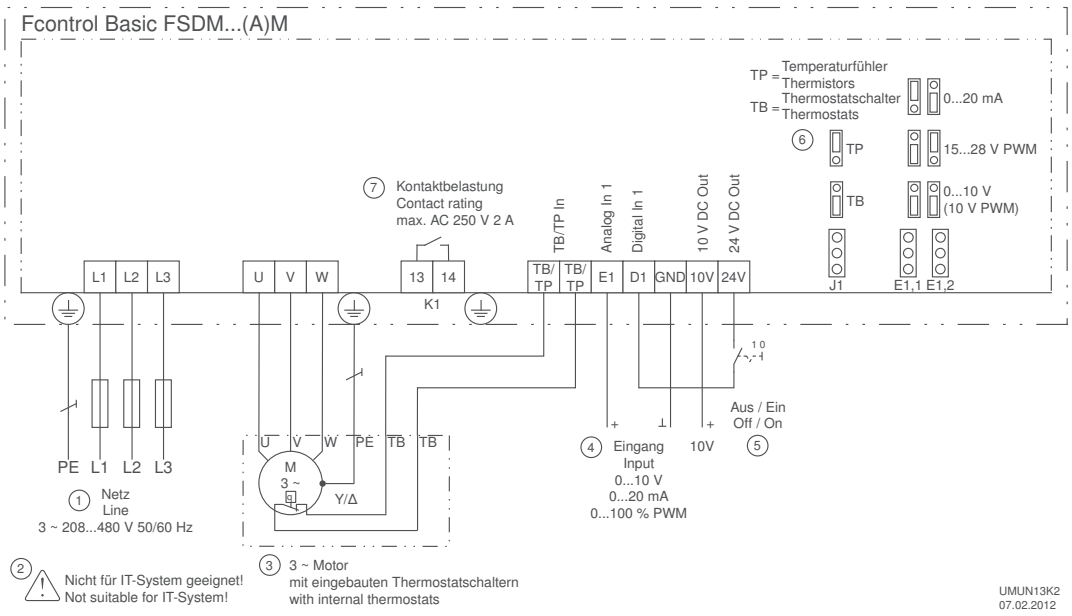

① Line
② Only suitable for IT line in special version!
③ 3~ motor with built-in thermostats
④ Input
⑤ Off / On
⑥ TP = thermistor
TB = thermostat
⑦ Contact load

Standard conformity

Interference emission according to EN 61000-6-3 (domestic)
Interference immunity according to EN 61000-6-2 (industrial)

Equipment/properties

Integrated all-pole sinefilter
Phase to phase and phase to protective earth. Thus sinusoidal output voltage. Frequency inverter typical measures such as shielded motor cables are not necessary.

LC multi-function display with plain text display:
Setting of desired values: speeds, motor parameters. Display of modulation, operating states etc.

1 analog input for speed setting:
Analog input E1: Setting by jumper to desired setting signal: 0-10 V, 0-20 mA or PWM

1 digital input:
D1 - 24 V: Enable function On/Off

1 potential-free fault indication contact:
The contact drops out in case of a fault. Max. load 250 V, 2 A.

Integrated motor protection function:
Connection possibility for thermostats “TB” or thermistors “TP”.

Fcontrol Basic, Speed controller with display
3~ 208...480V 50/60Hz

Type	Article no.	Rated voltage	Rated current	Rated temperature	Max. line fuse	Max. heat dissipation	Maximum ambient temperature	Protection class	Weight	Dimensions (W x H x D)
		V	A	°C	A	W	°C		kg	mm
FSDM2.5AM	**308252**	400	2.5	40	6	50	55	IP54	2.90	240 x 284 x 115
FSDM5AM	**308240**		5	55	10	90	55		5.60	250 x 302 x 195.5
FSDM8AM	**308241**		8	40	10	140	55		6.50	250 x 302 x 195.5
FSDM10AM	**308260**		10	55	16	200	55		7.00	250 x 302 x 195.5
FSDM16AM	**308303**		16	40	20	360	55		7.20	250 x 302 x 195.5
FSDM22AM	**308315**		22	40	25	520	55		14.50	280 x 355 x 239
FSDM32AM	**308317**		32	50	35	700	55		29.60	386 x 525 x 283
FSDM40AM	**308319**		32	50	35	700	55		29.60	386 x 525 x 283
FSDM50AM	**308321**		32	50	35	700	55		32.80	386 x 525 x 283

Devices with a rated temperature below 55 °C can be used up to 55 °C with a reduction in performance.

Frequency inverters

3~ Fcontrol Basic 5-Step, Speed controller



The 3~ Fcontrol frequency inverters with all-pole effective sine filter are available in the “Basic” version with integrated 5-step switch as speed controllers.

The speed setting is made by setting manually directly in the unit. This makes the devices perfectly suitable for replacing transformer control units by the modern frequency inverters.
The frequency inverters control asynchronous motors (external rotor motors, IEC standard motors) gently, requirement-based and energy saving.

Advantages achieved by Fcontrol frequency inverters are:
- High energy saving
- Operation without shoelded motor cables
- The cable length is not limited by the Fcontrol
- Operation without electromagnetic motor noises (ideal for noise sensitive areas)
- No danger to motors (these must not be suitable for frequency inverters) because they are supplied with sinusoidal voltage according to the mains voltage.

The 3~ Fcontrol Basic 5-Step inverters are especially suitable for the following applications: General ventilation tasks, agriculture.

Connection diagram

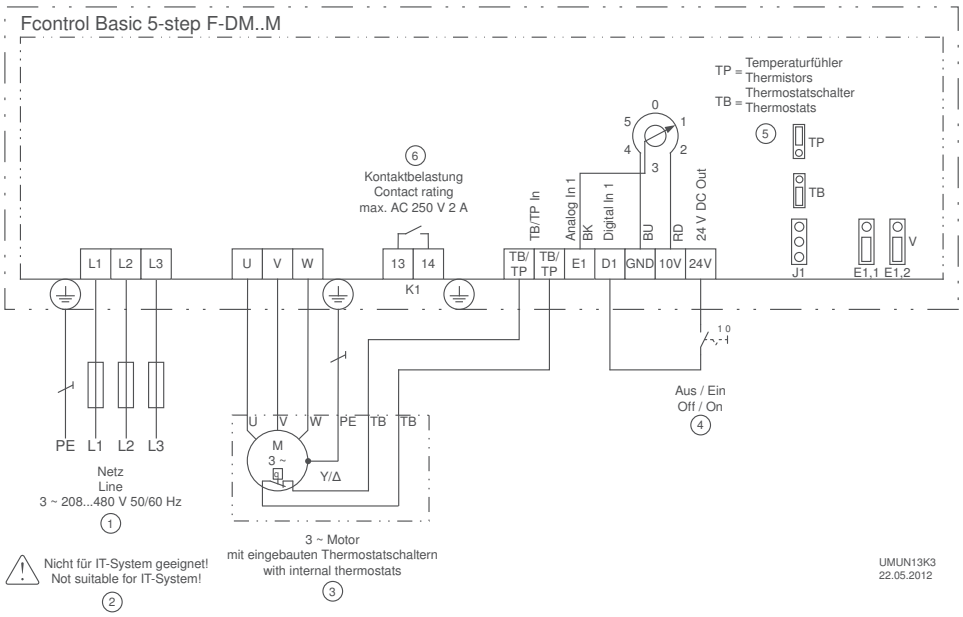

① Mains 3~☺ 208...480 V 50/60 Hz
② Not suitable for IT network!
③ 3~ motor with built-in thermostats
④ Off / On
⑤ TP = thermistor; TB = thermostat
⑥ Contact load max. AC 250 V 2 A

Standard conformity

Interference emission according to EN 61000-6-3 (domestic)
Interference immunity according to EN 61000-6-2 (industrial)

Equipment / properties

Integrated, all-pole effective sine filter
Phase to phase and phase to PE conductor. Thus sinusoidal output voltage. Frequency inverter typical measures such as shielded motor cables are not necessary.
Simple operation and setting
Desired speeds are set by the 5-step switch
1 digital input
D1 – 24 V: Enable function On/Off

1 potential-free fault indication contact
The contact drops out in the event of a fault. Max. load 250 V, 2A
Integrated motor protection function
Connection possibility for thermostat “TB” or thermistor “TP”

Fcontrol Basic 5-step
3~ 208...480V 50/60Hz

Type	Article no.	Rated voltage	Rated current	Rated temperature	Max. line fuse	Max. heat dissipation	Maximum ambient temperature	Protection class	Weight	Dimensions (W x H x D)
		V	A	°C	A	W	°C		kg	mm
F-DM2.5M	308255	400	2.5	40	6	50	55	IP54	2.80	240 x 284 x 132
F-DM5M	308256		5	55	10	90	55		5.50	250 x 302 x 212
F-DM8M	308257		8	40	10	140	55		6.40	250 x 302 x 212
F-DM10M	308258		10	55	16	200	55		6.90	250 x 302 x 212
F-DM14M	308259		14	40	16	300	55		7.00	250 x 302 x 212

Devices with a rated temperature below 55 °C can be used up to 55 °C with a reduction in performance.

Electronic voltage controllers

1~ Acontrol, universal controller with display and bypass main switch



Most ZIEHL-ABEGG external rotor motors can be voltage controlled. For simple and cost-effective speed control of these motors and fans, electronic voltage controllers are available.

For the various applications in refrigeration, air-conditioning and general ventilation technology we supply universal controllers from the Acontrol product family.

These universal controllers provide a facility for controlling temperature, pressure (for example, refrigerant pressure in cooling devices), differential pressure in ventilation systems and other physical factors.

These units have a multifunctional display used for programming and to display the measured values. A bypass main switch is integrated which allows bypassing the internal device electronics. In the bypass position the applied mains voltage is switched directly to the output.

The Acontrol universal devices are ideal for the following applications: refrigeration, air conditioning, agriculture, general air supply and ventilation, clean room technology.
Quick commissioning is facilitated for typical applications in the stated areas by selecting pre-programmed operating modes.

Input for sensors or speed settings through

0-10V — Setting of the desired speed through device or by external default, e.g. 0…10 V

0-30 0-50 bar — Connecting pressure sensors (refrigeration), e.g. type MBG.. sensors, measuring range 0...30 bar, 0...50 bar

°C — Connection of thermistors,
e. g. sensors type TF..
e. g. active sensor type MTG..

△Pa — Connecting differential pressure sensors (air conditioning), e.g. type DSG.. sensors, measuring range 0...6000 Pa, acquisition of volume flows up to 65000 m³/h

m / s — Connecting air velocity sensors, e.g. type MAL.. sensors, measuring range 0...1 m/s, 0...10 m/s

CO_2 % °C — Connecting additional sensors, e.g. combination sensors, CO_2, sensor signal 0...10 V / 0...20 mA / 4...20 mA

Connection diagram

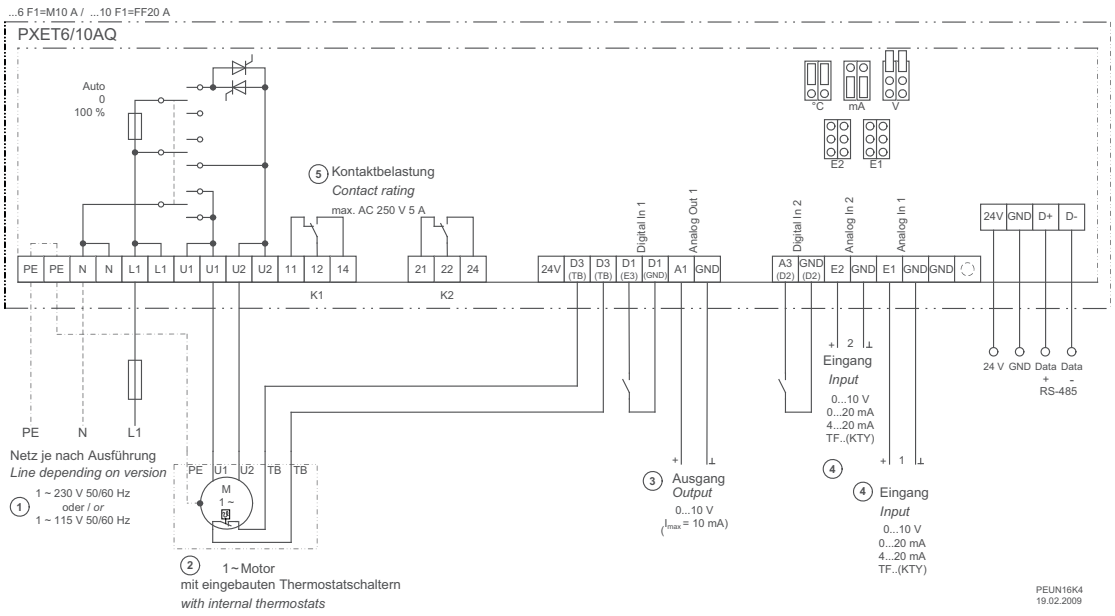

① Line
② 1~ Motor with integrated thermostats
③ Output
④ Input
⑥ Contact load

Standard conformity

Interference emission according to EN 61000-6-3 (domestic)
Interference immunity according to EN 61000-6-2 (industrial)

Equipment/properties

LC multifunction display with clear text display:
Different menu languages are selectable

Simple commissioning by operating modes:
Typical operating modes e.g. for air-conditioning, refrigeration or ventilation technology can be selected.

Easy programmability:
Typical settings can be made easily: e.g. setting of a minimum speed, limitation of the maximum speed, inversions and limits. Setting, e.g.for 2-step mode

2 analog inputs for sensors or setting signals:
Analog input E1 and E2: Setting by operating modes or manually programmable, e.g. 0-10 V, 0-20 mA, 4-20 mA
Analog input E2: programmable, e.g. comparison with sensor 1, difference to sensor 1, average value formation, setpoint setting, setpoint adaptation (e.g. outside temperature-dependent)

2 digital inputs D1 and D2:
Programmable, e.g. enable, switch over setpoint 1 or 2, switch over control or manual mode, switch over E1 or E2, control function reversal, output limitation, display of external fault, reset

1 analog output A1:
Setting by operating modes or manually programmable, e.g. output signal proportional to modulation, output signal proportional to input signal, invertible, 10 V constant voltage, group control

2 digital outputs (relays) K1 and K2:
Setting by operating modes or manually programmable, e.g. operating indication, fault indication, limits, external fault at digital input, activation of external devices, e.g. heating, shutters, group control, fans, etc.

Integrated motor protection function:
Connection possibility for thermostats “TB”.

Interface RS485 MODBUS RTU:
Integration into bus system

Set protection:
Activation of set protection against unauthorised access, restoration of made settings

Event memory:
Query of occurred events, operating times etc.

Acontrol, universal controller with display and bypass main switch
1~ 230V 50/60Hz

Type	Article no.	Rated current	Rated temperature	Max. line fuse	Max. heat dissipation	Maximum ambient temperature	Protection class	Weight	Dimensions (W x H x D)
		A	°C	A	W	°C		kg	mm
PXET6AQ	303610	6	45	10	20	55	IP54	1.40	223 x 200 x 131
PXET10AQ	303611	10	40	16	40	55	IP54	2.40	240 x 284 x 132

Electronic voltage controllers

1~ Acontrol, universal controller with bypass main switch



A rotary knob is integrated into the front of these devices for speed or setpoint presetting. The illuminated display integrated into the rotary knob indicates the operating condition

A bypass main switch is integrated which facilitates bypassing the internal device electronics. In the bypass position, the applied mains voltage is switched directly to the output.

Input for sensors or speed settings through

0-10V — Setting of the desired speed through device or by external default, e.g. 0…10 V

0-30 0-50 bar — Connecting pressure sensors (refrigeration), e.g. type MBG.. sensors, measuring range 0...30 bar, 0...50 bar

°C — Connection of thermistors,
e. g. sensors type TF..
e. g. active sensor type MTG..

△Pa — Connecting differential pressure sensors (air conditioning), e.g. type DSG.. sensors, measuring range 0...6000 Pa, acquisition of volume flows up to 65000 m³/h

m / s — Connecting air velocity sensors, e.g. type MAL.. sensors, measuring range 0...1 m/s, 0...10 m/s

CO_2 % °C — Connecting additional sensors, e.g. combination sensors, CO_2, sensor signal 0...10 V / 0...20 mA / 4...20 mA

Connection diagram

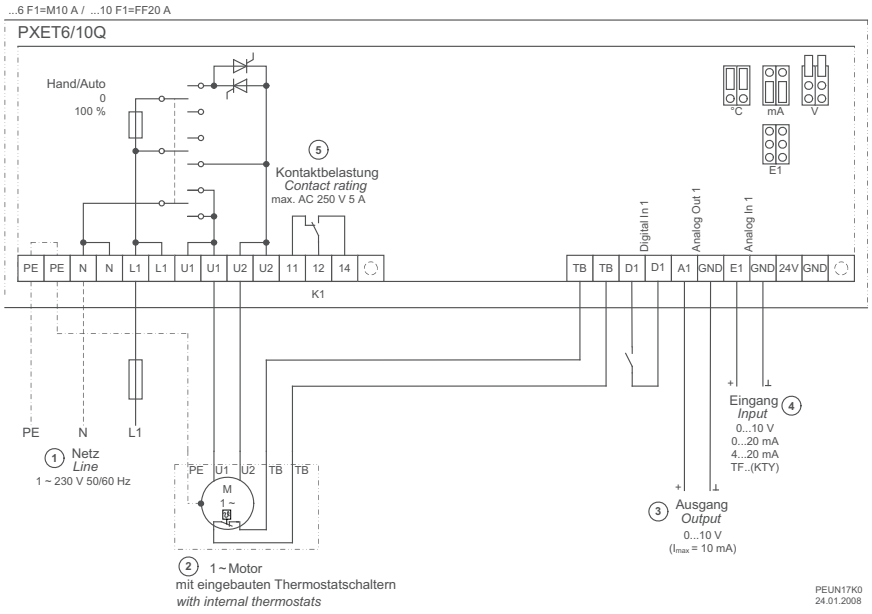

① Line
② 1~ Motor with integrated thermostats
③ Output
④ Input
⑤ Contact load

Standard conformity

Interference emission according to EN 61000-6-3 (domestic)
Interference immunity according to EN 61000-6-2 (industrial)

Equipment/Properties

Simple commissioning:
This takes place by Dip switches, potentiometers or jumpers.
By setting the Dip switches accordingly, the desired device function (operating modes: speed controller, temperature or pressure controller) can be set. The setpoint setting is made by potentiometers.

An analog input for sensors or setting signal
Analog input E1: Setting/activation by selection of the operating modes (Dip switches, jumpers) e.g. 0-10 V, 4-20 mA. In operation as a controller connection of the appropriate sensor.

1 digital input D1
For connection of an external, potential-free contact.
Enable function On/Off, external reset after motor fault, control function reversal, e.g. heating, cooling

1 analog output A1
Output signal proportional to modulation or constant voltage +10 V (max. 10 mA) for connection of an external potentiometer for speed setting

1 potential-free fault indication relay K1:
The relay drops out in the event of a fault. Max. load 250 V, 5 A.

Integrated motor protection function
Connection possibility for thermostats “TB”

Acontrol, universal controller with bypass main switch
1~ 230V 50/60Hz

Type	Article no.	Rated current	Rated temperature	Max. line fuse	Max. heat dissipation	Maximum ambient temperature	Protection class	Weight	Dimensions (W x H x D)
		A	°C	A	W	°C		kg	mm
PXET6Q	303612	6	45	10	20	55	IP54	2.20	223 x 200 x 131
PXET10Q	303613	10	40	16	40	55		2.30	240 x 284 x 132

Electronic voltage controllers

1~ Acontrol, universal controller with high rated current



These versions do not have any controls on the front of the device. Commissioning is through internal dip switches, potentiometer or jumper. Along with higher rated current, these devices also have a wide voltage range.

Input for sensors or speed settings through

0-10V — Setting of the desired speed through device or by external default, e.g. 0…10 V

0-30 0-50 bar — Connecting pressure sensors (refrigeration), e.g. type MBG.. sensors, measuring range 0...30 bar, 0...50 bar

°C — Connection of thermistors,
e. g. sensors type TF..
e. g. active sensor type MTG..

△Pa — Connecting differential pressure sensors (air conditioning), e.g. type DSG.. sensors, measuring range 0...6000 Pa, acquisition of volume flows up to 65000 m³/h

m / s — Connecting air velocity sensors, e.g. type MAL.. sensors, measuring range 0...1 m/s, 0...10 m/s

CO_2 % °C — Connecting additional sensors, e.g. combination sensors, CO_2, sensor signal 0...10 V / 0...20 mA / 4...20 mA

Connection diagram

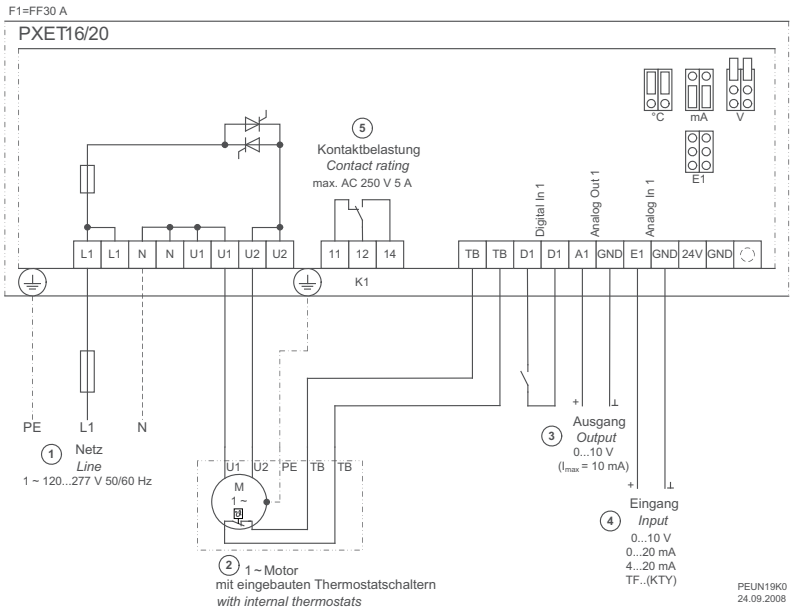

① Line
② 1~ Motor with integrated thermostats
③ Output
④ Input
⑤ Contact load

Standard conformity

Interference emission according to EN 61000-6-3 (domestic)
Interference immunity according to EN 61000-6-2 (industrial)

Equipment/Properties

Simple commissioning:
This takes place by Dip switches, potentiometers or jumpers.
By setting the Dip switches accordingly, the desired device function (operating modes: speed controller, temperature or pressure controller) can be set. The setpoint setting is made by potentiometers.

An analog input for sensors or setting signal
Analog input E1: Setting/activation by selection of the operating mode (Dip switches, jumpers) e.g. 0-10 V, 4-20 mA. In operation as a controller connection of the appropriate sensor.

1 digital input D1
For connection of an external, potential-free contact.
Enable function On/Off, external reset after motor fault, control function reversal, e.g. heating, cooling

1 analog output A1
Output signal proportional to modulation or constant voltage +10 V (max. 10 mA) for connection of an external potentiometer for speed setting

1 potential-free fault indication relay K1:
The relay drops out in the event of a fault. Max. load 250 V, 5 A.

Integrated motor protection function
Connection possibility for thermostats “TB”

Acontrol, universal controller with high rated current
1~ 120…277V 50/60Hz

Type	Article no.	Rated voltage	Rated current	Rated temperature	Max. line fuse	Max. heat dissipation	Maximum ambient temperature	Protection class	Weight	Dimensions (W x H x D)
		V	A	°C	A	W	°C		kg	mm
PXET16	303598	230	16	55	20	25	55	IP54	1.90	240 x 284 x 115
PXET20	303599	230	20	55	25	30	55		2.30	240 x 284 x 115

Electronic voltage controllers

1~ Acontrol, temperature controller with display and bypass main switch



These versions are ideal for stable climate control in agriculture or for classic temperature-dependent air supply and ventilation jobs. These devices have a multifunctional display used for programming and to display the measured values. A bypass main switch is integrated which provides a facility to bypass the internal device electronics. In the bypass position, the applied line voltage is switched directly to the output.
A room temperature sensor in IP54 is included in the scope of delivery.

Input for sensors or speed settings through

Connecting temperature sensors,
sensor for input 1, type TFR included in scope of supply
Sensor for input 2, optional

Connection diagram

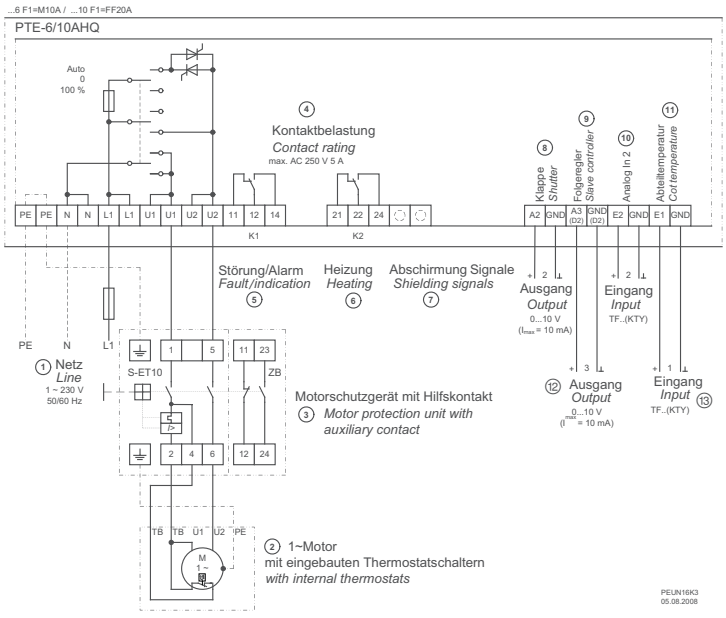

① Line
② 1~ Motor with integrated thermostats
③ Motor protection unit with auxiliary contact
④ Contact rating
⑤ Fault/Alarm
⑥ Heating
⑦ Shielding signals
⑧ Shutter
⑨ Slave controller
⑩ Analogue In 2
⑪ Compartment temperature
⑫ Output
⑬ Input

Standard conformity

Interference emission according to EN 61000-6-3 (domestic)
Interference immunity according to EN 61000-6-2 (industrial)

Equipment/Characteristic

LC-Multifunctional display with plain text display
Various menu languages can be selected

Simple commissioning:
The device menu for the temperature control regulates the setpoints for triggering the fans, controlling a ventilation damper, triggering a heater, displaying messages in case the temperature is above or below the parameters, etc.l
Adjustable setpoint range: 0-40 °C

Input for temperature sensors:
Analogue input E1: Connection for room temperature sensor (included in scope of delivery)
Analogue input E2: Connection facility for an air-supply temperature sensor type TF…, or alternatively as a sensor for dampers or heating control possible

2 analogue outputs
Analogue output A2: to control a ventilation damper
Analogue output A3: as a follow-up controller or to control a heater.

2 digital outputs (relays) K1 and K2
K1: alarm relay, message in case the temperature is above or below set parameters.
K2: K2: Relay to controll a heater
K1 + K2 max. load with 250 V 5 A

Acontrol, function temperature controller with display and bypass main switch
1~ 230V 50/60Hz

Type	Article no.	Rated current	Rated temperature	Max. line fuse	Max. heat dissipation	Maximum ambient temperature	Protection class	Weight	Dimensions (W x H x D)
		A	°C	A	W	°C		kg	mm
PTE-6AHQ	**303606**	6	45	10	20	55	IP54	1.50	223 x 200 x 131
PTE-10AHQ	**303607**	10	40	16	40	55		2.50	240 x 284 x 132

Electronic voltage controllers

1~ Acontrol, temperature controller with bypass main switch



These versions are ideal for stable climate control in agriculture or for classic temperature-dependent air supply and ventilation jobs. A rotary knob is integrated in the front of the device to set the setpoint temperature. The illuminated display in the rotary knob indicates the operating condition. A bypass main switch is integrated, providing a facility to bypass the internal device electronics. In the bypass position, the applied line voltage is switched directly to the output.
A room temperature sensor in IP54 is included in the scope of delivery.

Input for sensors or speed settings through

Connection of thermistors,
Sensor for input 1, type TFR included in the scope of supply

Connection diagram

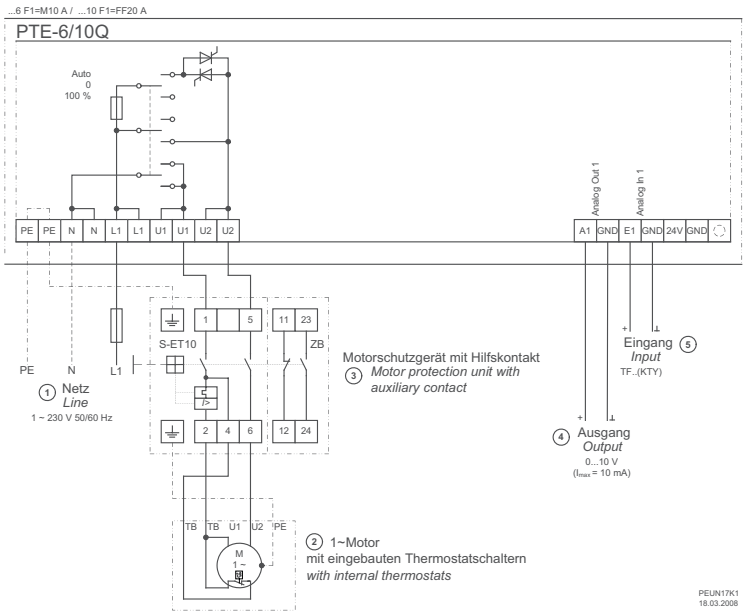

① Line
② 1~ Motor with integrated thermostats
③ Motor protection unit with auxiliary contact
④ Output
⑤ Input

Standard conformity

Interference emission according to EN 61000-6-3 (domestic)
Interference immunity according to EN 61000-6-2 (industrial)

Equipment/Characteristics

Simple commissioning:
Set the desired temperature setpoint via a rotary knob. Setpoint 0...40 °C (or alternatively -26…+ 76 °C). Additional settings possible with internal potentiometer and dip switch.

Input for temperature sensors:
Analogue input E1: Connection for room temperature sensor (included in scope of delivery)

1 analogue output A1
Control for follow-up controller

Acontrol, temperature controller with bypass main switch
1~ 230V 50/60Hz

Type	Article no.	Rated current	Rated temperature	Max. line fuse	Max. heat dissipation	Maximum ambient temperature	Protection class	Weight	Dimensions (W x H x D)
		A	°C	A	W	°C		kg	mm
PTE-6Q	**303618**	6	45	10	20	55	IP54	1.30	223 x 200 x 131
PTE-10Q	**303619**	10	40	16	40	55		2.30	240 x 284 x 132

Electronic voltage controllers

1~ Acontrol, speed controller or pressure/temperature controller



These versions are primarily used as speed controllers. They are beneficial for upstream control applications or if the device is combined with control modules from the ZIEHL-ABEGG UNIcon product family.
Depending on the device version, speeds can be pre-set. They can also be set to second stage operation with external switchover, or implemented via an external potentiometer.
The Acontrol voltage control devices also provide an option to control based on temperature or pressure (for example, refrigerant pressure in cooling equipment).

Input for sensors or speed settings through

0-10V — Setting of the desired speed through device or by external default, e.g. 0…10 V

0-30 0-50 bar — Connecting pressure sensors (refrigeration), e.g. type MBG.. sensors, measuring range 0...30 bar, 0...50 bar

°C — Connection of thermistors,
e. g. sensors type TF..
e. g. active sensor type MTG..

CO_2 % °C — Connecting additional sensors, e.g. combination sensors, CO_2, sensor signal 0...10 V / 0...20 mA / 4...20 mA

Connection diagram

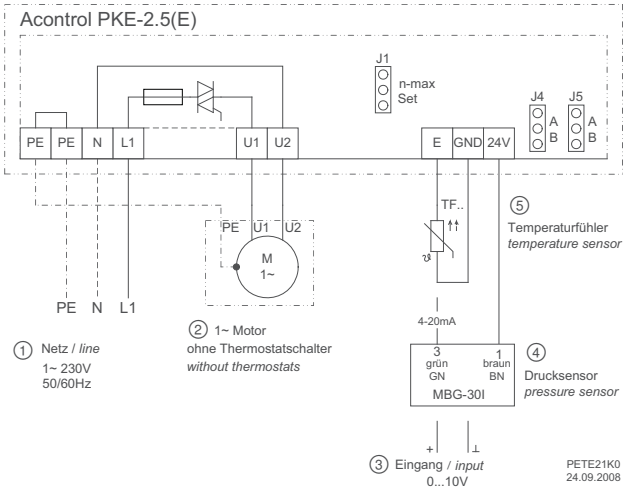

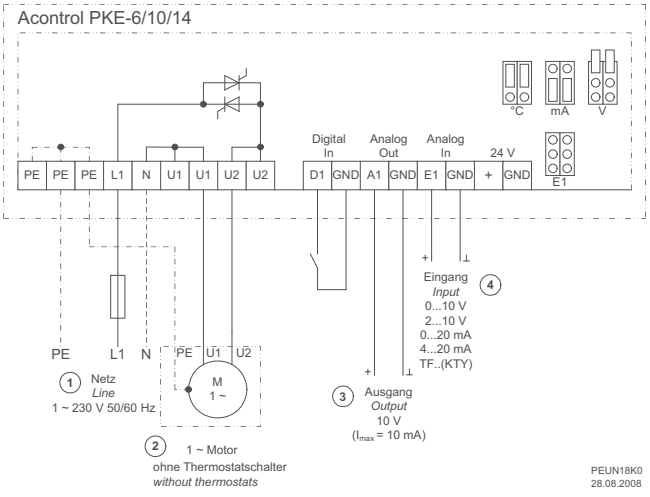

① Line
② 1~ Motor without thermostats
③ Input
④ Pressure sensor
⑤ Thermistor

① Line
② 1~ Motor without thermostats
③ Output
④ Input

Standard conformity

Interference emission according to EN 61000-6-3 (domestic)
Motor line not shielded
Interference immunity according to EN 61000-6-2 (industrial)

Equipment/Characteristics

Simple commissioning:
Depending on the device version, commissioning through dip switch, potentiometer or jumper.
Set the corresponding dip switch to implement the desired device function (operating modes: speed controller, temperature or pressure controller). Set the setpoint default via potentiometer.

One analogue input for sensors or default signal
Analogue input E: Set/enable by selecting the operating mode (dip switch, jumper) e.g. 0-10 V, 4-20 mA. When operating as controller connection of corresponding sensor.

1 digital inputs D1
(only for versions 6-14 A):
For connecting an external, floating contact.
D1: enable function On/Off

1 analogue output A1
(only for versions 6-14 A):
Output signal proportional modulation or constant voltage +10 V (max. 10 mA) to connect an external potentiometer for speed preset

Acontrol, speed controller or pressure/temperature controller for cooling
1~ 230V 50/60Hz

Type	Article no.	Rated current	Rated temperature	Max. line fuse	Max. heat dissipation	Maximum ambient temperature	Protection class	Weight	Dimensions (W x H x D)
		A	°C	A	W	°C		kg	mm
PKE-2.5E	303620	2.5	40	10	10	40	IP20	0.26	93 x 96 x 42
PKE-2.5	303600	2.5	40	10	10	40	IP54	0.45	100 x 190 x 75
PKE-6	303614	6	40	10	15	55		0.60	100 x 190 x 75
PKE-10	303615	10	40	16	25	55		0.90	100 x 190 x 75
PKE-14	303625	14	40	20	35	55		2.00	240 x 284 x 115

Acontrol, speed controller or pressure/temperature controller for heating
1~ 230V 50/60Hz

Type	Article no.	Rated current	Rated temperature	Max. line fuse	Max. heat dissipation	Maximum ambient temperature	Protection class	Weight	Dimensions (W x H x D)
		A	°C	A	W	°C		kg	mm
PKE-2.5E	303622	2.5	40	10	10	40	IP20	0.26	93 x 96 x 42

Electronic voltage controllers

1~ Acontrol, PID controller for e.g. differential pressure, air velocity



These versions are ideal especially suitable for the differential pressure control in refrigeration technology (control of roof fans, central ventilation systems) or for air velocity control (constant airflow in clean rooms).
The integrated voltage supply +24 V, max. 65 mA, is designed to connect differential pressure or air velocity sensors.

Input for sensors or speed settings through

△Pa — Connecting differential pressure sensors (air conditioning), e.g. type DSG.. sensors, measuring range 0...6000 Pa, acquisition of volume flows up to 65000 m³/h

m / s — Connecting air velocity sensors, e.g. type MAL.. sensors, measuring range 0...1 m/s, 0...10 m/s

Acontrol, PID controller for, e.g., differential pressure, air velocity
1~ 230V 50/60Hz

Type	Article no.	Rated current	Rated temperature	Max. line fuse	Max. heat dissipation	Maximum ambient temperature	Protection class	Weight	Dimensions (W x H x D)
		A	°C	A	W	°C		kg	mm
PDE-6	303623	6	40	10	15	55	IP54	0.60	100 x 190 x 75
PDE-10	303624	10	40	16	25	55		0.80	100 x 190 x 75

Connection diagram

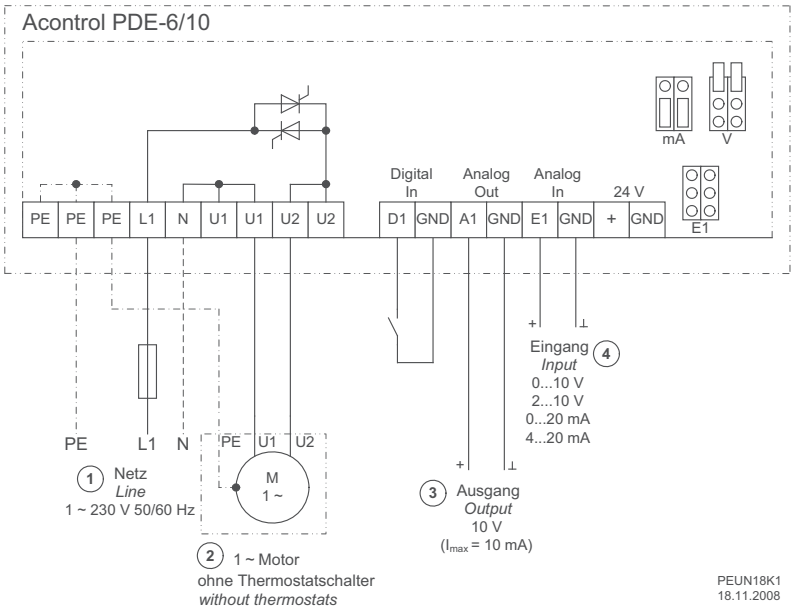

① Line
② 1~ Motor without thermostats
③ Output
④ Input

Electronic voltage controllers

1~ speed controller with rotary knob



These devices for continuous speed control of one or more voltage-controlled 1~ fans have a knob installed at the front. This knob sets the desired speed. The speed controller starts with maximum output voltage for safe start-up of the fan.
An integrated operating indicator lamp shows the operating state of the speed controller.
Versions up to 4 Ampere:
Integrated switch function with the knob. One switched output for max. 1 Ampere.
Versions 6 and 10 Ampere:
Side integrated switch. One switched output for max. 6 Ampere.

Acontrol, function temperature controller with display and bypass main switch
1~ 230V 50/60Hz

Type	Article no.	Rated current	Rated temperature	Maximum ambient temperature	Protection class	Weight	Dimensions (W x H x D)
		A	°C	°C		kg	mm
P-E-1	303586	1	35	35	IP54 / IP44	0.24	82 x 82 x 65
P-E-2.5	303587	2.5	35	35		0.30	82 x 82 x 65
P-E-4	303588	4	35	35	IP54	0.36	82 x 82 x 65
P-E-6	303589	6	35	35		0.68	127 x 202 x 96
P-E-10	303590	10	35	35		0.74	127 x 202 x 96

Connection diagram

P-E-1...4

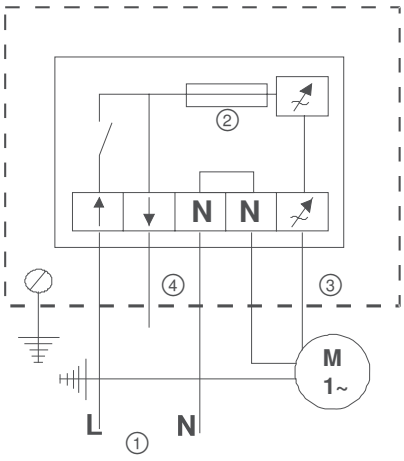

P-E-6/10

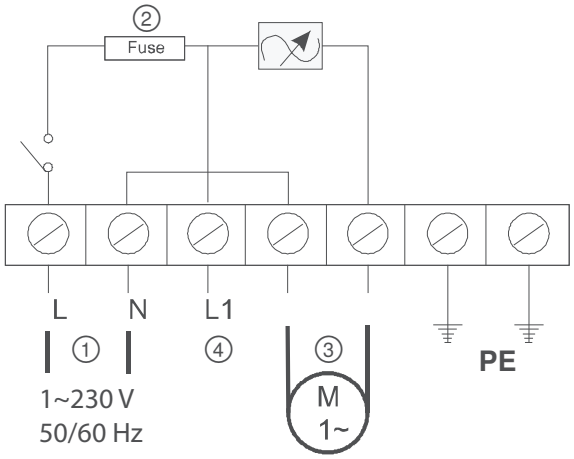

① Mains connection: 1~230 V, 50/60 Hz
② Built-in fuse
③ Controlled output to the motor
④ Uncontrolled output 230 V, or bridging of the ON/OFF contact

Electronic voltage controllers

3~ Ucontrol, universal controller with display



Most ZIEHL-ABEGG external rotor motors are voltage controllable. For simple and cost-effective speed control of these motors or fans, electronic voltage controllers can be supplied.

For the various applications in refrigeration, air-conditioning and general ventilation technology we supply universal devices from the Ucontrol product family.

These universal control devices also provide an option to control based on temperature, pressure (for example refrigerant pressure in cooling equipment), differential pressure in ventilation systems, or other physical factors.

The Ucontrol universal devices are ideal for following applications: refrigeration, air conditioning, agriculture, general air supply and ventilation jobs, clean room technology. By selecting pre-programmed operating modes, fast commissioning for typical applications in the stated sectors is possible.

Input for sensors or speed settings through

0-10V — Setting of the desired speed through device or by external default, e.g. 0…10 V

0-30 0-50 bar — Connecting pressure sensors (refrigeration), e.g. type MBG.. sensors, measuring range 0...30 bar, 0...50 bar

°C — Connection of thermistors,
e. g. sensors type TF..
e. g. active sensor type MTG..

△Pa — Connecting differential pressure sensors (air conditioning), e.g. type DSG.. sensors, measuring range 0...6000 Pa, acquisition of volume flows up to 65000 m³/h

m / s — Connecting air velocity sensors, e.g. type MAL.. sensors, measuring range 0...1 m/s, 0...10 m/s

CO_2 % °C — Connecting additional sensors, e.g. combination sensors, CO_2, sensor signal 0...10 V / 0...20 mA / 4...20 mA

Connection diagram

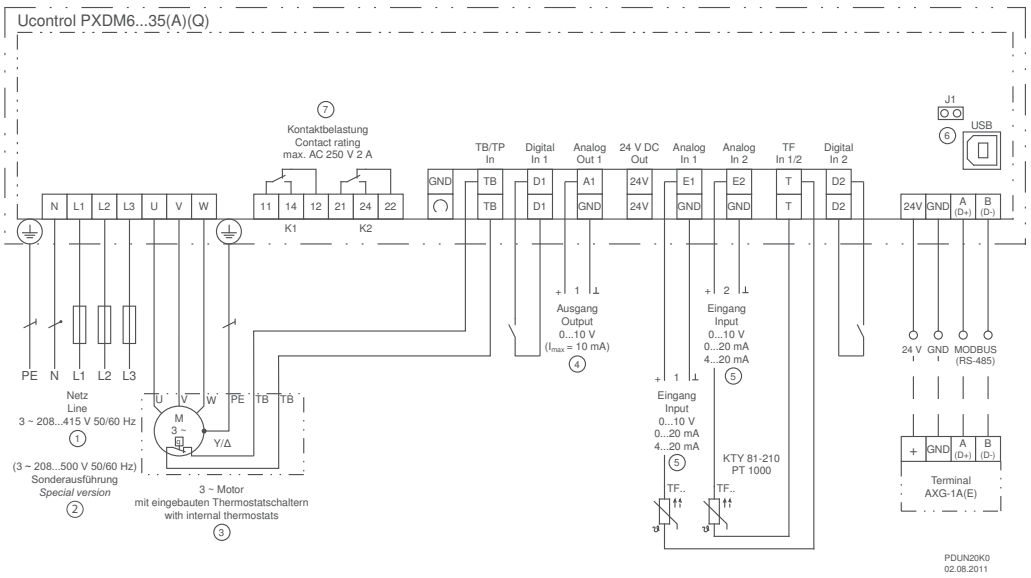

① Line
② Special version
③ 3~ motor with built-in thermostats
④ Output
⑤ Input
⑥ Jumper for boot loader
⑦ Contact load

Standard conformity

Interference emission according to EN 61000-6-3 (domestic)
Interference immunity according to EN 61000-6-2 (industrial)

Equipment/properties

LC multi-function display with plain text display:
Different menu languages can be selected

Simple start-up by operating modes:
Typical operating modes, e.g. for air conditioning, refrigerant or ventilation technology can be selected.

Simple programmability:
Typical settings can be made easily: e.g. minimum speed setting, limitation of the maximum speed, inversions and limits. Setting, e.g. for 2-step mode

2 analog inputs for sensors or setting signals:
analog input E1 and E2: Setting by operating modes or manually programmable, e.g. 0-10 V, 0-20 mA, 4-20 mA
analog input E2: programmable, e.g. comparison with sensor 1, difference to sensor 1, average value formation, setpoint setting, setpoint adaptation (e.g. outdoor temperature-dependent)

2 digital inputs D1 und D2:
Programmable, e.g. enable, switch over setpoint 1 or 2, switch over control or manual mode, switch over E1 or E2, invert control function, output limitation, display external fault, reset

1 analog output A1:
Setting by operating modes or manually programmable, e.g. output signal proportional to modulation, output signal proportional to input signal, invertible, 10 V constant voltage, group control

2 digital outputs (relays) K1 and K2:
Setting by operating modes or manually programmable, e.g. operating indication, fault indication, limits, external fault at digital input, activation of external devices, e.g. heating, shutters, group control, fans, etc.

Integrated motor protection function:
Connection possibility for PTC thermistors or alternatively thermostats (TB or TP).

Interface RS485 MODBUS RTU:
Integration into bus system

Interface USB:
For e.g. software update, communication with PC (not for devices 50, 80 Ampere / not integrated in UL devices)

Set protection:
Activation set protection against unauthorised access, restoration of made settings

Event memory:
Querying of occurred events, operating times, etc.

Optional equipment

IO add-on module type Z-Modul-B, Article No. **380052**
if the integrated inputs and outputs are not sufficient
other inputs and outputs can be created with the Z-Modul-B
. These are also programmable:
1 analog input
1 analog output
3 digital inputs
2 digital outputs (relays)

LON® Add-on module type Z-Modul-L, Article No. **380086**

Ucontrol, universal controller with display
3~ 208...415V 50/60Hz

Type	Article no.	Rated voltage	Rated current	Rated temperature	Max. line fuse	Max. heat dissipation	Maximum ambient temperature	Protection class	Weight	Dimensions (W x H x D)
		V	A	°C	A	W	°C		kg	mm
PXDM6A	304594	400	6	40	10	30	55	IP54	2.25	240 x 284 x 115
PXDM10A	304595		10	45	16	50	55		2.75	240 x 284 x 115
PXDM12A	304596		12	40	16	75	55		3.65	270 x 323 x 146
PXDM15A	304597		15	40	20	100	55		4.95	270 x 323 x 146
PXDM20A	304598		20	45	25	200	55		5.50	250 x 302 x 195.5
PXDM25A	304599		25	45	35	270	55		11.10	280 x 355 x 239
PXDM35A	304600		35	50	50	440	55		11.15	280 x 355 x 239
PXDM50A	305567		50	40	63	170	55		20.00	386 x 525 x 283
PXDM80A	305568		80	40	100	270	55		21.00	386 x 525 x 283
PXDM25AE	304624		25	50	35	260	55	IP20	7.65	246 x 362 x 180
PXDM35AE	304625		35	50	50	430	55		7.75	246 x 362 x 180
PXDM50AE	305592		50	50	63	160	55		13.80	336 x 471 x 220
PXDM80AE	305593		80	50	100	255	55		15.40	336 x 471 x 220

Devices with a rated temperature below 55 °C can be used up to 55 °C with a reduction in performance.

Ucontrol, universal controller without display
3~ 208...415V 50/60Hz

Type	Article no.	Rated voltage	Rated current	Rated temperature	Max. line fuse	Max. heat dissipation	Maximum ambient temperature	Protection class	Weight	Dimensions (W x H x D)
		V	A	°C	A	W	°C		kg	mm
PXDM6	304620	400	6	40	10	30	55	IP54	2.20	240 x 284 x 115
PXDM10	304621		10	45	16	50	55		2.70	240 x 284 x 115

Devices with a rated temperature below 55 °C can be used up to 55 °C with a reduction in performance.

Ucontrol, universal controller for increased ambient temperature with display
3~ 208...415V 50/60Hz

Type	Article no.	Rated voltage	Rated current	Rated temperature	Max. line fuse	Max. heat dissipation	Maximum ambient temperature	Protection class	Weight	Dimensions (W x H x D)
		V	A	°C	A	W	°C		kg	mm
PXDM6AZ	304607	400	6	50	10	25	55	IP54	2.25	240 x 284 x 115
PXDM10AZ	304608		10	50	16	45	55		2.75	240 x 284 x 115
PXDM12AZ	304609		12	50	16	70	55		3.65	270 x 323 x 146
PXDM15AZ	304610		15	50	20	95	55		4.95	270 x 323 x 146
PXDM20AZ	304611		20	50	25	190	55		5.50	250 x 302 x 195.5
PXDM25AZ	304612		25	50	35	260	55		11.10	280 x 355 x 239
PXDM35AZ	304613		35	55	50	430	55		11.15	280 x 355 x 239
PXDM50AZ	305586		50	50	63	160	55		18.60	386 x 525 x 283
PXDM80AZ	305587		80	50	100	255	55		19.60	386 x 525 x 283

Devices with a rated temperature below 55 °C can be used up to 55 °C with a reduction in performance.

Electronic voltage controllers

3~ Ucontrol, universal controller with display and bypass main switch



Most ZIEHL-ABEGG external rotor motors are voltage controllable. For simple and cost-effective speed control of these motors or fans, electronic voltage controllers can be supplied.

For the various applications in refrigeration, air-conditioning and general ventilation technology we supply universal devices from the Ucontrol product family.

These universal control devices also provide an option to control based on temperature, pressure (for example refrigerant pressure in cooling equipment), differential pressure in ventilation systems, or other physical factors.

The Ucontrol universal devices are ideal for following applications: refrigeration, air conditioning, agriculture, general air supply and ventilation jobs, clean room technology. By selecting pre-programmed operating modes, fast commissioning for typical applications in the stated sectors is possible.

These versions have an additionally integrated bypass main switch. This offers the possibility of bypassing the internal device electronics. In the bypass position, the applied line voltage is switched directly to the output.

Input for sensors or speed settings through

0-10V — Setting of the desired speed through device or by external default, e.g. 0…10 V

0-30 0-50 bar — Connecting pressure sensors (refrigeration), e.g. type MBG.. sensors, measuring range 0...30 bar, 0...50 bar

°C — Connection of thermistors,
e. g. sensors type TF..
e. g. active sensor type MTG..

△Pa — Connecting differential pressure sensors (air conditioning), e.g. type DSG.. sensors, measuring range 0...6000 Pa, acquisition of volume flows up to 65000 m^3/h

m / s — Connecting air velocity sensors, e.g. type MAL.. sensors, measuring range 0...1 m/s, 0...10 m/s

CO_2 % °C — Connecting additional sensors, e.g. combination sensors, CO_2, sensor signal 0...10 V / 0...20 mA / 4...20 mA

Ucontrol, universal controller with display and bypass main switch
3~ 208…415V 50/60Hz

Type	Article no.	Rated voltage	Rated current	Rated temperature	Max. line fuse	Max. heat dissipation	Maximum ambient temperature	Protection class	Weight	Dimensions (W x H x D)
		V	A	°C	A	W	°C		kg	mm
PXDM6AQ	**304614**	400	6	40	10	30	55	IP54	2.55	240 x 284 x 132
PXDM10AQ	**304615**		10	45	16	50	55		3.05	240 x 284 x 132
PXDM12AQ	**304616**		12	40	16	75	55		4.00	270 x 323 x 162
PXDM15AQ	**304617**		15	40	20	100	55		5.30	270 x 323 x 162
PXDM25AQ	**304618**		25	45	35	270	55		11.40	280 x 355 x 256
PXDM35AQ	**304619**		35	50	50	440	55		11.45	280 x 355 x 256
PXDM50AQ	**305508**		50	40	63	170	55		20.70	386 x 525 x 299.5
PXDM80AQ	**305509**		80	40	100	270	55		22.80	386 x 525 x 299.5

Devices with a rated temperature below 55 °C can be used up to 55 °C with a reduction in performance.

Electronic voltage controllers

3~ Dcontrol, speed controller or pressure/temperature controller



These versions are
primarily used as speed controllers.This is beneficial for upstream control applications or when the devices are combined with control modules from the ZIEHL-ABEGG UNIcon product family. Alternatively, speeds can be pre-set. They can also be set to second stage operation with external switchover, or implemented via an external potentiometer.The Dcontrol voltage controllers also provide an option to control based on temperature or pressure (for example, refrigerant pressure in cooling equipment).

Input for sensors or speed settings through



Setting of the desired speed through device or by external default, e.g. 0…10 V



Connecting pressure sensors (refrigeration),
e.g. type MBG.. sensors, measuring range 0...30 bar, 0...50 bar



Connection of thermistors,
e. g. sensors type TF..
e. g. active sensor type MTG..

Connection diagram

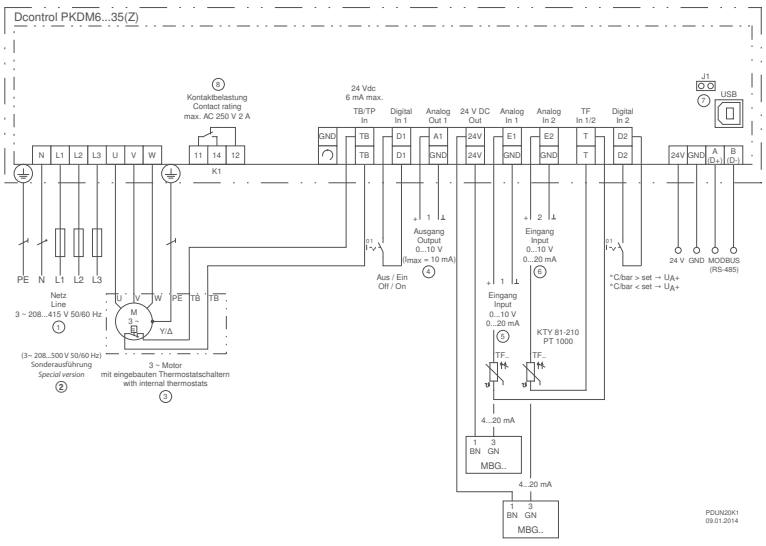

① Netz 3~ 208..415 V 50/60 Hz
② Special version UL 3~ 208...500 V 50/60 Hz
③ 3~ motor motor with built-inthermostats
④ Output
⑤ Input
⑥ Input
⑦ USB interface
⑧ Contact load

Standard conformity

Interference emission according to EN 61000-6-3 (domestic)
Interference immunity according to EN 61000-6-2 (industrial)

Equipment/Characteristics

Simple commissioning with dip switch and potentiometer:
The controls are accessible directly in the device terminal compartment. Set the dip switch to select the desired device function (operating modes: speed controller, temperature, or pressure controller). The setpoint preset is set with the potentiometer.

Two analogue inputs for sensors or default signal
Analogue input E1 and E2: Set/enable by selecting the operating mode (dip switch), e.g., 0-10 V, 4-20 mA. When operating as a controller, e.g. connection of two sensors for controlling the higher value (e.g., two-loop condenser)

2 digital inputs D1 and D2
For connecting an external, floating contact.
D1: Enable function On/Off
D2: Reverse the control function, e.g. heating, cooling

1 analogue output A1:
Output signal proportional modulation or constant voltage
+10 V (max. 10 mA) to connect an external potentiometer for speed prese

1 floating alarm relay K1:
During a fault, the relay drops out. Max. load 250 V, 2 A.

Integrated motor protection function
Connection facility for thermostat “TB” or thermistor “TP”

Interface RS485 MODBUS RTU
Connection to bus system

Interface USB
e.g. for software update, communication with PC
(not on 50, 80 Ampere devices)

Dcontrol, speed controller or pressure/temperature controller
3~ 208...415V 50/60Hz

Type	Article no.	Rated voltage	Rated current	Rated temperature	Max. line fuse	Max. heat dissipation	Maximum ambient temperature	Protection class	Weight	Dimensions (W x H x D)
		V	A	°C	A	W	°C		kg	mm
PKDM6	**304587**	400	6	40	10	30	55	IP54	2.20	240 x 284 x 115
PKDM10	**304588**		10	45	16	50	55		2.70	240 x 284 x 115
PKDM12	**304589**		12	40	16	75	55		3.60	270 x 323 x 146
PKDM15	**304590**		15	40	20	100	55		4.90	270 x 323 x 146
PKDM20	**304591**		20	45	25	200	55		5.45	250 x 302 x 195.5
PKDM25	**304592**		25	45	35	270	55		11.05	280 x 355 x 239
PKDM35	**304593**		35	50	50	440	55		11.10	280 x 355 x 239
PKDM50	**305563**		50	40	63	170	55		19.50	386 x 525 x 283
PKDM80	**305564**		80	40	100	270	55		20.50	386 x 525 x 283
PKDM25E	**304622**		25	50	35	260	55	IP20	7.40	246 x 362 x 180
PKDM35E	**304623**		35	50	50	430	55		7.50	246 x 362 x 180
PKDM50E	**305588**		50	50	63	160	55		13.80	336 x 471 x 220
PKDM80E	**305589**		80	50	100	255	55		15.40	336 x 471 x 220

Devices with a rated temperature below 55 °C can be used up to 55 °C with a reduction in performance.

Dcontrol, speed controller or pressure/temperature controller for increased ambient temperature
3~ 208...415V 50/60Hz

Type	Article no.	Rated voltage	Rated current	Rated temperature	Max. line fuse	Max. heat dissipation	Maximum ambient temperature	Protection class	Weight	Dimensions (W x H x D)
		V	A	°C	A	W	°C		kg	mm
PKDM10Z	**304601**	400	10	50	16	45	55	IP54	2.70	240 x 284 x 115
PKDM12Z	**304602**		12	50	16	70	55		3.60	270 x 323 x 146
PKDM15Z	**304603**		15	50	20	95	55		4.90	270 x 323 x 146
PKDM20Z	**304604**		20	50	25	190	55		5.45	250 x 302 x 195.5
PKDM25Z	**304605**		25	50	35	260	55		11.05	280 x 355 x 239
PKDM35Z	**304606**		35	55	50	430	55		11.10	280 x 355 x 239
PKDM50Z	**305578**		50	50	63	160	55		18.10	386 x 525 x 283
PKDM80Z	**305579**		80	50	100	255	55		19.10	386 x 525 x 283

Devices with a rated temperature below 55 °C can be used up to 55 °C with a reduction in performance.

Electronic voltage controllers

3~ Dcontrol, with UL certification



The following device versions are available with UL certification.
Due to the large wide voltage range of 208-500 V
they can be used in numerous applications.

Input for sensors or speed settings through

0-10V

Setting of the desired speed through device or by external default,
e.g. 0…10 V

0-30
0-50
bar

Connecting pressure sensors (refrigeration),
e.g. type MBG.. sensors, measuring range 0...30 bar, 0...50 bar

°C

Connection of thermistors,
e. g. sensors type TF..
e. g. active sensor type MTG..

Connection diagram

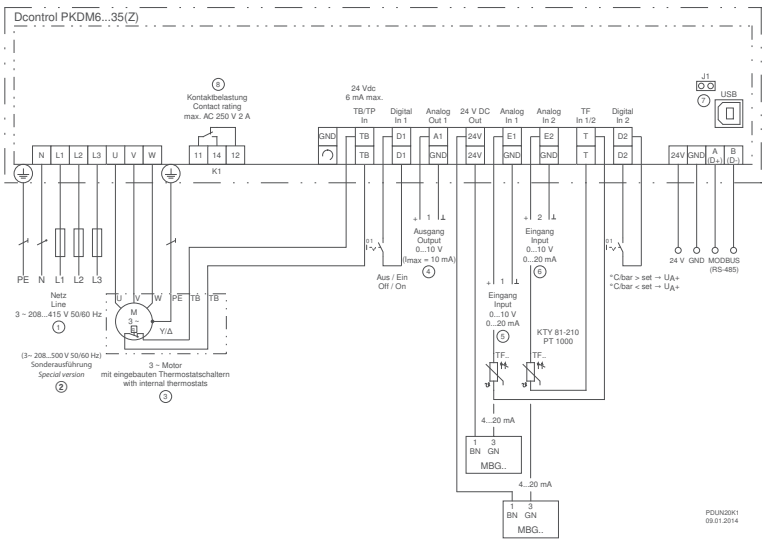

① Netz 3~ 208..415 V 50/60 Hz
② Special version UL 3~ 208...500 V 50/60 Hz
③ 3~ motor motor with built-inther-mostats
④ Output
⑤ Input
⑥ Input
⑦ USB interface
⑧ Contact load

Dcontrol, with UL certification 3~ 208...500V 50/60Hz										
Type	**Article no.**	Rated voltage V	Rated current A	Rated tempera-ture °C	Max. line fuse A	Max. heat dissipation W	Maximum ambient temperature °C	Protec-tion class	Weight kg	Dimensions (W x H x D) mm
PKDM10 (500V)	**304628**	500	10	45	16	50	55	IP54	2.80	240 x 284 x 115
PKDM15 (500V)	**304629**	500	15	40	20	100	55		5.00	270 x 323 x 146
PKDM25 (500V)	**304630**	500	25	45	35	270	55		11.20	280 x 355 x 239

Devices with a rated temperature below 55 °C can be used up to 55 °C with a reduction in performance.

Electronic voltage controllers

3~ Dcontrol, basic device for 5 amps



Version PKDT5 can be supplied for a maximum of 5 A rated current. The device is designed for a 400-415 V line voltage and is a cost-effective alternative to devices with a larger voltage range.

Input for sensors or speed settings through



Setting of the desired speed through device or by external default, e.g. 0…10 V



Connecting pressure sensors (refrigeration), e.g. type MBG.. sensors, measuring range 0...30 bar, 0...50 bar



Connection of thermistors,
e. g. sensors type TF..
e. g. active sensor type MTG..

Dcontrol, basic device for 5 amps
3~ 415V 50/60Hz

Type	Article no.	Rated current	Rated temperature	Max. line fuse	Max. heat dissipation	Maximum ambient temperature	Protection class	Weight	Dimensions (W x H x D)
		A	°C	A	W	°C		kg	mm
PKDT5	**304555**	5	40	10	25	55	IP54	2.92	240 x 284 x 115

Connection diagram

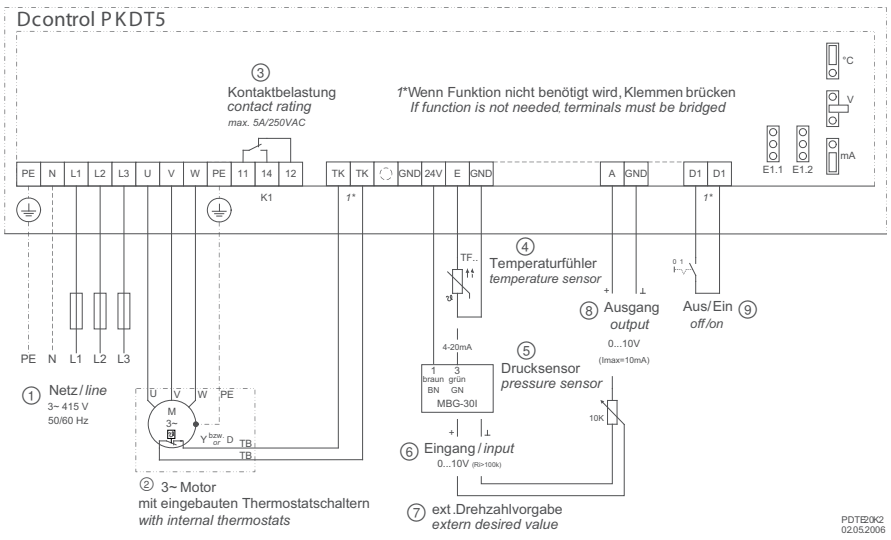

① Line
② 3~ Motor with integrated thermostats
③ Contact rating
④ Temperature sensors
⑤ Pressure sensor
⑥ Input
⑦ External speed setting
⑧ Output
⑨ On/Off

1* If function is not needed terminals must be bridged

Electronic voltage controllers

3~ Dcontrol, speed controller for 2 amps



Version PSDT2V can be supplied for up to maximum of 2 A rated current. The device is designed for 400 V line voltage and is soley used as a speed controller.

Input for sensors or speed settings through



Setting of the desired speed through device or by external default, e.g. 0...10 V

Dcontrol, speed controller for 2 amps
3~ 400V 50/60Hz

Type	Article no.	Rated current	Rated temperature	Max. line fuse	Max. heat dissipation	Maximum ambient temperature	Protection class	Weight	Dimensions (W x H x D)
		A	°C	A	W	°C		kg	mm
PSDT2V	**304500**	2	40	6	10	55	IP54	1.00	166 x 230 x 118

Connection diagram

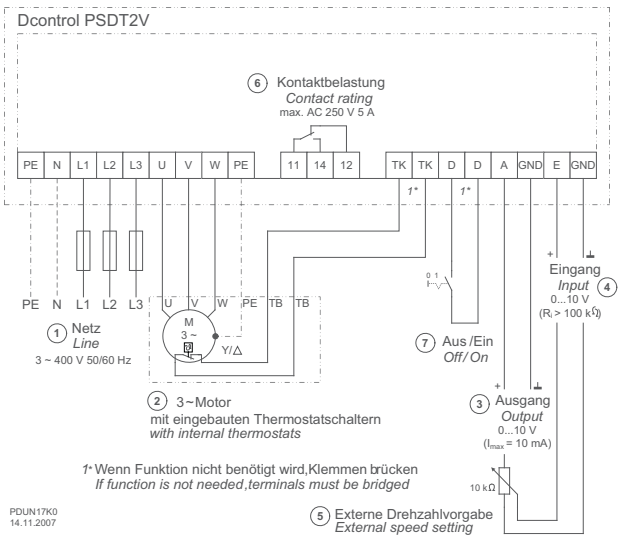

① Line
② 3~ Motor with integrated thermostats
③ Output
④ Input
⑤ External speed setting
⑥ Contact rating

1* If function is not needed, terminals must be bridged

Motor protection units

For monitoring thermostats (TB)



Complete motor protection is implemented by connecting the thermostat, which is integrated into the motor, to the motor protection unit. Most ZIEHL-ABEGG external rotor motors are equipped with thermostats (TB) in the winding. These thermostats open during high winding temperatures, facilitating the direct monitoring of the temperature in the motor, thus ensuring the direct protection of the motor.When the thermostat opens, the motor protection unit is triggered and has to be manually reset; this is done to prevent an unwanted reconnection after the motor has cooled off.

Additional functions of the 3~ STDT motor protection units:
They have an overcurrent trigger integrated. That means the device acts like a fuse and can be used for “current distribution”. The adjustable overcurrent trigger protects the cable leading to the connected motors. Dual terminals located on the input and output sides of the motor protection unit facilitate simple wiring of multiple motors or fans on the output side of a powerful controller.

Anschlussplan S-ET

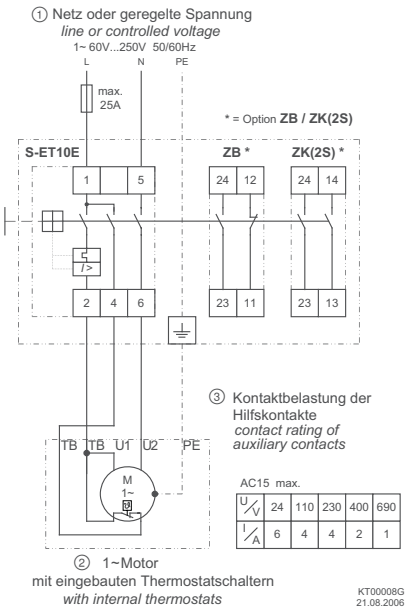

① Line or controlled voltage
② 3~ motor with integrated thermostats
③ Contact load of auxiliary contacts

* Option ZB/ZK(2S)

Connection diagram STDT

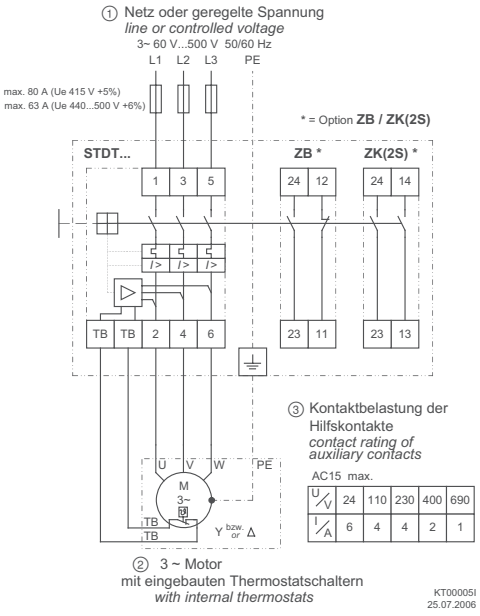

① Line or controlled voltage
② 1~ motor with integrated thermostats
③ Contact load of auxiliary contacts

* Option ZB/ZK(2S)

Equipment/Characteristics

Complete motor protection
Automatic shut-off when connected thermostat „TB“ opens (direct temperature monitoring in the motor winding).

Integrated button
Switch connected motors on and off manually. Manual reset after motor fault (protection from unwanted restarting)

Optional: operating status contact
Type “ZB” with one open contact and one close contact
Type “ZK” with two close contacts

Optional padlock feature
Type „Zrep“ for the IP55 housing version. The motor protection unit can be locked during servicing (max. 3 locks)

Cable protection (only in 3~ STDT devices)
Via integrated overcurrent trigger, which can be adjusted to the cable cross section.

Accessories

Type	Article no.	Weight kg
S-ET10E	382021	0.17
S-ET10	382020	0.44
STDT16E	382012	0.33
STDT25E	382015	0.50
STDT16	382011	0.60
STDT25	382014	0.75
ZB	382013	0.03
ZK	382022	0.03
Zrep	382025	0.11

Motor protection units for monitoring thermostats (TB)

Line	Installation	Type	Article no.	Rated current A	Overcurrent trigger	Minimum ambient temperature °C	Maximum ambient temperature °C	Protection class	Weight kg	Dimensions (W x H x D) mm
1~ 60...250V 50/60Hz	Rail according to EN 60715	S-ET10E	382021	10		-25	55	IP20	0.17	45 x 80 x 85.5
1~ 60...250V 50/60Hz	Wall mounting	S-ET10	382020	10		-25	40	IP55	0.44	80 x 150 x 97.5
3~ 60...500V 50/60Hz	Rail according to EN 60715	STDT16E	382012	16	Overcurrent 10...16 A	-25	55	IP20	0.33	54 x 80 x 85.5
3~ 60...500V 50/60Hz		STDT25E	382015	25	Overcurrent 20...25 A	-25	55		0.50	54 x 80 x 85.5
3~ 60...500V 50/60Hz	Wall mounting	STDT16	382011	16	Overcurrent 10...16 A	-25	40	IP55	0.60	80 x 150 x 97.5
3~ 60...500V 50/60Hz		STDT25	382014	25	Overcurrent 20...25 A	-25	40		0.75	80 x 150 x 97.5

Application example

Motor protection units S-ET or STDT, depending on the line. With S-ET monitoring of individual fans, with STDT monitoring of several fans per motor protection unit possible. Thermostats are wired in series.

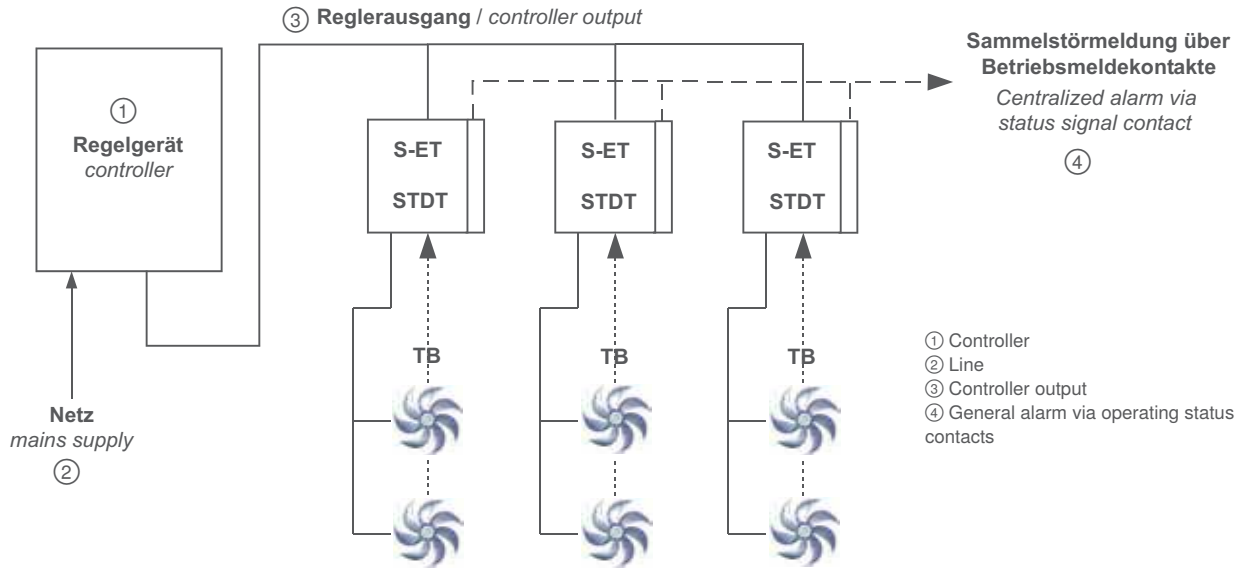

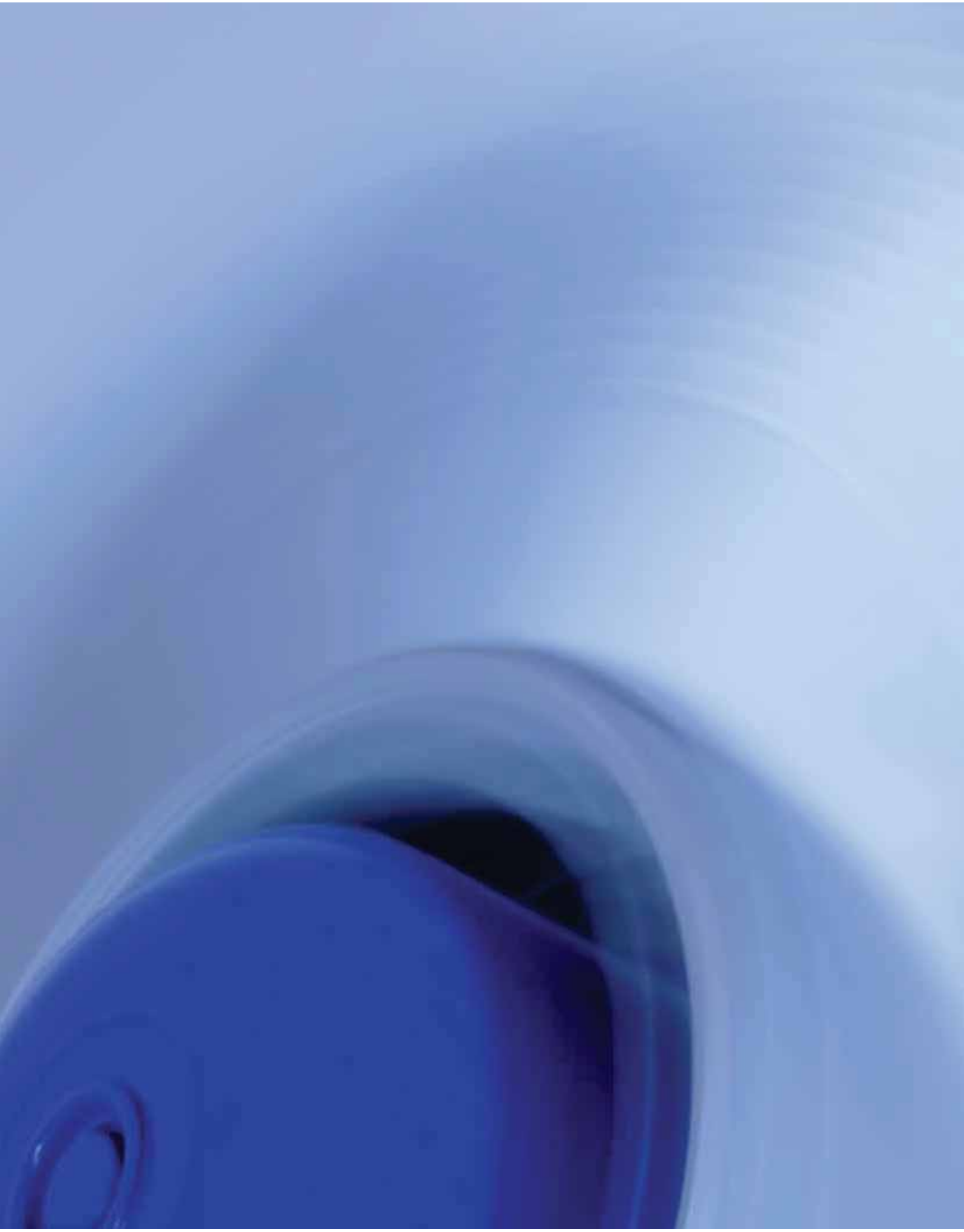

General notes

Overview

Explanation of technical details Page 522

Aerodynamics and Acoustics Page 524

Electrical connection and motor Page 527

Connection diagram Page 528

Installation and usage information Page 533

Explanation of technical details

Symbols, Units of Measure

Symbol	Unit	Description
p_{sF}	Pa	Static pressure increase
p_{fd}	Pa	Dynamic pressure
q_v	m³/h	Air flow
n_N	min-1	Rated speed
P_1	kW	Input power
P_{sys}	kW	Input power system (including controller)
U_N	V	Rated voltage
f_N	Hz	Rated frequency
I_N	A	Rated current
I_A	A	Starting current
ΔI	%	Percentage increase of current based on rated current for speed control by voltage reduction
C_{400V}	µF	Capacity
$t_{R(min)}$	°C	Minimum permitted ambient temperature
$t_{R(max)}$	°C	Maximum permitted ambient temperature
L_{WA5}	dB(A)	A-rated suction-side sound power level
η_{statA}	%	Overall efficency, static according to measurement category A at optimum duty point without losses of electronic speed control according to calculation method ErP-commission regulartion No. 327/2011 annex II
N_{actual}	-	Actual efficiency grade of the fan based on an electrical input power of 10 kW at its point of optimum energy efficiency
N_{target}	-	Target efficiency grade at motor input power 10 kW
L_{pA}	dB(A)	A-rated suction-side or pressure-side acoustic pressure level
P_{spez}	Wh/1000m³	Specific power

Notes pertaining to the ErP evaluation

The identifier ErP2015 indicates that a fan meets the minimum efficiency factors of the respective level according to the ErP directive or the fan is not subject to the regulations of ErP directive (P_1 < 125 W). The actual efficiency in the efficiency optimum of the fan which is used for the ErP evaluation is called η_{statA}. In order to meet ErP requirements, this efficiency must reach a certain minimum value (target energy efficiency). The efficiency N is a parameter in the calculation of the target energy efficiency of the ErP directive. As a reference value for the required efficiency N_{nom} we also specify the actual efficiency N_{act} based on a motor input power of 10 kW.
All ErP-relevant data refers to measured data according to measurement category A, which was determined in the long housing from ZIEHL-ABEGG with inlet ring without guard grille, as per ISO 5801.

Size	B	D	D1	R1
200	52	200		13,5
250	85	254	257	10
300	80	306	326	16
315	80	316,5	327	27
350	87	356	367	35
400	100	400	410	35
450	110	451	463	45
500	118	503	517	45
560	135	559	576	45
630	150	634	653	55
710	167	711	728	95
800	195	797	814	100
910	205	914	930	100
1000	205	1000	1016	105
1250	340	1260	1347	105

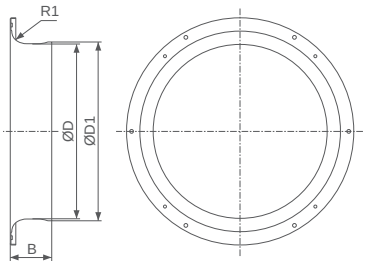

L-KL-3017

Conversion factors

Pressure

		SI-unit	Additional units		
		Pa (N/m²)	mbar	in.wg	psi (lbs./in²)
SI-unit	**Pa (N/m²)**	**1**	0.01	0.004015	0.000145
Additional units	**mbar**	100	**1**	0.401463	0.014503
	in.wg	249.10	2.49	**1**	0.036127
	psi (lbs./in²)	6894.76	68.95	27.68	**1**

Air flow

		SI-unit	Additional units		
		m³/s	m³/h	l/s	cfm
SI-unit	**m³/s**	**1**	3600	1000	2118.9
Additional units	**m³/h**	0.000277	**1**	0.277777	0.588583
	l/s	0.001	3.6	**1**	2.1189
	cfm	0.000472	1.698994	0.471943	**1**

Temperature

		SI-unit	Additional units
		°C	°F
SI-unit	**°C**	1	(°C × 1.8) + 32
Additional units	**°F**	(°F – 32) / 1.8	1

Dynamic pressure

Calculation of the dynamic pressure:

$$p_{fd} = k \cdot q_v^2$$

p_{fd}	Dynamic pressure at fan outlet in Pa
k	Constant
q_v	Air flow in m³/h

Example:

Type FN**050**-4EQ.4I.A7P1, Article no. 140084

Size	Constant
020	$4{,}7 \cdot 10^{-5}$
025	$1{,}7 \cdot 10^{-5}$
030	$8{,}6 \cdot 10^{-6}$
031	$7{,}5 \cdot 10^{-6}$
035	$4{,}7 \cdot 10^{-6}$
040	$2{,}9 \cdot 10^{-6}$
042	$2{,}4 \cdot 10^{-6}$
045	$1{,}8 \cdot 10^{6}$
050	$\mathbf{1{,}2 \cdot 10^{-6}}$
056	$7{,}7 \cdot 10^{-7}$
063	$4{,}6 \cdot 10^{-7}$
071	$2{,}9 \cdot 10^{-7}$
080	$1{,}9 \cdot 10^{-7}$
081	$1{,}1 \cdot 10^{-7}$
100	$7{,}5 \cdot 10^{-8}$
125	$3{,}0 \cdot 10^{-8}$

$p_{fd} = 1{,}2 \cdot 10^{-6} \cdot q_v^2$

Aerodynamics and Acoustics

Measurement method

The ´characteristic curve´ diagram shows the pressure increase Δp_{sF} in Pa as a function of the volume flow rate q_V in m^3/h.

Technical conditions of supply

The specified performance data meet the requirements for accuracy class **3** for AC fans and accuracy class **2** for ECblue fans in line with **DIN 24 166** and apply to the rated data and air performance curves at the rated voltage. The continuous line in the characteristic map represents the optimum reliable operating range for axial fans.

Fan test bench

The fan characteristic curves are determined on a combined test bench for acoustics and air performance.
The characteristic curves are measured in compliance with **DIN EN ISO 5801**and **AMCA 210-99**. The sound power levels are measured in compliance with **DIN EN ISO 3745** and **ISO 13347-3** using the enveloping surface measuring method.

The figure below shows an example of the measuring setup. The fan intake is installed in the measuring chamber at free intake and free exhaust (installation type A as per **DIN EN ISO 5801** or **AMCA 210-99**).

Air density

The air density and humidity are conditioned during the measurement using heat exchangers and kept largely constant. The characteristic curves shown refer to the measuring density. The mean measuring density is 1.16 kg/m^3.

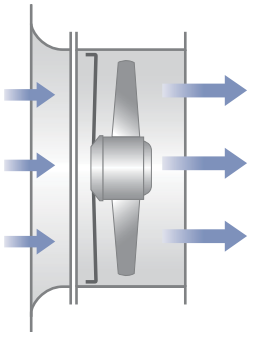

KL-1290a

Installation type A according to ISO 5801



Technology Centre (InVent)

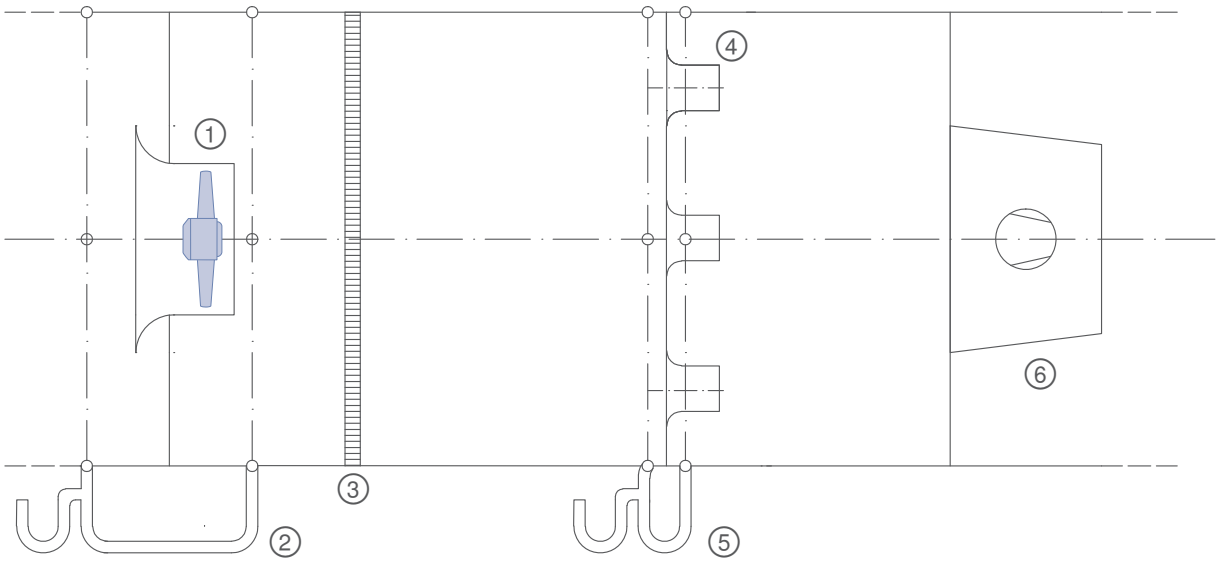

① Test fan
② p_{sF}
③ Flow straightener
④ Nozzles
⑤ Δp Differential pressure
⑥ Auxiliary fan

Noise level data

Unless otherwise indicated, this catalogue specifies the intake side, A-evaluated sound power levels L_{WA}.
The sound power levels are determined by using the enveloping surface method in compliance with **ISO 13347-3**, accuracy class **1** and/or **DIN EN ISO 3745**.

This is done by measuring the acoustic pressure level L_p of the individual third-octave bands at 12 points on the enveloping surface (Fig. Ia). The measured acoustic pressure levels for the third-octave bands are initially used to calculate the sound power level for the third-octave bands and then the intake side sound power level L_W. To do this, the fans are installed with a free intake (from the measuring chamber) and (air) outlet (into the surrounding area). The standard measurements are carried out without the need for additional parts, e.g. guard grille. The measuring equipment used complies with **DIN EN 61672**.

Because of the different weighting of the third-octave sound power level, the A-evaluation, which is typically carried out, takes into account the subjective nature of human sound perception. The A-tested sound power level is the standard variable used to assess the sound characteristics of technical equipment.

Calculation of pressure side sound power level and total sound power level

For axial fans, the pressure side sound power level is approximately equal to the intake side level. The total sound power level is calculated by adding up the power from the sound power levels of both the intake and the pressure side (see **DIN 45 635 Part 1, Appendix F, DIN EN ISO 3745**). Thus, it is approximately 3 dB higher than the intake side sound power level specified in the catalogue.

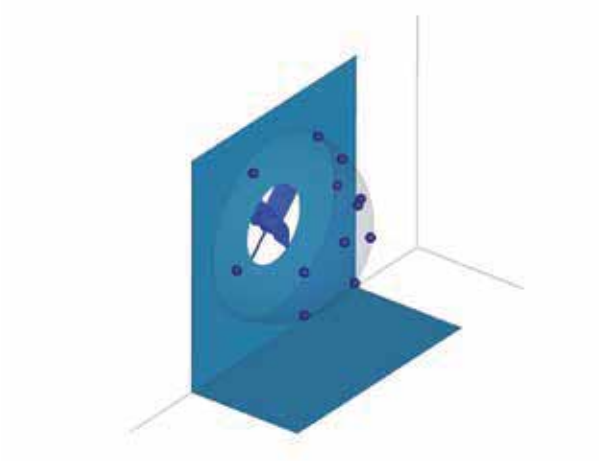

Fig.Ia: Position of microphones in relation to axial fans



Fig. Ib: Fan test-bench

Determination of total sound power level during the interaction of several sound sources

The total sound power level of several individual sound sources operating concurrently is calculated by adding the power of the individual levels in compliance with **DIN EN ISO 3745**. This equation is the basis for the diagrams in Fig. II and III.

To add up several sound sources with the same level, please see diagram (Fig. II) for complete level information; e.g. 6 identical sound sources operating concurrently results in a total level that is approx. 8 dB higher.

The total sound power level of two sound sources with different levels can be seen in diagram Fig. III. For example, two sound sources whose sound power levels differ by 4 dB produce a total sound power level that is around 1.5 dB higher than that of the louder sound source.

Determination of acoustic pressure level

The A-tested acoustic pressure level L_{pA} for rooms with average absorption capacity for a distance of 1m from the fan axis is calculated by subtracting 7 dB from the A sound power level L_{WA}. In most cases, this assumption is correct and provides a sufficient level of accuracy. However, the sound characteristics can be hugely influenced by the individual installation situation.
Absorption of the acoustic pressure level, depending on the distance with partial reflection, is shown in Fig. IV.

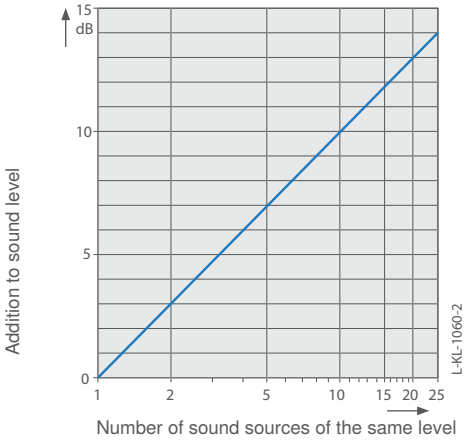

Fig. II: Addition of several sound sources

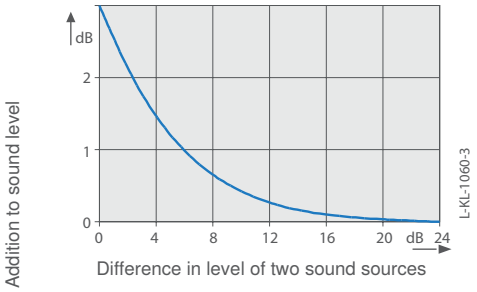

Fig. III: Sound sources of different levels

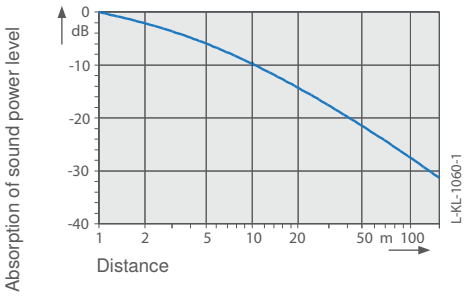

Fig. IV: Reduction of sound pressure level

Electrical connection and motor

Fan drive

The three-phase or single-phase AC external rotor motor integrated into the fan hub meets the requirements for circulating electrical machines set out in **DIN EN 60 034-1** (VDE 0530 Part 1).
AC technology:
The rated voltage for three-phase current is 400 V,
for single-phase AC motors 230 V.
EC technology:
The FE2owlet-ECblue axial fans are powered by a highly efficient EC motor with integrated commutation electronics. Depending on the version, the ECblue motors have a broad voltage range.
1~ 200-277 V, 50/60 Hz
3~ 200-240 V, 50/60 Hz
3~ 380-480 V, 50/60 Hz

Operation with frequency inverter

ZIEHL-ABEGG axial fans are suitable for operation with frequency inverters if the following requirements are met:
All-pole sine filters - as supplied by some inverter manufacturers - must be installed between the inverter and the motor (sinusoid output voltage - phase to phase, phase to protective earth). Request our technical information L-TI-0510 for more details.
du/dt filters (also known as motor or attenuation filters) may not be used instead of sine filters.
When using sine filters, there may be no need for screened motor power cables, metal terminal boxes or a second earth connection on the motor (consult the sine filter supplier).

Electrical connection

Voltage
The single-phase or three-phase AC motors are suitable for 400 V or 230 V and are continuously voltage controllable. Please pay attention to the data sheet.

Current
Motor current is dependent on the installation (i.e. flow situation and nozzle) and operation (i.e. operating point in connection with air density). For the definition of electrical installations, the following value is recommended: $I_{max} = I_N + \Delta I + \approx 30\%$

Motor connection
Mains connection via terminal box or connecting cable implemented as per dimensional drawings. Cable length tolerance ± 3 cm.

Terminal box
Terminal boxes are made of impact resistant and weather resistant plastic or die-cast aluminium.

All terminal boxes have two M20x1.5 cable inlets.

For FE2owlet and FE2owlet-ECblue axial fans in F design without guard grille, the terminal box is located on the outside on the flange ring. In the F design with guard grille, the terminal box is mounted on the front on the motor.

Connection cable
Heat and UV resistant halogen-free hose cables are used, marked by a colour code or connection designations.
The cable construction complies with VDE 0282 part 804 and is suitable for operating voltages of up to 690 V.
Temperature resistance -50 to +150 °C.
The ends of the connection are stripped for 10 cm and fitted with wire end ferrules.

Service capacitor
See system components chapter.

Connection diagrams

EC-Technology

KT00036A (EC074)

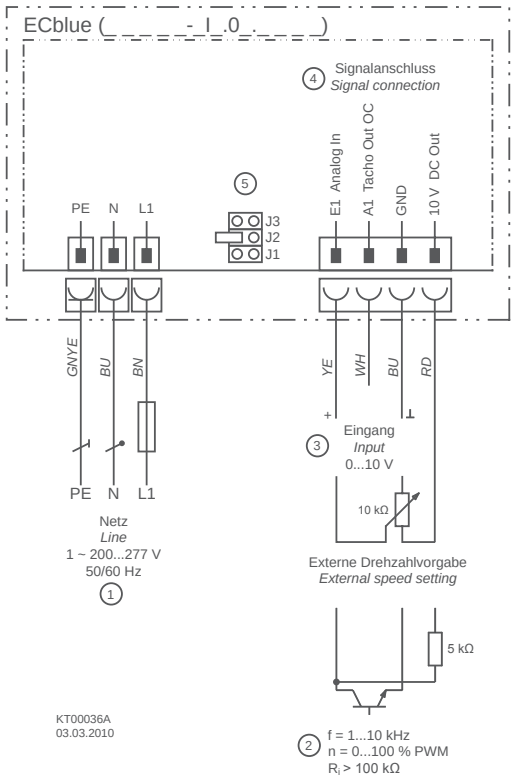

① Mains 1~ 200...277 V
② External speed preset: 0...100 % PWM
③ External speed preset: 0...10 V
④ Signal connection
⑤ Operating mode selection (J2 and J3) and reversal of direction of rotation (J1)

Connection diagrams

EC-Technology

1360-384 (EC090)

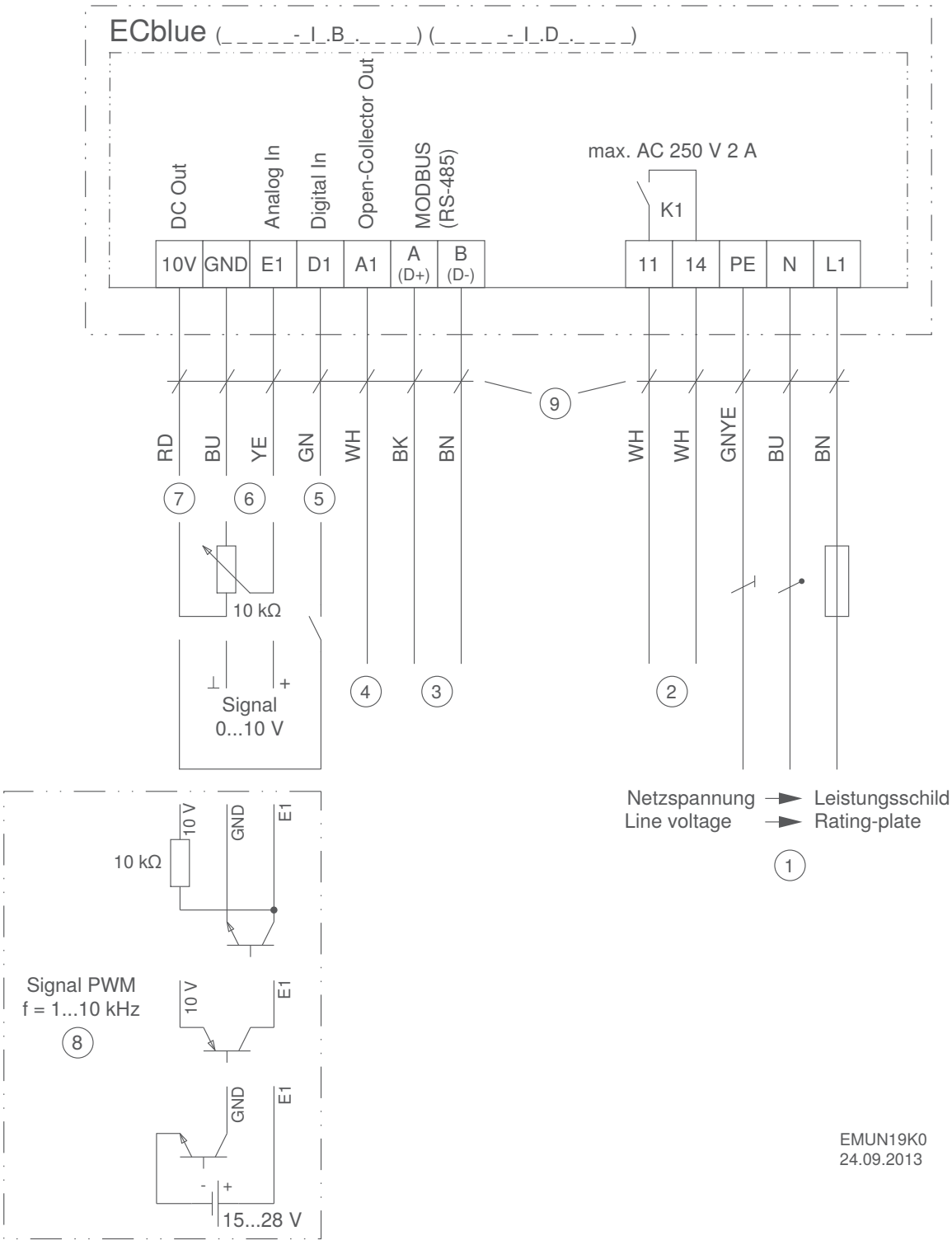

① Line voltage see rating-plate
② Relay output for fault indication (max. contact rating AC 250 V 2 A)
③ MODBUS (RS-485) interface
④ Open-Collector output status / tacho
⑤ Digital input for enable
⑥ Input for setting speed by 0...10 V signal / potentiometer (R_i > 100 kΩ)
⑦ Voltage supply 10 V DC (I_{max} 50 mA)
⑧ Setting speed by PWM signal (f = 1...10 kHz)
⑨ Version with connection cables

Connection diagrams

EC-Technology

1360-403 (EC116 / EC152)

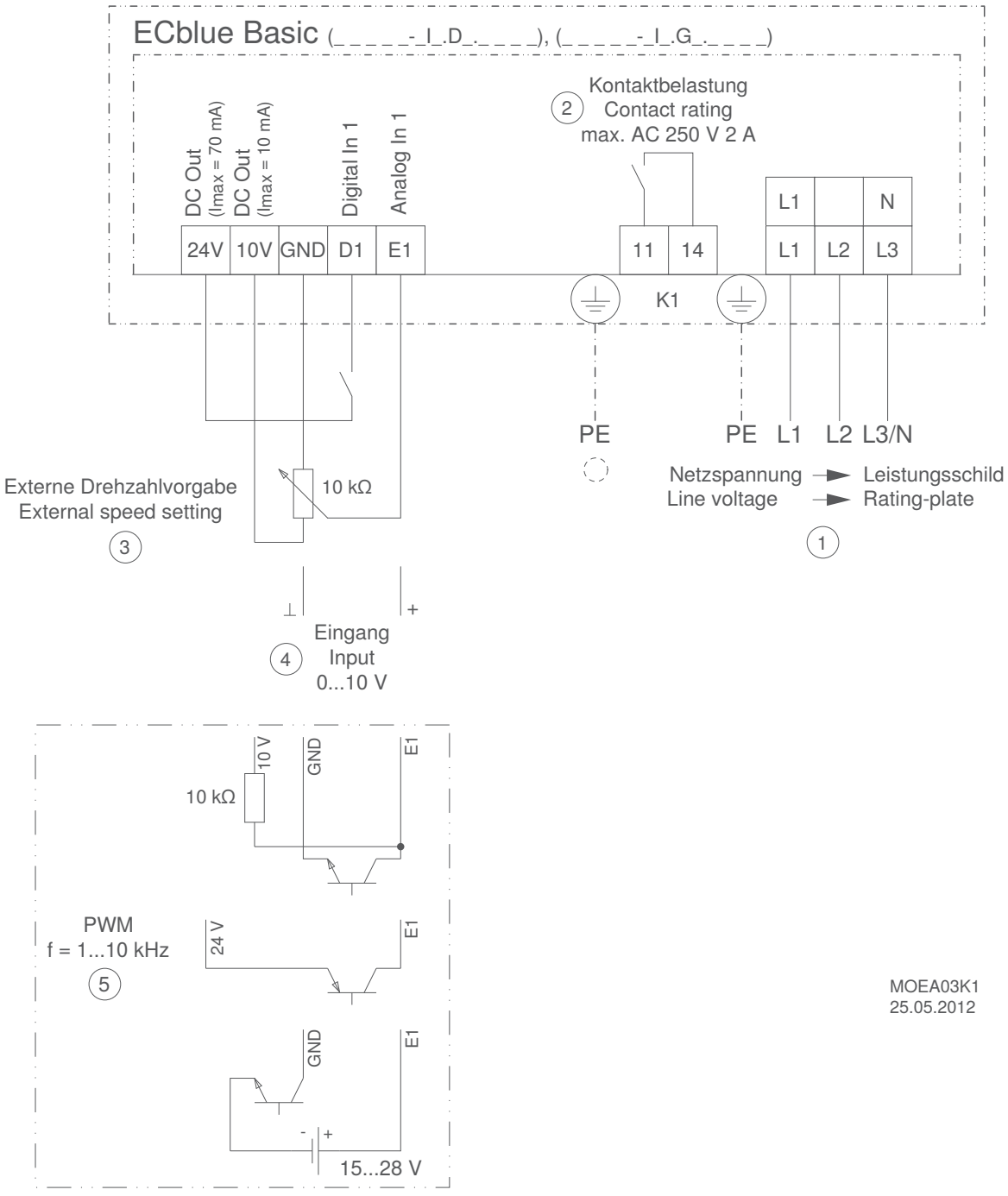

① line voltage
② contact load
③ external speed setting
④ input
⑤ PWM

Connection diagrams

AC-Technology

104XA

For 1~-motor with capacitor and thermostatic switch (if built in).
Airflow direction: V
Direction of rotation: clockwise

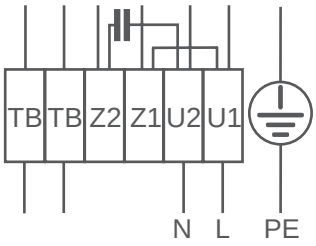

Cable colours:
U1 brown
U2 blue
Z1 black
Z2 orange
TB white

104XB

For 1~-motor with capacitor and thermostatic switch (if built in).
Airflow direction: A
Direction of rotation: counter clockwise

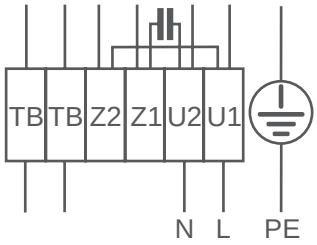

Cable colours:
U1 brown
U2 blue
Z1 black
Z2 orange
TB white

106XA

For 3~-motor with one speed and thermostatic switch (if built in).
Airflow direction: V
Direction of rotation: clockwise

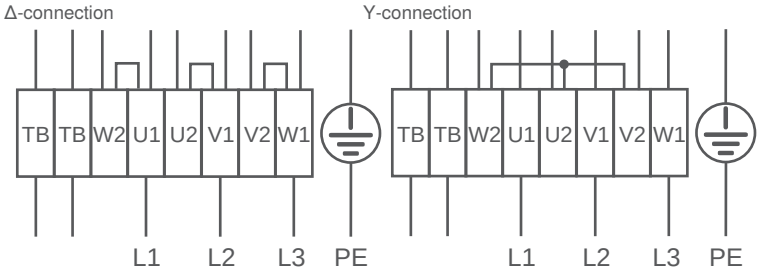

Cable colours:
U1 brown
V1 blue
W1 black
U2 red
V2 grey
W2 orange
TB white

106XB

For 3~-motor with one speed and thermostatic switch (if built in).
Airflow direction: A
Direction of rotation: clockwise

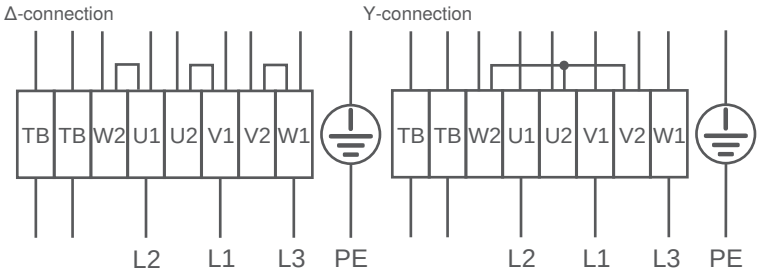

Cable colours:
U1 brown
V1 blue
W1 black
U2 red
V2 grey
W2 orange
TB white

108XA

For 3~-Motor with 2 speeds (Δ-/Y switch over) and thermostatic switch (if built in). Without bridge when using speed change-over switch.
Direction of air flow: V
Direction of rotation: Clockwise

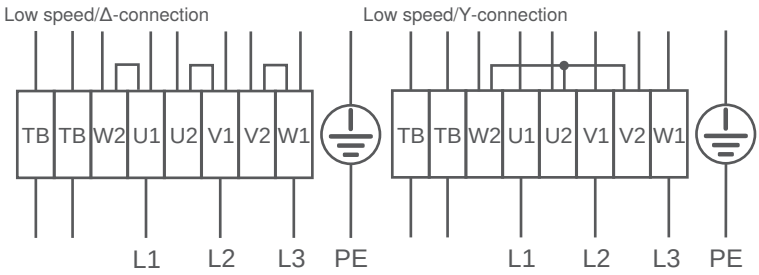

Cable colours:
U1 brown
V1 blue
W1 black
U2 red
V2 grey
W2 orange
TB white

108XB

For 3~ motor with 2 speeds (Δ-/Y switch over) and thermostatic switch (if built in). Without bridge when using speed change-over switch.
Direction of airflow: A
Direction of rotation: Counter clockwise

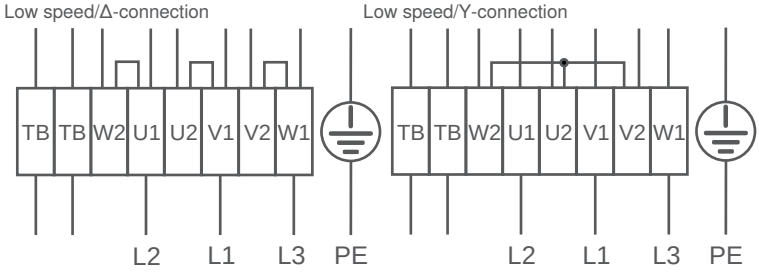

Cable colours:
U1 brown
V1 blue
W1 black
U2 red
V2 grey
W2 orange
TB white

177X

1~ Motor with condenser and thermostat switch.
FN Series
Airflow direction: A
Direction of rotation: Counter-clockwise rotation (looking at rotor)

FB Series
Airflow direction: A
Direction of rotation: clockwise rotation (looking at rotor)

Other speeds possible with capacitors connected in series.

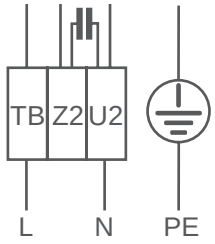

Cable colours:
U2 blue or grey
Z2 black
TB brown

Installation and usage information

Materials and corrosion protection

FE2owlet-ECblue, FE2owlet, ZAplus-ECblue and ZAplus axial fans have an impeller made of high performance composite material or aluminium.

Rotor and stator flange are made of sea water resistant aluminium alloy using a die-casting method.

The fan nozzles are made of hot-dipped thin sheet. ZAplus nozzles consist of high performance composite material.

Additional painting possible upon request and at an extra charge.

Depending on the fan size, motor suspensions are produced as wire support grids or a welded structure with flat steel struts.

The wire carrying grille and welded structure with flat steel struts are provided with weather resistant plastic coating.

Notify us of the area of application subject to increased climatic stress or use in wet rooms such as breweries, dairies or similar.

Installation position

The axial fans are usually suitable for all installation positions. For details please see the part-specific documentation.

Shaft horizontal	Shaft vertical	Shaft vertical
	Rotor above	Rotor below
H	Vo	Vu
		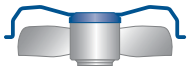

Airflow direction

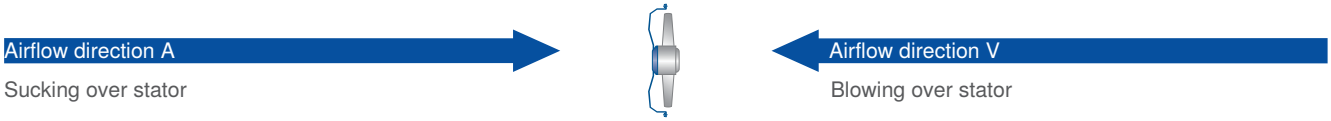

Sucking over stator

Blowing over stator

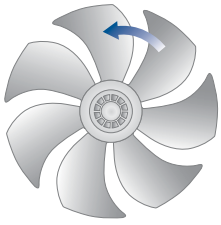

Direction of rotation counter clockwise looking at the rotor

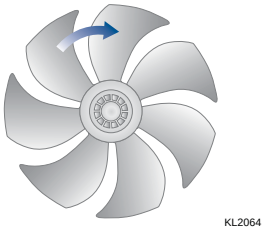

Direction of rotation clockwise looking at the rotor

Installation and usage information

Conditions for use and lifetime

Protective device
The fans may only be operated if installed appropriately for their purpose and when safety is ensured through protective devices as per DIN EN 13857 or ISO 13852 (DIN EN ISO 12100) or by other construction protection measures.

Condensation holes
According to the installation position Vo (rotor upwards) or Vu (rotor downwards), the condensation hole beneath must be open. In installation position H, condensation can flow through the seal gap between the stator and the rotor.

Operating mode
Constant operation (S1)

Lifetime
Thanks to the use of ball bearings with “lifetime lubrication”, the axial fan is maintenance-free. The grease lifetime value (L10h) lasts for approx. 30,000-40,000 hours in standard applications. In the case of long-lasting operation under extreme conditions (max. speed and max. bearing temperature), it is recommended to have the grease life checked by ZIEHL-ABEGG. The fan or motor is maintenance-free due to the use of ball bearings with “life-time lubrication”. Bearings must be changed at the end of the grease life. The grease life may be lower than the theoretical value (L10h) if particular operating conditions such as vibrations, humidity or soiling in the bearing, unfavourable control modes, etc. are present.

Guard grille

A guard grille can be included in the scope of delivery if the fan includes a motor suspension or motor suspension with wall ring.
The guard grille is on the suction or pressure side of the fan, depending on airflow direction.

The chapter on system components contains separate guard grilles, which can be installed on the exhaust or suction sides of the fan as required, depending on installation position and complying with the safety requirements as per DIN EN ISO 13857.
Please observe the section “Influence of guard grilles”.



Axial fan FN, design Q

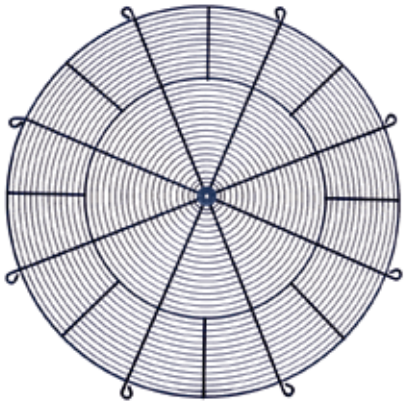

Guard grille system component, blow out side

Influence on guard grille

Safety distances set forth to keep out of reach of hazardous areas

DIN EN ISO 13857 sets forth the required safety distances to prevent upper limbs from getting into hazardous areas.

The preferred “protective construction” used on axial fans is a guard grille.As a standard feature, the vast majority of our axial fans (S, K, D, W, Q designs) are equipped with a guard grille integrated into the suspension. For fan types featuring a suspension without integrated guard grille, a separate guard grille is available as an optional accessory.
The guard grille results in a resistance to the conveyed airflow, which manifests itself in the pressure loss Δp_{VG}.
The pressure loss Δp_{VG} increases in a linear relationship with a coefficient of resistance ζ_G or squared with the conveyed volume flow rate q_V.

$$\Delta p_{VG} = \zeta_G \bullet \frac{\rho}{2} \bullet \frac{16 \bullet q_v^2}{\pi^2 \bullet d_n^4}$$

The coefficient of resistance ζ_G is largely determined by the screen design (mesh size, ring spacing), which is set forth in DIN EN ISO 13857. The coefficient of resistance for the ZIEHL-ABEGG guard grilles, which was obtained in a series of tests on FC series fans, is within the following range: ζ_G = 0.2-0.4. This covers installation of the guard grille on the intake side as well as the pressure side. The following numerical equation provides an approximate estimate of the pressure loss caused by the guard grille in [Pa]:
$\Delta p_{VG} = K_{VG} \times 10^{-8} \times q_v^2$

The loss factor K_{VG} depends on the nominal fan diameter d_n and can bee seen in the above diagram.The volume flow rate q_v is inserted in [m^3/h].

Note:
FANselect selection program supplies all characteristic curves, also including the influence of the guard grille. See http://www.fanselect.net/.

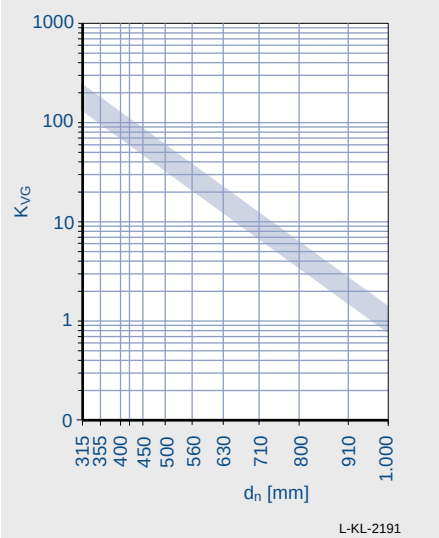

Factor for loss attributable to the grating K_{VG} as a function of the diameter $d_{n\ of\ the\ fan}$

Installation instructions

Airflow conditions
When installing fans in the devices, favourable airflow conditions must be maintained; this also applies to compact designs.

The following installation recommendations (Fig. I and II) indicate the required minimum distances.

Fig. I free air intake, connected to outlet side

Fig. II free air outlet, connected to intake side

Fig. III Air inlet nozzles
Please observe recommended gap s between fan blade and inner edge of nozzle

Fig. IV Influence of nozzle shape, comparison of characteristic curves (Fig. IV)
① Full nozzle (Design Q)
② Short nozzle, see Accessories

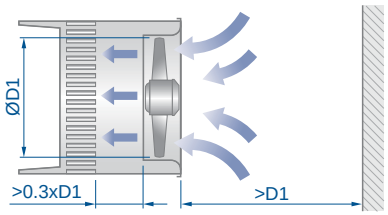

L-KL-2508

Fig. I

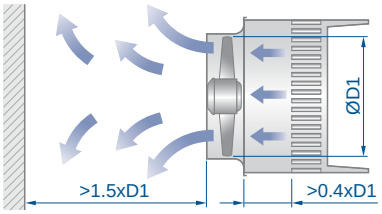

L-KL-2508/1

Fig. II

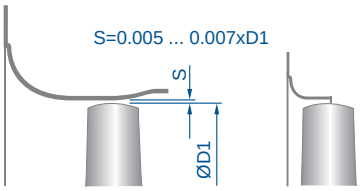

L-KL-2507

Fig. III

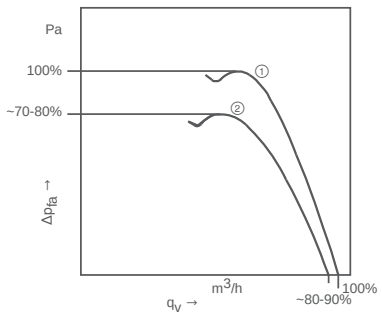

KL2022

Fig. IV

Installation / application examples

Fan-design FN_ _ _-_ _K

① Fan mounting plate with short bell mouth
② Axial fan for refrigerant technology

Space saving construction due to the mounting plate with short bell mouth. Performance can be reduced by using a short bell mouth.

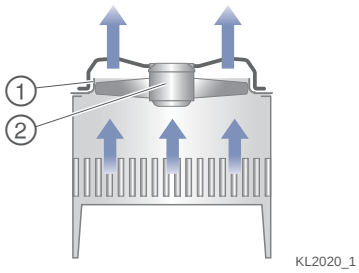

Example: Application with short nozzle for refrigeration

Fan-design FN_ _ _-_ _Q

① Wall plate or fan mounting plate with full bell mouth
② Axial fan for refrigerant technology

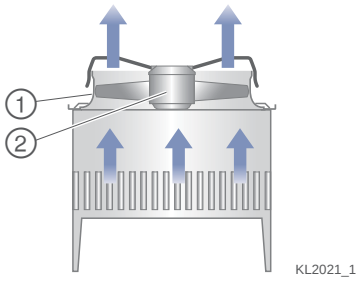

Example: Application with full nozzle for refrigeration

Fan-design FN_ _ _-_ _W

① Fan mounting plate
② Axial fan for heating technology

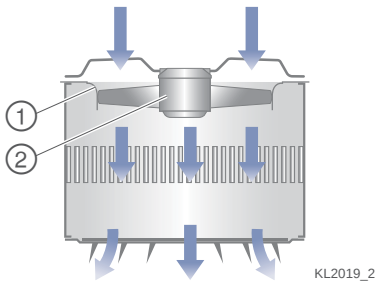

Example: Application with short nozzle for air heater

Usage examples



Small refrigeration units with ZIEHL-ABEGG fans



Condenser with axial fans



Condenser with axial fans

ZIEHL-ABEGG Germany

Field representatives

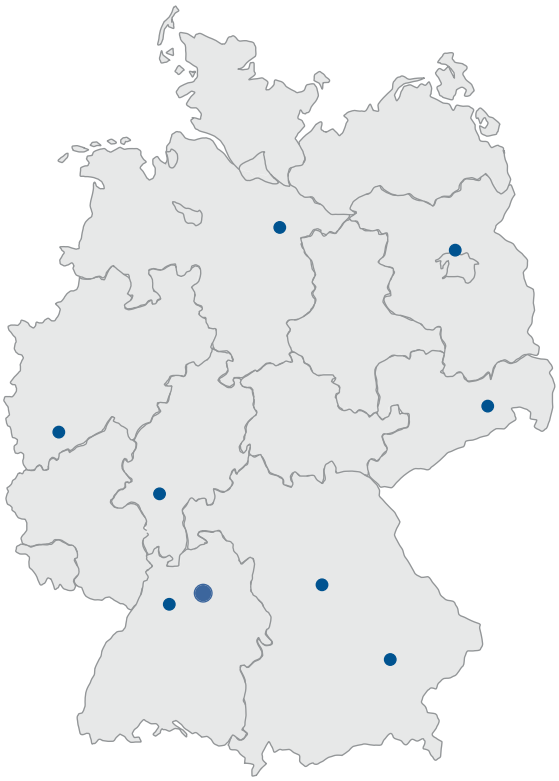

Headquarters
ZIEHL-ABEGG SE
Heinz-Ziehl-Straße
74653 Künzelsau
Tel. 07940 16-0
Fax 07940 16-300
info@ziehl-abegg.de
www.ziehl-abegg.com

Bavaria north
Michael Böhme
91126 Rednitzhembach
Phone 09122 8850964
Mobile 0160 90643765
Fax 09122 8850965
michael.boehme@
ziehl-abegg.de

Baden-Württemberg
Tomas Pilic
74257 Untereisesheim
Phone 07132 3417922
Mobile 0171 7610136
Fax 07132 3417933
tomas.pilic@ziehl-abegg.de

Hessen, Rhineland Palatinate, Saarland
Harald Keim
64859 Eppertshausen
Phone 06071 3923385
Mobile 0171 7655880
Fax 06071 3923386
harald.keim@ziehl-abegg.de

North Rhine-Westphalia, Lower Saxony West
Hans-Peter Rommerscheidt
53111 Bonn
Phone 0228 9628754
Mobile 0170 7946555
Fax 0228 9628756
hans-peter.rommerscheidt@
ziehl-abegg.de

Bavaria South
Willibald Walter
83533 Edling
Mobile 0175 2911908
willibald.walter@ziehl-abegg.de

Lower Saxony, north, east and south, Bremen, Hamburg, Schleswig-Holstein
Kai Städing
29559 Wrestedt/Nettelkamp
Phone 05802 9912
Mobile 0171 3044458
Fax 05802 9913
kai.staeding@ziehl-abegg.de

Mecklenburg-West Pomerania, Berlin, Brandenburg middle and north, Saxony-Anhalt middle and north
Wolfgang Kull
16348 Wandlitz
Phone 033056 82838
Mobile 0171 2295159
Fax 033056 82839
wolfgang.kull@ziehl-abegg.de

Saxons, Thuringia, Brandenburg south, Saxony-Anhalt south
Harald Höntsch
01219 Dresden
Phone 0351 8494892
Mobile 0170 9249851
Fax 0351 8584781
harald.hoentsch@
ziehl-abegg.de

ZIEHL-ABEGG global

Subsidiaries, sales partners



Albania
supported by
ZIEHL-ABEGG Ges.m.b.H.
AUSTRIA

Argentina
supported by
ZIEHL-ABEGG do Brasil Imp., Exp. e Com. de Equipamentos de Ventilação Ltda.
BRASIL

Armenia
supported by
OOO ZIEHL-ABEGG
RUSSIA

Australia
ZIEHL-ABEGG Australia Pty Ltd (VIC)
181 Calarco Drive
Derrimut
VICTORIA 3030
AUSTRALIA
Phone +61 3 99310899
Fax +61 3 99310499
www.ziehl-abegg.com.au
info@ziehl-abegg.com.au

Austria
ZIEHL-ABEGG Ges.m.b.H.
Prinz Eugen Strasse 19
4020 LINZ
AUSTRIA
Phone +43 732 7850950
Fax +43 732 785702
www.ziehl-abegg.at
info@ziehl-abegg.at

Azerbaijan
supported by
ZIEHL-ABEGG Vantilator ve Motor
San ve Tic. Ltd. Sti.
TURKEY

Belarus
supported by
OOO ZIEHL-ABEGG
RUSSIA

Belgium
supported by
ZIEHL-ABEGG Benelux B.V.
NETHERLANDS

Bolivia
supported by
ZIEHL-ABEGG do Brasil Imp., Exp. e Com. de Equipamentos de Ventilação Ltda.
BRASIL

Bosnia-Herzegovina
supported by
ZIEHL-ABEGG Ges.m.b.H.
AUSTRIA

Brazil
ZIEHL-ABEGG do Brazil Imp., Exp. e Com. de Equipamentos de Ventilação Ltda.
Rua Osasco, 1.295
Centro Empresarial Anhanguera
Cajamar -SP - CEP 07753-040
BRAZIL
Phone + 55 11 2898-0827
www.ziehl-abegg.com.br
info@ziehl-abegg.com.br

Bulgaria
supported by
ZIEHL-ABEGG Ges.m.b.H.
AUSTRIA

Canada
supported by
ZIEHL-ABEGG Inc.
USA

Chile
supported by
ZIEHL-ABEGG do Brasil Imp., Exp. e Com. de Equipamentos de Ventilação Ltda.
BRASIL

China
ZIEHL-ABEGG Mechanical and Electrical Equipment (Shanghai)
Co. Ltd.
No. 65 Hong Mu Dan Road
Xinbang Town
Songjiang District
SHANGHAI 201605
CHINA
Phone +86 21 57893991
Fax +86 21 57893932
www.ziehl-abegg.cn
info@ziehl-abegg.com.cn

Colombia
ZIEHL-ABEGG fans and drives
Carrera 7B No. 126 – 49
Oficina 104 Bogotá
COLOMBIA

Croatia
supported by
ZIEHL-ABEGG Ges.m.b.H.
AUSTRIA

Czech Republic
ZIEHL-ABEGG s.r.o.
Škrobárenská 484/8
617 00 BRNO
Czech REPUBLIC
Phone +420 5 45421690
Fax +420 5 45421699
www.ziehl-abegg.cz
sales@ziehl-abegg.cz

Denmark
ZIEHL-ABEGG Danmark ApS
Pakhusgården 40
5000 Odense C
DENMARK
Phone +45 66 155800
Fax +45 66 155810
www.ziehl-abegg.com
carsten.sundman@ziehl-abegg.com

Ecuador
supported by
ZIEHL-ABEGG do Brasil Imp., Exp. e Com. de Equipamentos de Ventilação Ltda.
BRASIL

Estonia
supported by
ZIEHL-ABEGG Finland OY
FINLAND

Finland
ZIEHL-ABEGG Finland OY
Olarinluoma 11
02200 ESPOO
FINLAND
Phone +358 10 40068-00
Fax +358 10 40068-10
www.ziehl-abegg.fi
info@ziehl-abegg.fi

France
ZIEHL-ABEGG France Sarl
Rue de la gare
01800 VILLIEU
FRANCE
Phone +33 474 4606-20
Fax +33 474 611958
www.ziehl-abegg.fr
societe@ziehl-abegg.fr

Georgia
supported by
ZIEHL-ABEGG Vantilator ve Motor
San ve Tic. Ltd. Sti.
TURKEY

Great Britain
ZIEHL-ABEGG UK Ltd.
Springfield Business Park
Lonebarn Link, Unit 1
CHELMSFORD, ESSEX CM2 5AR
GREAT BRITATIN
Phone +44 1245 4490-10
Fax +44 1245 4490-11
www.ziehl-abegg.co.uk
info@ziehl-abegg.co.uk

Greece
supported by
ZIEHL-ABEGG SE
GERMANY

Hungary
supported by
ZIEHL-ABEGG Ges.m.b.H.
AUSTRIA
Phone +36 30 821 5226

Iceland
Varmi HF
Laugavegi 168
0105 REYKJAVIK
ICELAND
Phone +354 5517560
Fax +354 5624110
www.varmi.is
varmi@varmi.is

India
ZIEHL-ABEGG India Pvt Ltd.
GAT No.679/2/3,
Kuruli Village
Tal Khed Dist.
PUNE - 410501
INDIA
Phone +91 21 3567 9679
Fax +91 21 3567 9680
www.ziehl-abegg.in
vikas.kundra@ziehl-abegg.com

Indonesia
ZIEHL-ABEGG SEA Pte. Ltd.
Indonesia Representative Office
Heartline Center Building,
2nd Floor, No.201,
Jl. Permatasari 1000, Villa Permata
Lippo Karawaci, Tangerang 15810
INDONESIEN
Phone +62 21 5988181
Fax +62 21 5988181
www.ziehl-abegg.sg
rudy.susanto@ziehl-abegg.com.sg

Iraq
supported by
ZIEHL-ABEGG Vantilator ve Motor
San ve Tic. Ltd. Sti.
TURKEY

Ireland
supported by
ZIEHL-ABEGG UK Ltd.
GREAT BRITAIN

Italy
ZIEHL-ABEGG Italia S.r.l.
Via Primo Maggio 10
30031 DOLO (VE)
ITALY
Phone +39 041 5130-311
Fax +39 041 5131-953
www.ziehl-abegg.it
info@ziehl-abegg.it

Japan
ZIEHL-ABEGG Japan Co., Ltd.
5F Minami-Shinagawa N-Building,
2-2-10 Minami-Shinagawa
Shinagawa-ku, TOKYO 140-0004
JAPAN
Phone +81 3 4520 5415
Fax +81 3 4520 5416
www.ziehl-abegg.com/jp
info@ziehl-abegg.jp

Jordan
supported by
ZIEHL-ABEGG Vantilator ve Motor
San ve Tic. Ltd. Sti.
TURKEY

Kazakhstan
supported by
OOO ZIEHL-ABEGG
RUSSIA

Korea
Jung Air Technics Co., Ltd.
#831, Hyundai Etrebeau Bldg.
852, Janghang-Dong, Ilsan-Ku
GOYANG-CITY (411-837)
KOREA
Phone +82 31 9033071
Fax +82 31 9033072
www.jungairtechnics.com
jat@nuri.net

Kyrgyzstan
supported by
OOO ZIEHL-ABEGG
RUSSIA

Latvia
supported by
ZIEHL-ABEGG Polska Sp. z o.o.
POLAND

Lithuania
supported by
ZIEHL-ABEGG Polska Sp. z o.o.
POLAND

Macedonia
supported by
ZIEHL-ABEGG Ges.m.b.H.
AUSTRIA

Malaysia
supported by
ZIEHL-ABEGG SEA Pte. Ltd.
SINGAPORE

Mexico
ZIEHL-ABEGG Inc.
Torre IBS
Lázaro Cárdenas 1007 Pte.
Planta Baja, Ofcn # 127
Residencial Santa Bárbara
66266 San Pedro Garza García, NL
MEXIKO
Telefon +52 (81) 8220 9065
http://www.ziehl-abegg.us
info@ziehl-abegg.us

Moldova
supported by
ZIEHL-ABEGG Ges.m.b.H.
AUSTRIA

Montenegro
supported by
ZIEHL-ABEGG Ges.m.b.H.
AUSTRIA

Netherlands
ZIEHL-ABEGG Benelux B.V.
Veldweg 20c
Postbus 36
5320 AA HEDEL
NETHERLANDS
Phone +31 73 594 7000
Fax +31 73 594 7009
www.ziehl-abegg.nl
info@ziehl-abegg.nl

New Zealand
supported by
ZIEHL-ABEGG Australia Pty Ltd (VIC)
AUSTRALIA

Norway
supported by
ZIEHL-ABEGG Sverige AB
SWEDEN

Paraguay
supported by
ZIEHL-ABEGG do Brasil Imp., Exp. e Com. de Equipamentos de Ventilação Ltda.
BRASIL

Peru
supported by
ZIEHL-ABEGG do Brasil Imp., Exp. e Com. de Equipamentos de Ventilação Ltda.
BRASIL

Philippines
supported by
ZIEHL-ABEGG SEA Pte. Ltd.
SINGAPORE

Poland
ZIEHL-ABEGG Polska Sp. z o.o.
ul. Sochaczewska 13
01-327 WARSZAWA
POLAND
Phone +48 22 6654933
Fax +48 22 6640134
www.ziehl-abegg.pl
biuro@ziehl-abegg.pl

Portugal
supported by
ZIEHL-ABEGG Ibérica S.L.
SPAIN

Romania
supported by
ZIEHL-ABEGG Ges.m.b.H.
AUSTRIA

Russia
OOO ZIEHL-ABEGG
34/building 3
Khotovskaya Str.
Schelkovo
141101 MOSCOW REGION
RUSSIA
Phone +7 495 2215665
Fax +7 495 2215665
www.ziehl-abegg.ru
info@ziehl-abegg.ru

Serbia
supported by
ZIEHL-ABEGG Ges.m.b.H.
AUSTRIA

Singapore
ZIEHL-ABEGG SEA Pte. Ltd.
57 Ubi Avenue 1
#05-04 Ubi Centre
SINGAPORE 408936
SINGAPORE
Phone +65 67482587
Fax +65 67487357
www.ziehl-abegg.sg
info@ziehl-abegg.com.sg

Slovakia
supported by
ZIEHL-ABEGG s.r.o.
CZECH REPUBLIC

Slovenia
supported by
ZIEHL-ABEGG Ges.m.b.H.
AUSTRIA

South Africa
ZIEHL-ABEGG South Africa (Pty) Ltd.
51 Loper Road
Spartan / Aeroport
Kempton Park
JOHANNESBURG
SOUTH AFRICA
Phone +27 11 9744211
Fax +27 11 9747970
www.ziehl-abegg.co.za
info@ziehl-abegg.co.za

ZIEHL-ABEGG global

Subsidiaries, sales partners

Spain
ZIEHL-ABEGG Ibérica S.L.
C/ Calidad 58
Polígono Industrial Los Olivos
28906 GETAFE (MADRID)
SPAIN
Phone +34 91 2953008
Fax +34 91 2953014
www.ziehl-abegg.es
info@ziehl-abegg.es

Sweden
ZIEHL-ABEGG Sverige AB
Kvartsgatan 11
749 40 ENKÖPING
SWEDEN
Phone +46 171 8588-0
Fax +46 171 8588-1
www.z-abegg.se
info@z-abegg.se

Switzerland
ZIEHL-ABEGG Schweiz AG
Limmatstrasse 12
8957 SPREITENBACH
SWITZERLAND
Phone +41 56 41850-10
Fax +41 56 41850-15
www.ziehl-abegg.ch
info@ziehl-abegg.ch

Syria
supported by
ZIEHL-ABEGG Vantilator ve
Motor
San ve Tic. Ltd. Sti.
TURKEY

Taiwan
Tuntos Enterprise Co. Ltd.
No. 23-1, Alley 10, Lane 437,
Pa-Der Road, Sec 2,
TAIPEI, TAIWAN R.O.C.
TAIWAN
Phone +886 2 27512135
Fax +886 2 27775343
www.tuntos.com.tw
tuntos@ms23.hinet.net

Tajikistan
supported by
OOO ZIEHL-ABEGG
RUSSIA

Thailand
supported by
ZIEHL-ABEGG SEA Pte. Ltd.
SINGAPORE

Turkey
ZIEHL-ABEGG Vantilator ve
Motor
San ve Tic. Ltd. Sti.
Atatürk Mah. Firat Bulvari
Gardenya Plaza 3. Binasi
Kat:3 Ofis No: 17
34758 ATAŞEHIR-İSTANBUL
TURKEY
Phone +90 216 5808250
Fax +90 216 5809530
www.ziehl-abegg.com.tr
omur.aydogan@ziehl-abegg.
com.tr

Turkmenistan
supported by
ZIEHL-ABEGG Vantilator ve
Motor
San ve Tic. Ltd. Sti.
TURKEY

Ukraine
ZIEHL-ABEGG Ukraine Ltd
46 Budenogo str.
08700 OBUHOV, KIEV REGION
UKRAINE
Phone +38 067 4637958
Fax +38 044 4927409
ua.ziehl-abegg.com
info@ziehl-abegg.com.ua

Uruguay
supported by
ZIEHL-ABEGG do Brasil Imp.,
Exp. e Com. de Equipamentos
de Ventilação Ltda.
BRASIL

USA
ZIEHL-ABEGG Inc.
719 N. Regional Road
GREENSBORO, NC 27419
USA
Phone +1 336 8349339
Fax +1 336 8349340
www.ziehl-abegg.us
info@ziehl-abegg.us

Uzbekistan
supported by
OOO ZIEHL-ABEGG
RUSSIA

Venezuela
supported by
ZIEHL-ABEGG do Brasil Imp.,
Exp. e Com. de Equipamentos
de Ventilação Ltda.
BRASIL

Vietnam
supported by
ZIEHL-ABEGG SEA Pte. Ltd.
SINGAPORE

General notes

The information and data contained in this catalogue were composed to the best of our best ability and do not absolve the user from its duty to check the suitability of the products with respect to its intended application.

ZIEHL-ABEGG SE reserves the right to make design changes, which are used for continuous technical improvement.

The customer is obligated to inform the supplier about general information concerning the intended use, the type of installation, the operating conditions and any other conditions that need to be taken into consideration if the order is not based on catalogue information.

Copyright

ZIEHL-ABEGG SE reserves in its entirety the copyright of this catalogue. The catalogue is intended for proper use as intended and neither the catalogue, its content nor extracts may be passed on to third parties without our express written consent.

The Royal League



© ZIEHL-ABEGG SE - 00703770 - MA - 02/2016 - 4.000 - Dta - Subject to technical modifications

ZIEHL-ABEGG

ZIEHL-ABEGG SE Heinz-Ziehl-Straße 74653 Künzelsau +49 79 40 16 - 0 info@ziehl-abegg.com ziehl-abegg.com